Feb. 26, 1935. L. S. ADAMS 1,992,800

RAILWAY-AIRPLANE TRANSFER APPARATUS

Original Filed Dec. 11, 1929 2 Sheets-Sheet 1

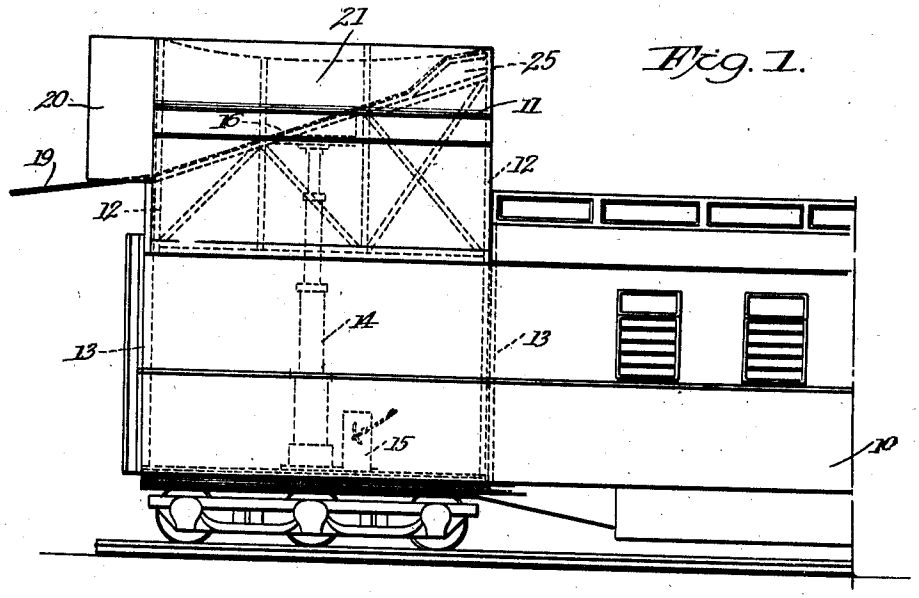

Fig. 1.

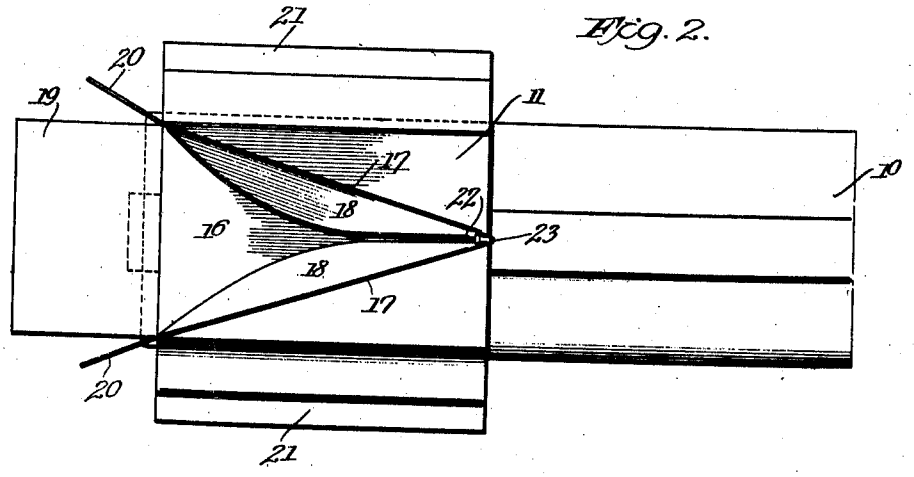

Fig. 2.

Inventor

Lytle S. Adams.

By Emery, Booth, Vanney & Holcombe

his Attorneys

Feb. 26, 1935. L. S. ADAMS 1,992,800

RAILWAY-AIRPLANE TRANSFER APPARATUS

Original Filed Dec. 11, 1929 2 Sheets-Sheet 2

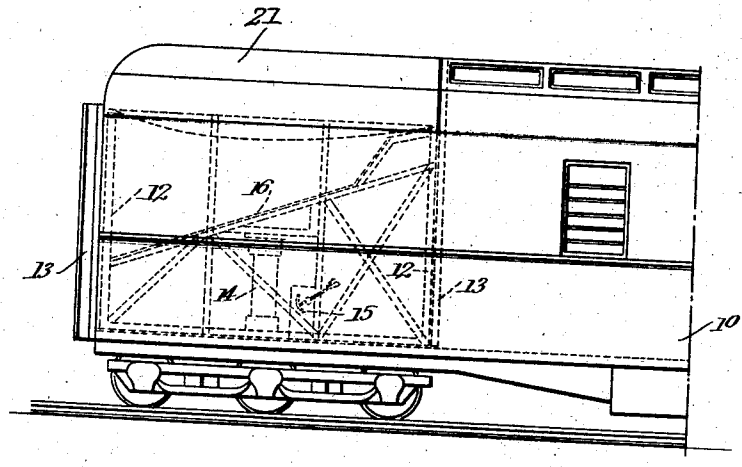

Fig. 3.

Fig. 6.

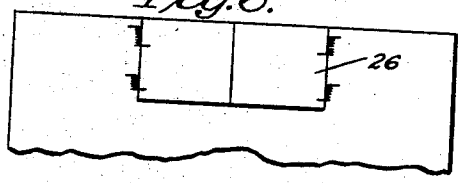

Fig. 4.

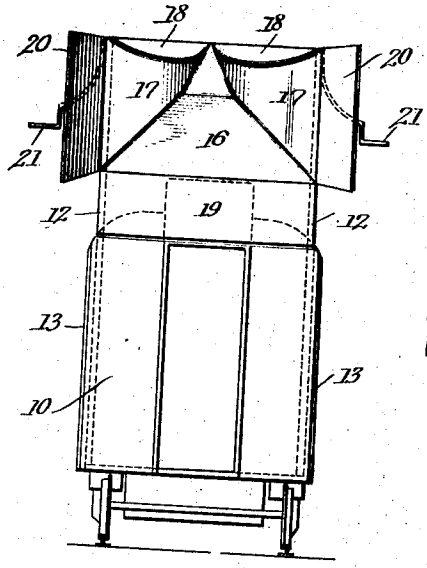

Fig. 5.

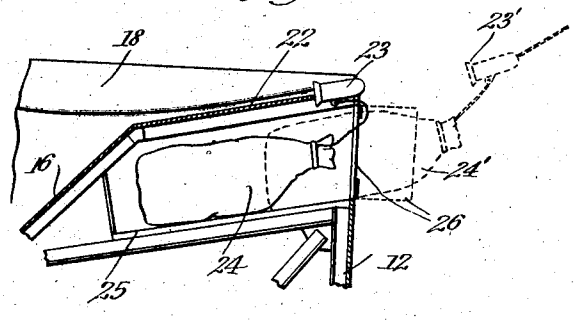

Inventor

Lytle S. Adams.

By Emery, Booth, Varney & Holcombe

his Attorneys

Patented Feb. 26, 1935 1,992,800

UNITED STATES PATENT OFFICE

1,992,800

RAILWAY-AIRPLANE TRANSFER APPARATUS

Lytle S. Adams, New York, N. Y.

Application December 11, 1929, Serial No. 413,373
Renewed July 23, 1934

14 Claims. (Cl. 258—1)

This invention relates to dropping and picking up mail or packages to transfer them to or from a moving railway car or other vehicle by an airplane while flying overhead, and aims to effect such exchange safely and with facility and assurance.

In my prior patents, Nos. 1,758,800, dated May 13, 1930; 1,818,835, dated August 11, 1931; and 1,825,329, dated September 29, 1931, I have shown devices for enabling a moving airplane to pick up a package or load from the ground by means of a trailing grappling line or cable suspended from a reel on the airplane.

This invention employs similar apparatus for effecting the exchange of air mail and parcel post packages or other loads between a moving train or vehicle on the ground and the airplane and comprises suitable devices located on a ground vehicle for cooperating with the grappling line and airplane mechanism.

Further aims and advantages of the invention appear in connection with the following description of the illustrative embodiment shown in the accompanying drawings, wherein

Fig. 1 is a side elevation of a portion of a railway car equipped with a hopper and carrier exchange device for receiving the articles dropped by the airplane and holding those to be picked up, in raised position to cooperate with the grappling device suspended from the plane;

Fig. 2 is a plan view of the same;

Fig. 3 is a view similar to Fig. 1 showing the hopper and associated parts lowered in normal traveling position;

Fig. 4 is an end elevation of the car and apparatus in raised position as in Figs. 1 and 2;

Fig. 5 is an enlarged detail side view of the carrier exchange portion of the apparatus; and

Fig. 6 is a diagrammatic view of the article discharge doors.

The car 10 illustrated in the drawings is similar to those in common use in the railway postal service, one end supporting the hopper 11 and hydraulic elevating mechanism for operating it, although this type of car and location for the mail transfer apparatus is not essential.

The hopper comprises a rectangular frame 12 arranged to slide vertically in suitable guides 13 built into the car walls, a telescoping plunger 14 or system of plungers operated by means of a suitable pump 15 being provided for elevating and lowering it, as shown in Figs. 1 and 3. The hopper has sloping bottom 16 and converging side walls 17 provided with inturned downwardly sloping flanges 18 along their top edges. The bottom and sides are fitted with hinged extensions 19, 20, adapted to be swung out to the rear of the hopper in its raised position to guide the trailing carrier and mail or package sack into the open end of the hopper as the plane passes overhead along the line of movement of the train.

The extensions 19, 20, are folded across the open end of the hopper prior to being lowered, and the hopper is covered in its lowered position by the roof sections 21, which are pivoted to its upper side edges and opened out in raised position to completely expose its top.

The forward end of the hopper bottom slopes up sharply to an apex where the side walls approach each other closely, forming a chute 22 through which the suspended cable and grapple device may pass, as described in my prior Patent No. 1,758,880, dated May 13, 1930, for example, thereby detaching the descending carrier (not shown) which is left with its attached load in the hopper, and picking up the waiting carrier 23 and attached sack 24 (see Fig. 5) and pulling the latter out of the compartment 25 provided for it in the hopper frame below the chute 22, the spring hinged swinging doors 26 being arranged (as shown diagrammatically in Fig. 6) to open easily for this purpose. The positions of the doors 26, carrier 23' and sack 24' in Fig. 5 illustrate this action.

The operation of the apparatus requires no special skill on the part of the car screw, it only being necessary to raise the hopper, open the roof covers 21 and side and bottom extensions 20, 19, and set the waiting carrier 23 in place in the chute 22, with the attached sack 24 in the compartment 25. When the airplane passes overhead the pilot lowers the trailing cable and grapple device with the attached carrier and sack and guides the plane so that the sack and carirer are caught in the hopper, where they will be automatically detached. The speed of the plane being greater than that of the car, the grapple will be pulled through the chute 22, pick up the waiting carrier 23 automatically, and thereby pull the attached sack 24 out of the compartment and clear of the car. At the same time the car crew raise the bottom extension 19 and close the side wall extensions 20 to secure the detached sack in the hopper, following which the hopper may be lowered.

The advantages of the invention in providing for exchange of air mail and packages between a moving train and flying airplane are obvious in expediting deliveries along the route of the train and in enabling mail to be dispatched promptly by air mail from local stations.

Similarly, on routes not served by railroad, large self-propelled vans or other vehicles may be similarly equipped for collecting and distributing local mail and express in connection with an air mail trunk line.

The invention may also be applied to refueling airplanes en route, thereby enabling them to carry a larger paying load than would otherwise be safe or even possible on long runs.

The invention is not restricted to the details of construction of the illustrative apparatus, but what is claimed is as follows.

I claim:

1. A traveling vehicle for an airplane exchange system, provided with a vertically movable hopper having an open end and a substantially closed end, the bottom and side walls converging towards the closed end, to provide a chute for guiding an airplane suspended trailing grapple, means for elevating said hopper, and means for supporting a carrier at the outlet of said chute in position to be engaged by such a grapple.

2. A traveling vehicle for an airplane exchange system, provided with a vertically movable hopper having an open end and a substantially closed end, the top being open except for inturned guide and trap means along the tops of the side walls, the bottom and side walls converging towards the closed end, to provide a chute for guiding an airplane suspended trailing grapple, means for elevating said hopper, and means for supporting a carrier at the outlet of said chute in position to be engaged by such a grapple.

3. A traveling vehicle for an airplane exchange system, provided with a hopper having an open end and a substantially closed end, the bottom and side walls converging towards the closed end, collapsible extensions secured to the ends of the side walls and bottom and adapted to be opened out to enlarge the open end of the hopper, and to provide a chute for guiding an airplane suspended trailing grapple.

4. A traveling vehicle for an airplane exchange system, provided with a hopper having an open end and a substantially closed end, the bottom and side walls converging towards the closed end, a collapsible extension secured to the end of the bottom and adapted to be opened out to enlarge the open end of the hopper, and to provide a chute for guiding an airplane suspended trailing grapple.

5. A traveling vehicle for an airplane exchange system, provided with a hopper having an open end and a substantially closed end, the bottom and side walls converging towards the closed end, collapsible extensions secured to the ends of the side walls and adapted to be opened out to enlarge the open end of the hopper, and to provide a chute for guiding an airplane suspended trailing grapple.

6. A traveling vehicle for an airplane exchange system, provided with a hopper having an open end normally housed within the vehicle and arranged for being projected above the vehicle, means for projecting the hopper above the vehicle to expose the open end, and means at the closed end of the hopper for holding the article to be picked up.

7. A traveling vehicle for an airplane exchange system, provided with a body having guides, a slidable frame mounted for up and down movement in said guides, an open receiving hopper carried by said frame, a guide chute at one end of said hopper, and a compartment for holding articles to be delivered in juxtaposition to said chute.

8. A traveling vehicle for an airplane exchange system, provided with a body having guides, a slidable frame, mounted for up and down movement in said guides, an open receiving hopper carried by said frame, a guide chute at one end of said hopper, a support at the outlet end of the chute for a carrier and a compartment for holding articles to be delivered in juxtaposition to said support.

9. A traveling vehicle for an airplane exchange system, comprising a body having an opening in its top, a hopper in said body beneath said opening, means to cover said opening, and means to project said hopper through said opening.

10. A traveling vehicle for an airplane exchange system, comprising a body having an opening in its top, a hopper having an open end in said body beneath said opening, means to cover said opening, and means to project said hopper through said opening to expose said open end.

11. A traveling vehicle for an airplane exchange system, comprising a body having an opening in its top, a hopper in said body beneath said opening, a compartment beneath said hopper and means to project said hopper through said opening to expose said compartment.

12. A traveling vehicle for an airplane exchange system, comprising a body having an opening in its top, a hopper having an open end in said body beneath said opening, and means to project said hopper through said opeing to expose said open end.

13. A traveling vehicle for an airplane exchange system, comprising a body having an opening in its top, a hopper having an open end in said body beneath said opening, means to project said hopper through said opening to expose said open end, and a compartment adjacent to the closed end of said hopper adapted to be exposed by the projection of said hopper.

14. A traveling vehicle for an airplane article exchange system, having vertically projecting hopper means normally positioned below the vehicle roof line for trapping the airplane suspended article, means for elevating said hopper, and compartment means for holding the load to be picked up substantially as described.

LYTLE S. ADAMS.