March 30, 1937. J. BLANCHARD 2,075,088

MEANS FOR SILENCING GASEOUS CURRENTS

Filed Nov. 30, 1935

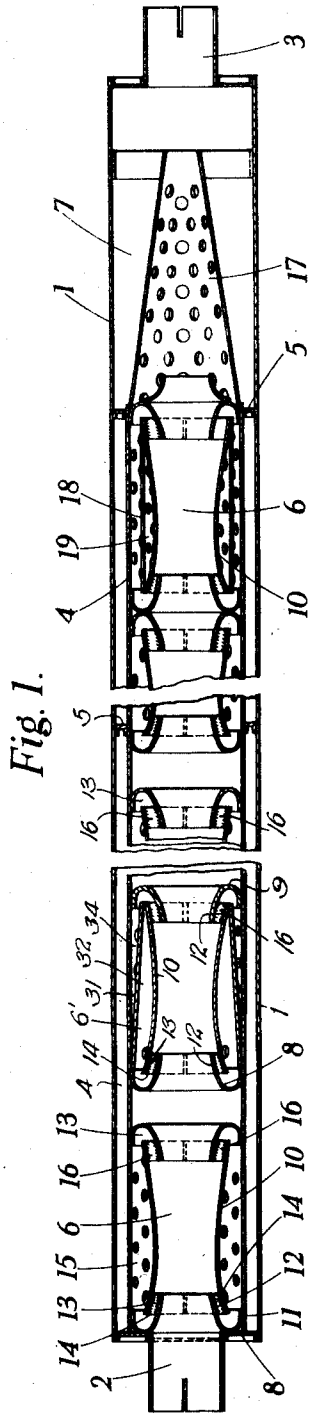

Fig. 1.

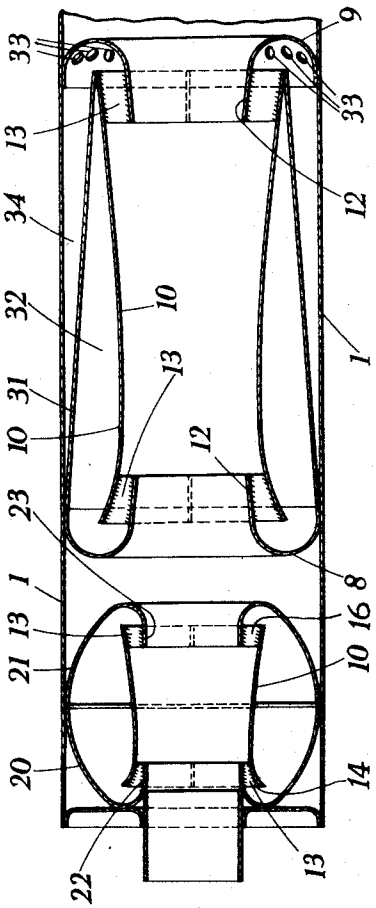

Fig. 2.

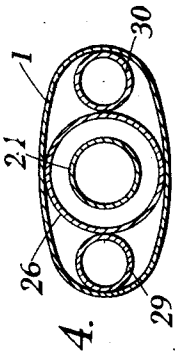

Fig. 4.

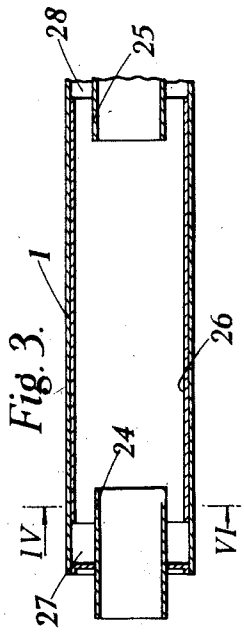

Fig. 3.

INVENTOR
Joseph Blanchard
BY
ATTORNEY

Patented Mar. 30, 1937

2,075,088

UNITED STATES PATENT OFFICE

2,075,088

MEANS FOR SILENCING GASEOUS CURRENTS

Joseph Blanchard, London, England, assignor of one-half to Cecil Gordon Vokes, London, England

Application November 30, 1935, Serial No. 52,434
In Great Britain December 18, 1934

11 Claims. (Cl. 181—41)

This invention relates to silencers for pulsating gaseous currents, such as the exhaust of internal combustion engines, the air intake of internal combustion engines or compressors, the exhaust of pneumatic engines and the like.

It is an object of the invention to provide a silencer in which a series of units or elements are employed each comprising a passage into which an inlet pipe projects at one end to form an injector effective upon some or all of the contents of a space situated between the passage and an outer wall and communicating also with the other end of the passage.

It is a further object of the invention to provide a silencer having inner, intermediate and outer paths for gases and in which gases traversing the intermediate path are subject to the injector effect of gases traversing the inner path.

With these and other objects in view, the invention also consists in the new or improved features, combinations and arrangements of parts embodied in the specific embodiments now to be described in detail, the novel aspects of the invention being pointed out in the claims which follow.

In the drawing:

Figure 1 is a longitudinal section through a silencer,

Figure 2 is a similar section through part of a modified form of silencer,

Figure 3 is a similar section through part of a further form of silencer, and

Figure 4 is a section on the line IV—IV of Figure 3.

The cylindrical outer casing 1 of the silencer shown in Figure 1 has inlet and outlet pipes 2 and 3 respectively and has mounted preferably concentrically within it a cylinder 4 of reticulated material supported by perforated annuli 5.

A series of silencer units 6 is arranged within the reticulated cylinder, which, as shown, does not extend the whole length of the silencer but is of such length as to leave at the outlet end a chamber 7 which is not occupied by silencer units or by part of the reticulated cylinder.

Each of the silencer units 6 comprises a pair of end plates 8 and 9 and a tube 10 of Venturi section. The end plates 8 and 9 comprise each an outer annular portion 11 and a central inwardly dished and apertured portion 12 of greater length joined by an annular channel of substantially segmental cross section.

The end plates 8 and 9 of each unit are secured at the opposite ends of the Venturi tube 10 of that unit by means of radial tongues 13 welded to the tube and the portions 12 of the end plates respectively. The apertured portion 11 of the plate 8 forms an inlet passage projecting into the passage formed by the Venturi tube and an opening 14 surrounding this inlet passage is formed between the portion 12 and the inner wall of the Venturi tube; this passage provides communication between the Venturi passage and the space which surrounds it. A portion 15, of this space is enclosed on the outside by the wall of the reticulated cylinder 4.

A passage 16 is formed between portion 12 of the plate 9 and the inner wall of the Venturi tube at the outlet end thereof, and thus places this end also of the Venturi passage into communication with the space surrounding it.

The inlet passage of the first silencer unit, that on the extreme left in Figure 1, receives gases direct from the inlet pipe 2 of the silencer and leads them into the Venturi passage of that unit. These gases pass to the far end of the Venturi passage and it will be seen from the drawing that a straight-through path is provided for them to the outlet pipe 3 by way of the outlet passage of the first unit and through the succeeding units. Some parts of the gases, however, find their way by the passage 16 to the space 15 the contents of which are subject to the injector action of the gases entering through the inlet passage. This injector action has the effect of returning to the main flow, by way of the opening 14, some of the gases withdrawn to the space 15 by the passage 16.

The action of the succeeding units is similar to that described above, and the gases which pass through the outlet passage of the final, or extreme right hand, unit are led towards the outlet pipe 3 by a conical frustum 17 of reticulated material situated within the chamber 7. Some of the gases withdrawn from the main or central stream to the portions 15 of the space surrounding the Venturi passages of the various units are not returned direct to the main flow by the injector action which caused their withdrawal but pass by way of the reticulations of the cylinder 4, to the annular portion of the space which is situated between the cylinder and the outer casing 1. Some of the gases thus passing may be returned to the main flow by the injector action of succeeding units, but the remainder are drawn towards the outlet pipe 3 by the entraining action of the high velocity gas stream leaving the small end of the cone.

It will be seen from the above description that some of the gases forming the pulsating currents

are withdrawn from the main stream and returned to it at various points, thus tending to break up or reduce the original pulsations. The lengths of the members 10 may vary in accordance with the velocity of the gases entering at the inlet pipe at the normal speed of the engine from which they come, or at the speed at which most efficient silencing is required, and/or in accordance with the volume of gas to be evacuated, and the lengths of the members 10 in succeeding elements or units may be so chosen relatively to each other that a substantially continuous or non-pulsating flow of gases at the exit orifice is obtained.

If desired, provision may be made for causing whirling motion of the gases passing through the silencer. Thus, for instance, suitable deflector plates may be provided for causing whirling motion of the gases within the chamber 7, either within or without the conical frustum 17.

Whirling motion, if provided for in silencers according to the present invention, may be in a single sense or it may be periodically reversed, and gases may be divided into two oppositely directed streams which meet with an effect of collision or turbulence.

If it is desired to limit the space for expansion allowed to the gases, a fairing sleeve may be provided surrounding the Venturi tube, thus reducing the effective volume of the space 15. In Figure 1 a sleeve 18 of reticulated material is shown surrounding the Venturi tube 10 of the extreme right-hand unit, whereby a cushioning space 19 is formed which may serve to absorb pressure peaks in the gases traversing the space 15.

Although it is preferred to employ a Venturi tube as part of the injector system, the injector action may be obtained by the combination of an inlet passage leading into a second passage of any suitable form so as to leave an opening between the inlet passage and the second passage whereby an injector effect is produced upon the space surrounding the latter. The formation of the inlet and outlet passages integrally with the end plates of the units is not, of course, essential, but the curved portions of the end plates illustrated serve as smooth guiding surfaces for the gases leaving and entering the main flow in their passage to and from the space 15.

In some cases the space surrounding the path of the main gas flow may be divided otherwise than by the wall of the reticulated cylinder or by a fairing sleeve as described above, such other manner of division being alternative or additional to those shown in Figure 1. Thus, for example, a member may be provided surrounding the Venturi tube, or its equivalent, but making contact therewith at the outlet end only, the other end being secured to the outer annular portion 11 of the end plate 8 of the unit. A space is thus formed surrounding the main flow of gases and subject to the injector action of those gases since the space is in communication with the opening 14. A vacuum is thus formed surrounding the path of the main gas flow and acts as a deadener of sound. Such a unit is shown in Figure 2, later to be referred to.

The silencer illustrated provides a straight-through passage for the gases, which passage may be followed by the eye from the inlet 2 to the outlet 3. Such a completely straight path may not always be provided, owing, for example, to the slight off-setting of succeeding silencer units, or if several series of units are employed in parallel with common inlet and/or outlet pipes, or where the silencer includes whirling or collison plates.

Figure 2 illustrates a form of silencer comprising two different types of unit in series, that shown on the left in the figure being of simple form from the manufacturing view point, but being generally suitable for use only in cases in which overall diameter is not of great importance.

In this form, the silencer unit shown on the left comprises a pair of members 20 and 21 each formed from a hemispherical stamping and having an internal apertured neck 22 or 23; the necks 22 and 23 form the inlet and outlet passage respectively of the unit. A Venturi tube 10 is secured in position by means of tongues 13, as in the form previously illustrated, with its ends enclosing the ends of the necks.

It will be seen from the drawing that the interior of the unit communicates with the interior of the rest of the silencer only by its inlet and outlet passages so that all gases withdrawn through the passage 16 to the space surrounding the Venturi tube are returned to the main flow by injector action by way of the opening 14.

The unit is shown mounted with its portions 20 and 21 in actual contact with the outer casing 1 of the silencer. If it is preferred, the outer casing may be made of greater relative cross section so that the shell of the unit is spaced therefrom, with or without the intervention of packing material.

In a still simpler form of this kind of unit, the hemi-spherical stampings may be apertured for the reception of inlet and outlet pipes. In such a form it might be found necessary to provide guiding members surrounding these inlet and outlet pipes to provide smooth paths for the by-passed gases similar to those produced in the form illustrated.

The unit shown on the right in the figure comprises a pair of end plates 8 and 9 similar to those shown in Figure 1 and a Venturi tube 10 the ends of which surround the inwardly projecting portions 12 of the end plates to which the tube is secured by tongues 13. A frustoconical sleeve 31 surrounds the tube 10 and is secured at one end to the outlet end of that tube and at the other end to the outer annular portion 11 of the end plate 8.

The space 32 formed between the tube 10 and the sleeve 31 is subject to the injector effect of the gases entering through the inlet of the unit with the result that a vacuum is set up in this space. Such a vacuum situated between the path of the gases through the venturi and the outer casing of the silencer acts as a deadener of sound.

Holes 33 are formed in the outer portion of the end plate 8 to prevent a high pressure zone being set up in the space 34 formed between the sleeve 31 and the outer wall 1 of the silencer.

If it is desirable to produce a silencer having a relatively small dimension in one direction, the construction illustrated in Figures 3 and 4 may be adopted. According to this construction, inlet and outlet pipes 24 and 25 respectively project into a tube 26 of greater diameter mounted within the casing 1, the internal dimension of which in one direction is but slightly greater than the external diameter of the tube 26. The annular spaces formed between the inner surface of the tube 26 and the outer surfaces of the pipes 24 and 25 place the interior of the tube 26 into communication with spaces 27 and 28 respectively formed at the opposite ends of the silencer or unit as the case may be. The spaces 27 and 28

are connected by pipes **29** and **30** shown in Figure 5. The injector action of the gases passing through the inlet pipe **24** tends to cause part of the gases to leave the main flow and enter the space **28** to return to the main flow by way of the pipes **29** and **30** and the space **27**. Appropriate guiding members for the by-passed gases may be provided and packing material may be inserted, if desired, in the spaces between the tubes and casing appearing in Figure 5. Alternatively, the whole of the interior of the casing not occupied by the pipes **24** and **25** and tube **26** may be employed for the return of the gases, the pipes **29** and **30** being omitted, if the freedom of expansion of the gases thus permitted is not undesirable.

The above descriptions of specific forms of silencer are given merely as examples of practical ways of carrying out the invention and various modifications may be made without departing from the invention.

I claim:—

1. A silencer for pulsating gaseous currents including a series of elements each comprising an inlet passage, a second passage which has a substantially imperforate wall and into which said inlet passage projects with an appropriate opening to form an injector, an outer wall forming between itself and the wall of said second passage a space to which the end of said second passage remote from said inlet passage is open and upon some or all of the contents of which the injector formed by said inlet and second passages is effective.

2. A silencer for pulsating gaseous currents including a series of elements each comprising an outer wall, an inlet passage, a second passage receiving the end of said inlet passage to form an injector effective upon the contents of a space formed between said outer wall and the wall of said second passage, a passage connecting said second passage to a space formed between its wall and said outer wall, and open to a space formed within said outer wall to provide a path for gases common to all elements and alternative to those provided by the second passages thereof.

3. A silencer for pulsating gaseous currents comprising intercommunicating inner, intermediate and outer paths for gases, and an inlet passage projecting into said inner path to form an injector effective upon gases traversing said intermediate path.

4. A silencer for pulsating gaseous currents comprising a passage, an outer wall enclosing a space between itself and the wall of said passage, a wall dividing said space into two portions open to opposite ends of said passage, and an inlet pipe projecting into said passage with an appropriate opening to form an injector which tends to draw towards the inlet end of the silencer the contents of that portion of said space which is open to the inlet end of said passage.

5. A silencer for pulsating gaseous currents comprising a passage, an outer wall forming a space between itself and the wall of said passage, an inlet pipe projecting into one end of said passage to form an injector tending to return to said passage gases which have passed to said space from the main flow at the other end of said passage and a further injector tending to return said gases to the main flow at a point later than that at which they left it.

6. A silencer for pulsating gaseous currents comprising an inlet passage, a second passage receiving the end of said inlet passage to form an injector, an outer wall forming a space between itself and the wall of said second passage, said space being open to said second passage at both ends thereof and subject to the action of said injector which tends to return to said second passage gases which have passed therefrom, and a passage formed within said outer wall and forming, for gases which have passed from said second passage to said space, a path alternative to that provided by said second passage.

7. A silencer for pulsating gaseous currents comprising a passage, an inlet passage projecting into said first mentioned passage to form an injector, an outer wall forming between itself and the wall of said first mentioned passage a space which is open to said first mentioned passage at both ends thereof and of which the contents are subject to the action of said injector, and a reticulated wall dividing said space into two portions.

8. A silencer for pulsating gaseous currents comprising an outer casing, a tube of Venturi section arranged within said outer casing and an inlet pipe for gases projecting into said Venturi tube to form an injector effective upon the contents of a space situated between the wall of said Venturi tube and the wall of said outer casing.

9. A silencer for pulsating gaseous currents comprising a tube mounted within a casing, an inlet pipe projecting into said tube with an appropriate opening to form an injector effective upon the contents of a space situated between said tube and said casing, and a sleeve surrounding said tube.

10. A silencer as claimed in claim 9 wherein said sleeve is of reticulated material.

11. A unit for use in a silencer comprising a pair of end plates of which each has an inwardly dished and apertured portion, and a tube the ends of which surround with clearance the ends of the inwardly dished and apertured portions of the said end plates.

JOSEPH BLANCHARD.