Jan. 8, 1952 F. E. WALLIN 2,581,502

COIN CHANGER

Filed Aug. 16, 1946 4 Sheets-Sheet 1

Fig. 1.

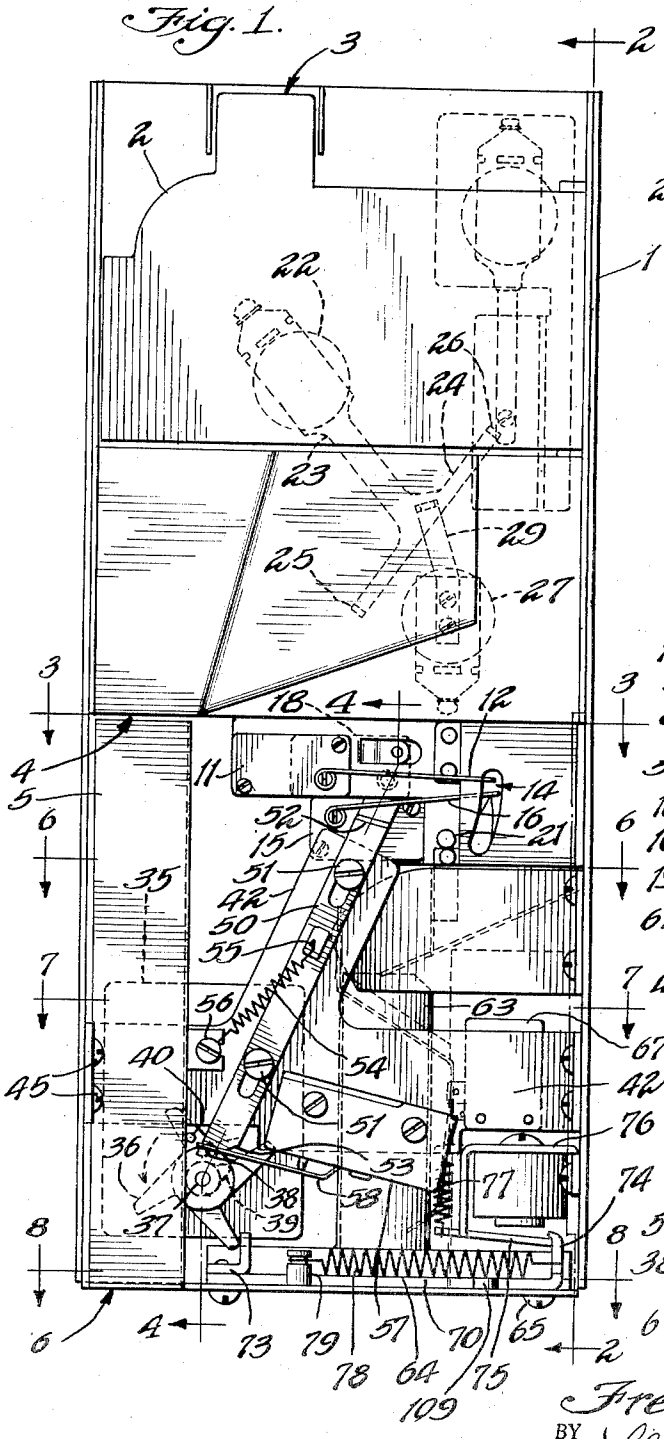

Fig. 2.

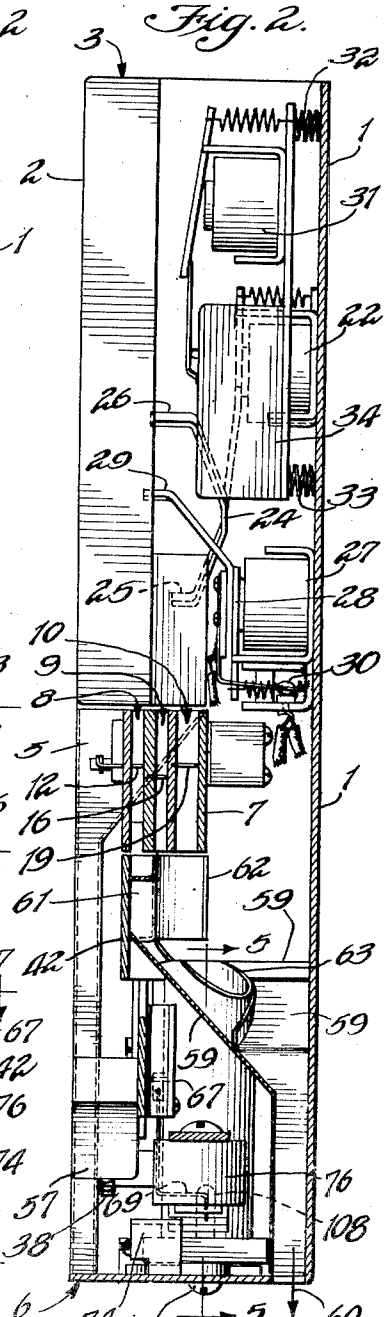

INVENTOR.
Fred E. Wallin
BY
Lloyd J. Andres

Jan. 8, 1952 F. E. WALLIN 2,581,502

COIN CHANGER

Filed Aug. 16, 1946 4 Sheets-Sheet 2

Fig. 3.

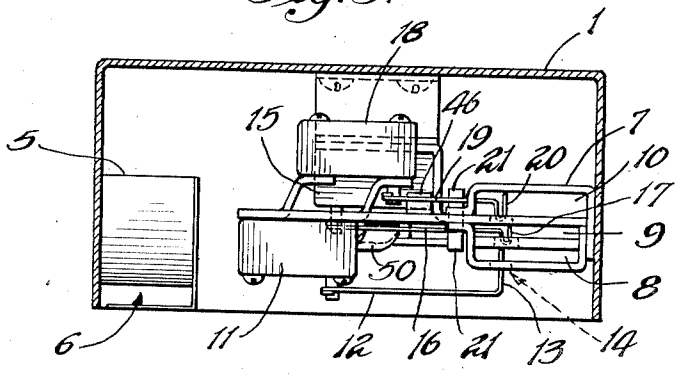

Fig. 4.

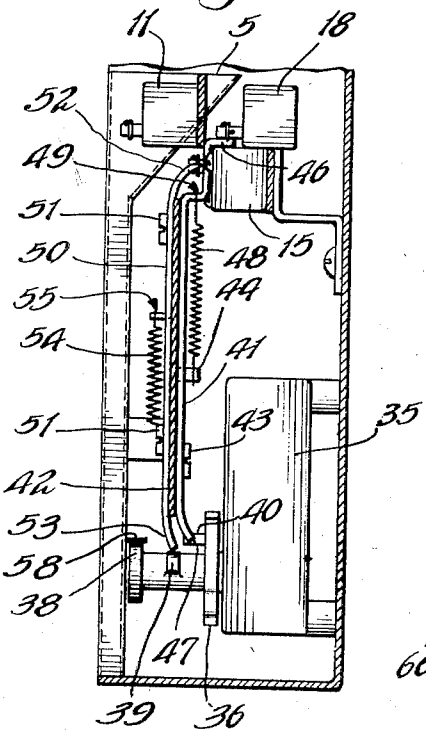

Fig. 5.

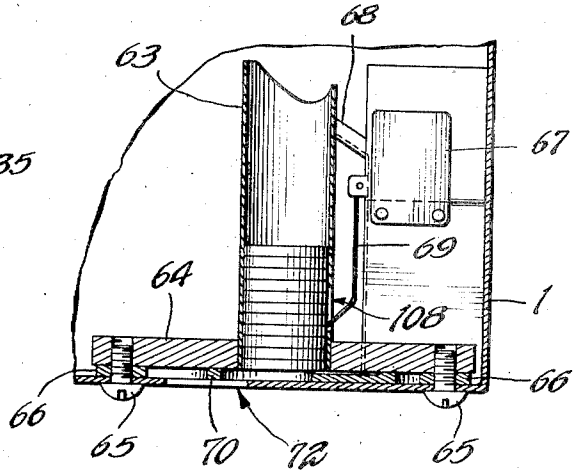

INVENTOR.

Fred E. Wallin

BY

Lloyd J. Andres

Jan. 8, 1952 F. E. WALLIN 2,581,502

COIN CHANGER

Filed Aug. 16, 1946 4 Sheets-Sheet 3

Fig. 6.

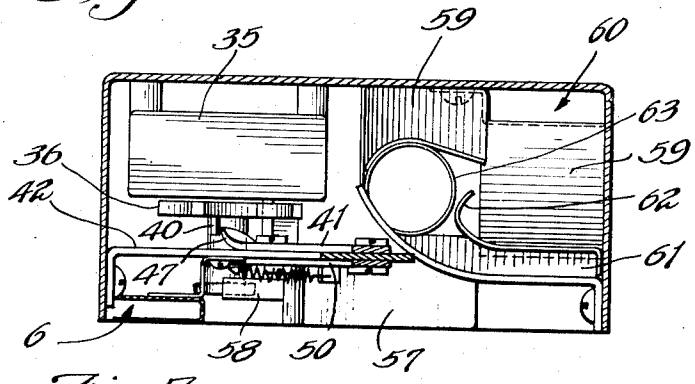

Fig. 7.

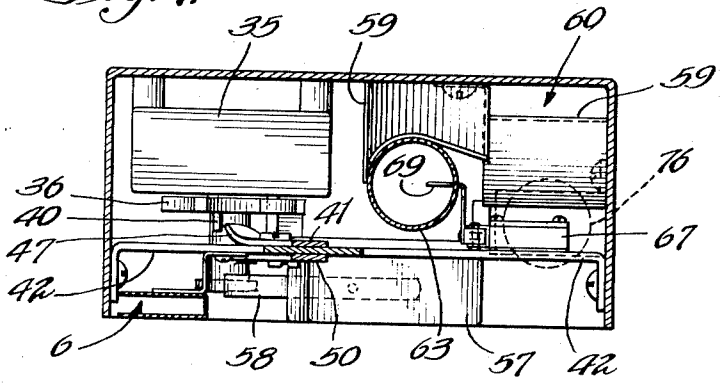

Fig. 8

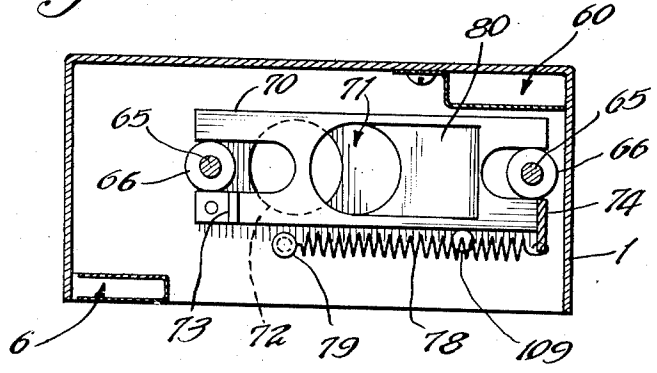

INVENTOR.
Fred E. Wallin
BY
Lloyd J. Andres

Jan. 8, 1952 F. E. WALLIN 2,581,502

COIN CHANGER

Filed Aug. 16, 1946 4 Sheets-Sheet 4

Fig. 10.

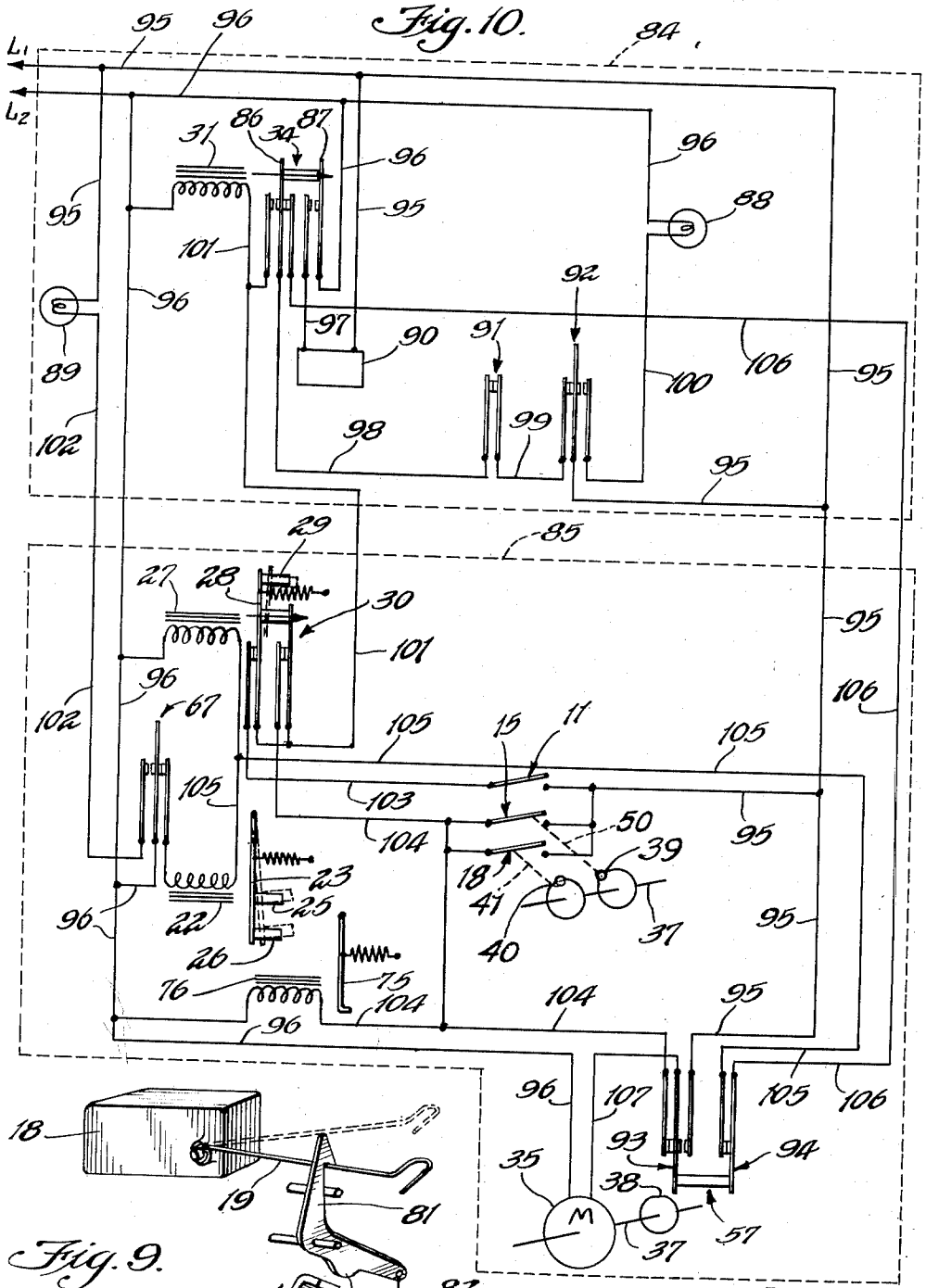

Fig. 9.

INVENTOR.
Fred E. Wallin
BY
Lloyd J. Anderson

Patented Jan. 8, 1952

2,581,502

UNITED STATES PATENT OFFICE

2,581,502

COIN CHANGER

Fred E. Wallin, St. Louis, Mo., assignor to National Slug Rejectors, Inc., St. Louis, Mo., a corporation of Missouri

Application August 16, 1946, Serial No. 691,065

6 Claims. (Cl. 194—10)

1

This invention relates in general to coin control apparatus and more particularly to a mechanism for controlling vending and public service devices and the like, whereby a member of the public may deposit coins of different denomination and automatically be credited with a predetermined unit of value to operate the device and receive in change coins of predetermined value, when such deposit is in excess of the said unit of value.

Coin changers previous to this invention were not only excessively complicated, troublesome, and expensive to manufacture, but could be fraudulently operated by many artifices well known in this art.

The novel features embraced in the present invention overcome the above objections by the use of a combination of electric and mechanical elements cooperating with a highly efficient slug rejector in which coins of different denomination are inserted in a single entry, sorted to denomination, and tested for validity before the change making mechanism and its associated vending device is operated.

The principal features and mode of operation of the invention are applicable to a wide variety of different coins and may be used to control various types of vending machines, coin phonographs and the like, which are adaptable to electric initiation. For clarity, the mechanism shown in the drawings and hereinafter described, is adapted to a unit sale of five cents, and its operation is limited to the deposit of United States nickels, dimes and quarters, and it will be apparent that the principles and features employed in this invention are applicable to a large variety of different coins and coins of different denominations, as well as different units of vended value.

A principal object of the invention is the provision of a combination of a multiple coin slug rejector, coin sorter, and electro-mechanical mechanism adapted to operate an electrically initiated vending or service machine whereby said machine will deliver to a user a predetermined unit of sale upon the deposit of a predetermined coin of minimum value, and when a coin of larger denomination is inserted therein, the user will receive a unit sale from the said machine, and the difference between the value of the said unit sale and the value of the coin deposited, in coins of said minimum value.

A further object of the invention is the provision of an electro-mechanical coin changing mechanism responsive to the deposit of a predetermined coin of minimum value, to electrically

2

operate a vending or service machine to deliver a single unit sale of predetermined value, and upon the deposit of a coin of greater value than the said coin of minimum value to operate said machine, to deliver a single unit of value and simultaneously deliver correct change in coins of said minimum value from a reservoir therein, including means for replenishing said reservoir from subsequent deposits of coins of said minimum value.

A further object of the invention provides for a plurality of coin-responsive electric switches for energizing a motor driven coin dispenser, including means for restoring said switches to their normal inoperative positions when a predetermined number of coins of minimum value have been dispensed.

A further object of the invention is the provision of an electrically driven electro-magnetically controlled coin slide for sequentially dispensing a predetermined number of coins of minimum value from a reservoir.

Another object of the invention is the provision of electro-magnetic means in combination with a coin changing mechanism whereby the deposit of a coin of greater value than the coin of minimum unit sale, will be automatically returned when the coin reservoir in said change-making mechanism is empty.

Another object of the invention is the provision of a coin-changing mechanism having a plurality of coin entry passages, each said passage adapted to receive coin of different denomination and a coin dispensing means for successively dispensing coins of minimum value from a reservoir, an additional means for operating said dispensing means, including electro-mechanical means for restoring the coin changer to normal condition when said dispensing mechanism has completed its function.

A further object of the invention is the provision in a coin changer of means for sorting coins of predetermined denomination and automatically operating a dispensing mechanism for value in excess of a predetermined unit sale, means for deposit of accepted coins in a money box, and means for replenishing coins of minimum value in said reservoir, including electric initiating means for a vending or service machine.

These and other objects of the invention appear in one embodiment hereinafter described and shown in the drawings in which:

Fig. 1 is a front elevation of the mechanism with cover removed.

Fig. 2 is a side elevation of the mechanism shown in Fig. 1 taken through section line 2—2 Fig. 1.

Fig. 3 is a top plan view of the mechanism shown in Fig. 1 taken through section line 3—3 Fig. 1.

Fig. 4 is a fragmentary side view of the mechanism shown in Fig. 1 taken through section line 4—4 Fig. 1.

Fig. 5 is a fragmentary view of mechanism shown in Fig. 2 taken generally through section line 5—5 Fig. 2.

Fig. 6 is a plan view of the mechanism taken through section line 6—6 Fig. 1.

Fig. 7 is a plan view of the mechanism taken through section line 7—7 Fig. 1.

Fig. 8 is a plan view taken through section line 8—8 Fig. 1.

Fig. 9 is a fragmentary perspective diagrammatic view of a switch-holding means alternate to the means shown Fig. 1.

Fig. 10 is a schematic wiring diagram in the device shown Fig. 1 including circuit for operating a typical vending machine.

Referring to Figs. 1 and 2, a main frame 1 serves as a housing for the entire device. A combination slug rejector and coin sorter 2 is detachably positioned in the upper part of the frame by well known means not shown. Since this device is well known in the art further description will be omittted other than to state a single entry 3 is provided for the insertion of coins of three denominations, namely nickels, dimes and quarters. A coin rejection passageway 4 in the slug rejector is shown positioned above and adjacent to the entrance of coin return chute 5 secured to frame 1 having an exit 6 which exit is usually connected to a return cup, not shown, in a vending machine. The slug rejector 2 is provided with three separate and adjacent exits for the passage of acceptable coins. These exits are positioned directly above a combination chute and bracket assembly 7 shown in Figs. 2 and 3, which assembly is secured to frame 1 shown Fig. 3. This assembly forms three separate passages, 8, 9 and 10, for conducting gravity propelled nickels, dimes and quarters respectively.

A spring returned normally open single pole switch 11 is secured to the bracket assembly 7, and provided with an operating arm 12 and a projection 13 extending into passageway 8 through aperture 14. When at rest the switch arm 12 is positioned as shown in Fig. 1. A switch 15 also secured to bracket 7 is the same as switch 11 except that its operating arm 16 is provided with a projection 17 extending into passageway 9. A switch 18 secured to bracket 7 is also the same as 11 except that its arm 19 has a projection 20 extending into the passageway 10. Switch arms 12, 16 and 19 are made of ferrous metal and are normally urged in their upward positions as shown in Figs. 1 and 2 by springs within the switches, not shown.

Permanent magnet 21, preferably made of "Alnico" alloy is secured to bracket 7 beneath the switch arms 16 and 19 only as shown Figs. 1 and 3.

It is apparent that a five cent coin descending in passageway 8 will impinge upon projection 13 of switch arm 12 and momentarily close the switch 11 as the coin continues its downward movement in the passageway.

It is also apparent that when a dime and a quarter are deposited in passageways 9 and 10 respectively, they will encounter projections 17 and 20 and displace the arms 16 and 19 in a downward direction, to close switches 15 and 18, which switches will remain closed by virtue of the magnet 21 attracting and holding their arms 16 and 19 in their downward displaced positions. As in the case of the nickel, the coins will continue their downward travel which movement will be hereinafter described.

Referring to Figs. 1 and 2, an electro-magnetic rejection device 22, is secured to the frame 1 and provided with a spring returned armature 23 having a yoke 24 at its end, which yoke carries two projections 25 and 26 arranged for movement in and out of apertures in the slug rejector 2. It is well known that the insertion of projections at strategic positions in gravity type slug rejectors will reject coins inserted therein. In this case when the device 22 is electrically energized the slug rejector and sorter 2 operates in a normal manner, and when the device is de-energized, the projections 25 and 26 will project into passageways, not shown, and reject dimes and quarters deposited in entrance 3, into passageway 4, and thence to exit 6.

Relay 27 secured to frame 1 has a spring returned armature 28 to which is fixed a projection member 29, the end of which is adapted to move in and out of the five cent passage in the rejector. When the relay is electrically energized, the rejector will operate in normal manner and accept five cent coins, and when the relay is de-energized a nickel deposited in the entrance 3 will be ejected into the rejection passageway 4 and thence to exit 6. Relay 27 also operates a double pole single throw switch 30 which will be hereinafter described. Vending relay 31 is resiliently secured to frame 1 by springs 32 and 33 and includes a dual snap switch 34. This relay may be either part of the vending machine or part of the change maker as shown, but in either case the resilient mounting is provided to prevent fraudulent operation by shock.

An electric motor 35, having a built-in speed reducer shown in Figs. 1, 2, 6, 7, provides the rotation for operating the entire device.

A four tooth cam or star wheel 36 Figs. 1 and 4, secured to the motor drive shaft 37, is driven by the motor in the direction shown by dotted arrow. Two cams, 38 and 39, are integral with the motor shaft and driven thereby. A restoring pin abutment 40 secured to the star wheel 36 is positioned in a predetermined spaced relation with the cams 38 and 39, cam 38 having a single depression in its outer surface.

A bar 41 for restoring switch 18 is slidably secured to bracket 42 by screw 43 and pin 44 in bracket 42. The bracket in turn is secured to frame 1 by screws 45 as shown Fig. 1.

The upper end 46 of bar 41 is formed to lie in the path of the arm 19 of switch 18. The lower end 47 of the bar is shaped to make a camming contact with pin abutment 40. The bar is normally urged into its lowermost position, shown in Fig. 4, by spring 48, one end of which is secured to the bar at 49 and its opposite end secured to pin 44. A second restoring bar 50 is slidably secured to bracket 42 by screws 51. The upper end 52 of bar 50 lies in the path of arm 16 of switch 15. The lower end 53 of bar 50 is a camming surface shaped to engage cam 39. Bar 50 is urged in its lowermost position by spring 54 secured to the bar at 55, and at its opposite end by screw 56 in bracket 42.

Switch 57 secured to bracket 42 is of the snap variety and has its operating lever 58 positioned on cam 38, and is provided to control, among other things, the motor 35 for one revolution of

its shaft 37 per cycle. It is apparent that when switch arms 16 and 19 shown in Fig. 3 are held in their downward positions by magnet 21, that one revolution of the motor drive shaft 37 will cause pin abutment 40 Fig. 4 to move the bar 41 upward and restore switch arm 19 to its initial position. Likewise, bar 50 will be moved by cam 39 to restore switch arm 16 of switch 15 to its normal position and during this cycle cam 38 will move lever 58 to operate switch 57. Since the switches 15, 18 and 57 must function in a predetermined time relation, the positioning of cams 38 and 39 and pin abutment 40 bears an important relation with the length of bars 41 and 50. It is to be noted that a single cam and a single bar could be employed as an equivalent to the bars 41 and 50 if provided with properly spaced projections to engage switch arms 16 and 19 at different times during its motion.

Acceptance guide chute assembly 59, Fig. 2, secured to frame 1 and bracket 42, is provided for conducting dimes and quarters descending in passageways 9 and 10 directly to acceptance exit 60. Nickels descending in passageway 8 will be intercepted by runway 61 better shown in Fig. 6, secured to chute assembly 59 and guided by guide plate 62 into the nickel reservoir or magazine 63, better shown in Fig. 5. The magazine 63 is integral with a bridge plate 64, which plate is held in spaced relation with the bottom surface of frame 1 by screws 65 and spacers 66.

Referring to Fig. 2, it is apparent that when magazine 63 is filled with nickels subsequent nickels descending through passageway 8 will overflow into the chute assembly 59 by virtue of the angular upper edge of the magazine 63.

Referring to Figs. 2, 5 and 7, a single pole double throw snap switch 67 is mounted to a bracket 68, which bracket is secured to frame 1 and magazine 63. The operating lever 69 of this switch is formed to project through an aperture 108 in the lower portion of magazine 63. It is obvious that the switch will remain in position shown in Fig. 5 when at least five coins are in the magazine. When less than five coins are in the magazine, the switch lever 69 will move inwardly into the magazine, by virture of a spring within the switch 67, not shown, as illustrated in Fig. 7. It is also apparent that when more than five coins accumulate in the coin magazine by gravity the switch will operate and assume the position shown Fig. 5.

Referring to Figs. 1, 5 and 8, a coin ejector slide 70 is slidably secured in the space between bridge plate 64 and the base of frame 1. This slide is positioned by spacers 66. A circular hole 71 in the slide 70, having a diameter slightly larger than a five cent coin, is normally positioned directly beneath the coin magazine 63. Adjacent to the normal position of the hole 71 is a circular aperture 72, Figs. 5 and 8, in frame 1 through which coins are ejected to a return cup, not shown.

A striker bracket 73 is secured to one end of the slide 70 for successively engaging with each tooth of the star wheel 36 shown in Fig. 1. A latch abutment 74 is integral with the opposite end of the slide 70 and arranged for locking engagement with armature 75 of electro-magnet 76 which armature is normally held in position shown in Fig. 1 by spring 77. Spring 78 is secured to latch abtument 74 at one end and has its opposite end secured to pin 79 in frame 1, which normally urges slide 70 toward its discharge position. Stop pin 109, integral with the

frame 1, is positioned in the path of abutment 74 to stop the slide 70 with its hole 71 in accurate register with aperture 72 in frame 1. A depression 80 in the upper surface of slide 70 is provided to assure proper edge contact with one coin only when the slide is operated. It is now apparent that when coins are stacked in the magazine 63 and the slide 70 is released by armature 75, the slide under the influence of spring 78 will move the lowermost coin in the magazine 63 into the discharge aperture 72 where the coin will fall by gravity to return cup, not shown. Upon the return of the slide to normal position, the next lowermost coin in the stack will descend by gravity into the hole 71 in slide 70 for subsequent discharge.

Fig. 9 illustrates an alternate mechanical means for holding the operating arms of the dime and quarter switches pending their release by bars 41 and 50 shown in Fig. 4. A bell crank latch 81 pivotally secured in frame 1 having its upper end normally urged into the path of arm 19 by spring 82, will latch and hold the coin displaced arm 19 in position shown until bar 41 reciprocates as shown by arrow to strike abutment 83 on latch 81, which will overcome the force exerted by spring 82 to dislodge the latch from arm 19, permitting the arm 19 to return to its normal position shown by dotted lines in Fig. 4, which means accomplish the same result as obtained with the magnet holding means previously described.

Referring to schematic diagram Fig. 10, the elements in dotted enclosure 84 refer to the electrical components for initiating and operating a typical vending machine. Elements in the dotted enclosure 85 refer to the electrical components in the coin rejector, sorter and the change maker.

The electric elements related to a typical vending machine include an electric vending relay 31 adapted to operate a dual switch 34, which comprises an electrically independent single pole double throw switch 86 and a normally open single pole switch 87. Electric signal lamp 88 is provided to be illuminated when the machine is sold out. Another electric signal lamp 89 is provided to indicate when the nickel magazine 63 is empty and only nickels can operate the machine. Electric device 90 indicates an electric motor, electro magnet or other electrically initiated devices for operating the vending machine. Normally closed single pole switch 91 is adapted to be momentarily opened during the delivery cycle of the vending machine. Single pole double throw switch 92 is operated only when the vending machine is sold out.

Referring to the dotted enclosure 85, relay 27 in the change maker includes projection member 29 previously described and also a double pole single throw switch 30. The electro-magnetic rejection device 22 is shown having an armature 23 carrying dime and quarter reject projections 25 and 26. A single pole double throw switch 67, previously described, is adapted to be responsive to coins in the magazine 63. Electro-magnet 76 acting upon armature 75 is employed to release the coin slide 70. Normally open single pole coin switches 11, 15 and 18, responsive to nickels, dimes and quarters respectively, are shown in their normal open positions with restoring bars 41 and 50 related to switches 15 and 18 only. The motor driven pin abutment 40 and cam 39 acting upon bars 41 and 50 are also shown. Electric motor 35 for driving the mechanical parts of the coin changer is shown operatively related

to dual snap switch 57 which comprises a single pole double throw switch 93 and a normally closed single pole switch 94 related to its operating cam 38.

Conductor 95 is connected to one side of a source of power L1 and is connected to one terminal of lamp 89, one terminal of electric device 90 and to the center pole of switch 92, and to one of each terminal of coin switches 11, 15 and 18, and to the normally open pole of switch 93. Conductor 96 is connected to the remaining side of the source of power L2 and connected with one pole of switch 87 and one terminal of lamp 88, one terminal of relay 31, one terminal of relay 27, center pole of switch 67, one terminal of electro-magnet 76, and one terminal of motor 35.

Conductor 97 connects the remaining pole of switch 87 with the remaining terminal of electric device 90. The center pole of switch 86 is connected to one pole of switch 91 by conductor 98. The remaining pole of switch 91 is connected to the normally closed pole of switch 92 by conductor 99. The normally open pole of switch 92 is connected to the remaining terminal of lamp 88 by conductor 100. Conductor 101 connects the remaining terminal of relay 31 with the normally open pole of switch 86 and the two operative poles of switch 30. Conductor 102 connects the remaining terminal of lamp 89 to the normally open pole of switch 67. One normally closed pole of switch 30 is connected to the remaining pole of coin switch 11 by conductor 103. Conductor 104 connects the remaining normally closed pole of switch 30 with the remaining poles of coin switches 15 and 18 and the remaining terminal of electro-magnet 76 and the normally closed pole of switch 93. Conductor 105 runs to the remaining terminal of electro-magnetic rejection device 22 and the remaining terminal of relay 27 and terminates at the normally closed pole of switch 94. The normally closed pole of switch 86 is connected to the remaining side of switch 94 by conductor 106. Conductor 107 connects the remaining terminal of motor 35 with center pole of switch 93.

In operation, and considering that the embodiment of the invention shown and described refers to a mechanism for making a unit sale of five cents value, and is limited to the insertion of nickels, dimes and quarters, and assuming that the mechanism is in its initial position as shown in Figs. 1, 2 and 10, and power lines L1 and L2 are energized, then all components will be in positions shown in the drawings with the rejection device 22 energized and its projections 25 and 26 withdrawn, likewise the relay 27 will be energized with its projection 29 withdrawn. Then the deposit of a five cent coin for a single sale in the entry 3, Fig. 1, will result in the coin being tested for validity and transferred by gravity into the entrance passage 8, whereupon it will strike operating arm 12 to momentarily close switch 11, and then be guided by runway 61, Fig. 6, into coin magazine 63.

In the event magazine 63 is filled, the coin will slide over the tapered entrance of magazine 63 by gravity into acceptance guide chute 59 through acceptance exit 60.

Referring to Fig. 10, the momentary closing of switch 11 will momentarily complete a circuit from power line L1 through conductors 95 and 103, through the closed switch 30, through conductor 101, relay 31, through conductor 96 to power line L2. Thus the relay switch 34 will operate and complete a holding circuit for relay 31, through conductor 101, through the then closed portion of the switch 86, through conductor 98, through switch 91, through conductor 99, through switch 92, through conductor 95 to L1. Simultaneously, a circuit is completed from the power line L1 through conductor 95, through the electric device 90, switch 87, conductor 96, to power line L2. The electric device 90 will then operate the vending machine through one cycle until switch 91 is momentarily operated at the end of the vending cycle thus breaking the holding circuit through relay 31 and permitting its switch 34 to return to its normal position as shown, which will complete the vending cycle and the delivery of the one unit of value. It is to be noted that when switch 11 is momentarily closed by a five cent coin, a circuit of extremely short duration is completed through electro-magnet 76 and the motor 35 through conductor 103, switch 30, conductor 104, the closed portion of switch 93 and conductor 107. However, the closing of this circuit is of insufficient duration to start the shaft 37 because of the relatively high ratio reduction connecting the motor 35. Furthermore, the armature 75 will not disengage from the coin slide 70 until the slide is moved by action of the motor. Hence the deposit of a nickel will operate the vending machine to deliver one unit of value but will not operate the coin slide 70. Even though the motor should be moved sufficiently far to close the holding switch 93, the shaft 37 would make one revolution without operating the coin slide for the reason that after the passage of a five cent coin, the electro-magnet 76 remains de-energized, preventing the arm 75 from disengaging from the abutment 74, as shown Fig. 1.

When the switch 34 is operated, it is apparent that the normally closed pole of the switch 86 will open, thus opening a circuit through relay 27 and electro-magnetic rejection device 22, the action of which will be later described.

In the event the vending machine is empty, switch 92 will be held in displaced position which will permanently break the circuit through relay 31 and prevent its operation, and concurrently will complete a circuit from power line L2 through conductor 96, through signal lamp 88, through the then closed portion of switch 92, through conductor 95, to power line L1. The lamp 88 will then be illuminated and by appropriate nomenclature lighted thereby, indicate that the machine is inoperative.

When a dime is deposited in the entry 3 for a five cent unit sale, the dime will be tested for validity in rejector 2 and transferred by gravity into passage 9, Figs. 2 and 3, and thereby displace arm 16 of switch 15 whereby the arm will be held in displaced position by magnet 21. The coin will continue its descent into acceptance guide chute 59, and thence through acceptance exit 60. Referring to Fig. 10, the closing of switch 15 will complete a circuit from power line L1 through conductor 95, through conductor 104, to energize electro-magnet 76 through conductor 96 to power line L2. Since conductor 104 also runs through the closed portion of switch 93, motor 35 will be energized through conductor 107 and conductor 96 which connects to power line L2. When the motor is energized, shaft 37 will begin its rotation in the direction shown by arrow, Fig. 1, which rotation will drive cam 38 to shift the switch 57 from position shown Fig. 10 to its opposite position which will complete a holding circuit for the motor 35 through conductor 107 through switch 93 through conductor

95 to power line L1. This movement of switch 57 will also open switch 94 and break the circuit through relay 27 and electro-magnetic rejection device 22. When the latter devices are thus de-energized, any coins deposited in the entry 3 will automatically be returned through rejection passageway 4 into chute 5 through exit 6 to a return cup, not shown. This operation is necessary in order that the vending machine and the change maker will have time to complete their respective functions before a second operation is obtainable. It is to be noted that the switch 94 is connected in series with the normally closed poles of switch 86, in order to provide positive means for de-energizing of the relay 27 and the electro-magnetic device 22, regardless of whether the length of time for the operation of the vending device is greater or less than that of the changemaker.

The closure of the coin switch 15 which is held in closed position by magnet 21 first completes a circuit through conductor 104 through the closed portion of switch 30 through relay 31 which will operate the switch 34 and cause the vending machine to complete a cycle in the same manner as was described for the nickel. Immediately following this operation the motor 35 will open switch 95 and de-energize the relay 27 and a portion of the switch 86. Simultaneously a tooth of the star wheel 36, shown Fig. 1, will contact striker bracket 73 of slide 70 and move it against the restraining action of spring 78 sufficiently far for the now energized electro-magnet 76 to disengage its armature 75 from its normally latched engagement with abutment 74. It is to be noted that the electro-magnet 76 has remained energized by virtue of a circuit therethrough established by the closure of switch 15. Whereupon the star wheel tooth in continuing its motion will disengage from striker bracket 73, which will permit the slide to laterally move under the influence of spring 78 to slide the lowermost nickel in the magazine 63 into discharge aperture 72, Fig. 8, which coin is conducted by gravity into a return cup, not shown. Upon the discharge of this nickel, which constitutes the change from the dime deposited, the cam 39, Figs. 1 and 4, driven by motor 35, will contact the lower end 53 of bar 50 to move it upwardly whereby its upper end 52 will engage switch operating arm 16 and break its magnetic contact with magnet 21, permitting the switch to return to its normal position shown Fig. 1.

Referring to Fig. 10, the opening of switch 15 will break the circuit established through electro-magnet 76 and permit the armature 75 to move to its downward position as shown Fig. 1, whereupon the slide returning from its nickel discharge position by virtue of movement imparted by the next tooth of the star wheel 36, will return the slide to its latched position as shown Fig. 1.

The motor will continue its rotation until its shaft 37 carrying cam 38 and the star wheel 36, has made one complete revolution whereupon the switch 57, having its operating blade in contact with cam 38, will open, thus restoring the entire apparatus to the position as shown in Figs. 1 and 10.

A quarter deposited in the single entry 3 for a five cent unit sale will be tested for validity and will be transferred in rejector 2 by gravity into passage 10 where it will move arm 19 of switch 18 as shown Fig. 3, in its downward position where it will be held thereby by magnet 21. The quarter will continue its descent through acceptance exit 60 by the guiding action of chute assembly 59.

Referring to Fig. 10, the closure of switch 18 will complete a circuit through electro-magnet 76 and the closed portion of switch 93 to energize motor 35, whereupon the cam 38 will move switch 57 to its opposite position, holding the motor 35 and electro-magnet 76 energized through the now closed, normally open portion of switch 93, and breaking the circuit through relay 27 and electro-magnetic rejection device 22, through the action of the open circuit position of switch 94. Thus the projection member 29 and projections 25 and 26 are moved into rejector 2 to reject any coins deposited in the entry 3, the same as during the dime operation previously described. The closure of switch 18 will prior to the operation of motor 35 complete a circuit through switch 30 through relay 31 and thereby operate the vending machine in the manner previously described for one unit of value. The star wheel 36 will again rotate one revolution and since the discharge of four nickels from the magazine is required, switch 18 will remain closed until pin abutment 40 on the star wheel contacts the lower end 47 of bar 41 Fig. 4, whereby the upper end 46 will strike arm 19 of switch 18 and dislodge the arm from its contact with magnet 21, permitting the arm to return to its normal upward position, thus opening switch 18. Since electro-magnet 76 was energized during the complete rotation of the star wheel 36, its four teeth successively released and restored the slide 70 in the same manner as previously described, permitting the discharge of four nickels from the magazine 63, providing the proper change for five cent unit sale and returning all elements of the device to their normal positions. When the star wheel 36 returns to its neutral or normal position, after the fourth nickel is discharged, it moves slide 70 slightly to the right of the position shown in Figure 1 sufficiently to permit armature 75 to drop into locking engagement and thereby freely engage latch abutment 74 whereupon spring 78 returns the slide 70 to the position shown in Figure 1.

In the event that an excessive amount of coins of large denomination are used in the device, it is possible that the coin magazine 63 may become depleted of nickels and to prevent improper operation under this condition, switch 67 associated with magazine 63, will be displaced to complete a circuit through signal lamp 89 from line L1, conductor 95, conductor 102, conductor 96, to line L2. The lighting of the lamp 89 is intended to illuminate certain nomenclature not shown, indicating the use of nickels only. Simultaneously, the circuit through electro-magnetic rejection device 22 is broken, permitting projections 25 and 26 to enter the rejector 2, which will automatically reject dimes and quarters only, should they be deposited.

Referring to Fig. 9, it is now apparent that the bell crank latch can serve the same useful purpose as the permanent magnet 21 for holding the dime and quarter switches in their closed positions until restored by the action of bars 41 and 50.

Having described my invention, I claim:

1. The combination of an electric vending machine adapted to operate one cycle and deliver one unit of value when energized and a coin operated mechanism and a change maker responsive to each of a predetermined plurality of coins for one cycle of operation to operate said vending

machine one said cycle and deliver therefrom change coins of predetermined denomination including means forming a frame, a change coin passageway in said frame for normally conducting gravity propelled change coins of said predetermined denomination, means in said frame forming a plurality of other coin passageways, each of said other passageways adapted to conduct in an independent path gravity propelled coins of different other predetermined denominations respectively, a momentary electric switch positioned in said frame responsive to each coin of said first mentioned predetermined denomination descending in its corresponding passageway, a plurality of other coin switches positioned in said frame, each of said switches corresponding with and responsive to coins of each of said other predetermined denominations respectively, a plurality of holding means in said frame adapted to temporarily and independently hold each of said other coin switches in displaced position when operated, electrically driven coin dispenser means for receiving and temporarily storing said change coins descending through said change coin passageway and for sequentially discharging said change coins when energized, cam means operatively positioned in said frame with respect to and driven by said dispenser means, restoring means positioned in said frame for movement by said cam means for restoring each of said other coin switches when held in displaced position by said corresponding holding means, relay means for energizing and deenergizing said vending machine, cam switch means driven and controlled by said cam means, a source of electric energy, electric circuit means connecting all said coin switches said dispenser means said relay means said cam switch means and said vending machine and said source of electric energy whereby the deposit of a coin of change coin denomination in its said passageway will momentarily operate said change coin switch and energize through a portion of said circuit means said relay means to operate said vending machine one cycle and deliver one unit of value and gravitate said change coin into said dispenser means and whereby the deposit of a coin of any of said other denominations in its corresponding said passageway will operate its said corresponding other coin switch which switch will be temporarily held in its displaced position by its said holding means and concurrently through another portion of said circuit means energize said relay means to operate said vending machine one cycle to deliver one unit of value and through another portion of said circuit means and through said cam switch means energize said dispenser means to discharge a predetermined number of coins of said change coin denomination and whereby the initial movement of said cam switch means will maintain a circuit for one cycle of operation of said dispenser means and whereby the predetermined movement of said cam means will operate said restoring means and restore said displaced other coin switch.

2. The combination of an electric vending machine adapted to operate one cycle and deliver one unit of value when energized and a coin operated mechanism and a change maker responsive to each of a predetermined plurality of coins for one cycle of operation to operate said vending machine one said cycle and deliver therefrom change coins of predetermined denomination including means forming a frame, a change coin passageway in said frame for normally conducting gravity propelled change coins of predetermined denomination into said change maker, means in said frame forming a plurality of other coin passageways, each of said other passageways adapted to conduct in an independent path gravity propelled coins of different other predetermined denominations respectively, a momentary electric switch positioned in said frame responsive to each coin of each said denomination descending in its corresponding passageway, a plurality of other coin switches positioned in said frame, each of said switches corresponding with and responsive to coins of each of said other predetermined denominations respectively, a plurality of holding means in said frame adapted to temporarily and independently hold each of said other coin switches in displaced position when operated, a reject passageway in said frame connecting each of said passageways above said coin switches forming a reject junction with each said passageway, an electro-magnetic means in said frame having an armature projection extending into each said reject junction when deenergized for rejecting all coins descending in all said passageways and permitting all coins to descend in said passageways to said coin switches when said electromagnetic means is energized, empty switch means in said vending machine responsive to the last unit of value dispensed thereby, electrically driven coin dispenser means for receiving and temporarily storing said change coins descending through said change coin passageway and for sequentially discharging said change coins when energized, cam means operatively positioned in said frame with respect to and driven by said dispenser means, restoring means positioned in said frame for movement by said cam means for restoring each of said other coin switches when held in displaced position by said corresponding holding means, relay means for energizing and deenergizing said vending machine, cam switch means driven and controlled by said cam means, a source of electric energy, electric circuit means connecting all said coin switches said dispenser means said electromagnetic means said relay means said cam switch means said vending machine said empty switch means and said source of electric energy whereby the deposit of a coin of change coin denomination in its said passageway will momentarily operate said change coin switch and energize through a portion of said circuit means said relay means to operate said vending machine one cycle and deliver one unit of value and gravitate said change coin into said dispenser means and whereby the deposit of a coin of any of said other denominations in its corresponding said passageway will operate its said corresponding other coin switch which switch will be temporarily held in its displaced position by its said holding means and concurrently through another portion of said circuit means energize said relay means to operate said vending machine one cycle to deliver one unit of value and through another portion of said circuit means and through said cam switch means energize said dispenser means to discharge a predetermined number of coins of said change coin denomination and whereby the initial movement of said cam switch means will maintain a circuit for one cycle of operation of said dispenser means and whereby the predetermined movement of said cam means will operate said restoring means and restore said displaced other coin switch and whereby the absence of units of value in said vending machine will operate said empty switch and through another portion of said circuit

means deenergize said electromagnetic means to reject any said coins descending in any said passageways.

3. The combination of an electric vending machine adapted to operate one cycle and deliver one unit of value when energized and a coin operated mechanism and a change maker responsive to each of a predetermined plurality of coins for one cycle of operation to operate said vending machine one said cycle and deliver therefrom change coins of predetermined denomination including means forming a frame, a change coin passageway in said frame for normally conducting gravity propelled change coins of predetermined denomination into said change maker, means in said frame forming a plurality of other coin passageways, each of said other passageways adapted to conduct in an independent path gravity propelled coins of different other predetermined denominations respectively, a momentary electric switch positioned in said frame responsive to each coin of each said denomination descending in its corresponding passageway, a plurality of other coin switches positioned in said frame, each of said switches corresponding with and responsive to coins of each of said other predetermined denominations respectively, a plurality of holding means in said frame adapted to temporarily and independently hold each of said other coin switches in displaced position when operated, a reject passageway in said frame connecting each of said other passageways above said coin switches forming a reject junction with each said passageway, an electromagnetic means in said frame having an armature projection extending into each said reject junction when deenergized for rejecting all coins descending in all said passageways and permitting all coins to descend in said passageways to said coin switches when said electromagnetic means is energized, electrically driven coin dispenser means for receiving and temporarily storing said change coins descending through said change coin passageway and for sequentially discharging said change coins when energized, including safety switch means responsive to the discharge of the last said change coin in said dispenser, cam means operatively positioned in said frame with respect to and driven by said dispenser means, restoring means positioned in said frame for movement by said cam means for restoring each of said other coin switches when held in displaced position by said corresponding holding means, relay means for energizing and deenergizing said vending machine, cam switch means driven and controlled by said cam means, a source of electric energy, electric circuit means connecting all said coin switches said dispenser means said electromagnetic means said relay means said cam switch means said vending machine said safety switch means and said source of electric energy whereby the deposit of a coin of change coin denomination in its said passageway will momentarily operate said change coin switch and energize through a portion of said circuit means said relay means to operate said vending machine one cycle and deliver one unit of value and gravitate said change coin into said dispenser means and whereby the deposit of a coin of any of said other denominations in its corresponding said passageway will operate its said corresponding other coin switch which switch will be temporarily held in its displaced position by its said holding means and concurrently through another portion of said circuit means energize said relay means to operate said vending machine one cycle to deliver one unit of value and through another portion of said circuit means and through said cam switch means energize said dispenser means to discharge a predetermined number of coins of said change coin denomination and whereby the initial movement of said cam switch means will maintain a circuit for one cycle of operation of said dispenser means and whereby the predetermined movement of said cam means will operate said restoring means and restore said displaced other coin switch and whereby the absence of said change coins in said dispenser will operate said safety switch and through another portion of said circuit means deenergize said electromagnetic means to reject said coins of other predetermined denomination descending in their corresponding passageways.

4. In a coin dispenser of the character described means forming a frame, a coin discharge slide positioned for movement in said frame from a loading position to an unlocking position and to a discharge position, a coin magazine secured in said frame above said slide for retaining a plurality of like coins in a coaxial stack for sequential discharge, said slide having a pocket for receiving by gravity and temporarily holding therein the lowermost coin of said stack when said slide is in said loading position, discharge spring means for urging said slide toward said discharge position, an electromagnet positioned in said frame in proximity with said slide, a movable armature attractable to said electromagnet when energized, spring means normally urging said armature in retracted position, a latch abutment integral with said slide normally in locking engagement with said armature against the restraining action of said discharge spring means during movement of said slide from said loading position to said unlocking position, cam means in said frame, means for operating said cam means, said cam means being provided with a plurality of engaging means and being positioned with respect to said slide for engaging said slide and, when said cam means is operated, for moving said slide from its discharge position to its unlocking position whereby a coin in said pocket will be discharged, when said electromagnet is energized, only when said cam means first moves said slide in one direction to its unlocking position to permit disengagement of said armature from said abutment and permit said discharge spring means to move said slide in the opposite direction to its discharge position to discharge the coin in said pocket, and means including one of said engaging means for moving said slide from its discharge position to its unlocking position to permit the reengagement of said armature with said abutment when said magnet is deenergized.

5. In a coin dispenser, a frame, a coin discharge slide positioned for movement in said frame from a loading position to an unlocking position and to a discharge position, a coin magazine secured in said frame, said slide having a pocket for receiving and temporarily holding therein the lowermost coin of said stack when said slide is in said loading position, discharge spring means for urging said slide toward said discharge position, an electromagnet positioned in said frame in proximity with said slide, a movable armature attractable to said electromagnet when energized, spring means normally urging said armature in retracted position, a latch abutment integral with said slide normally

in locking engagement with said armature against the restraining action of said discharge spring means during movement of said slide from said loading position to said unlocking position, cam means in said frame, means for operating said cam means, said cam means being provided with a plurality of engaging means and being positioned with respect to said slide for engaging said slide and, when said cam means is operated, for moving said slide from its discharge position to its unlocking position whereby a coin in said pocket will be discharged, when said electromagnet is energized, only when said cam means first moves said slide in one direction to its unlocking position to permit disengagement of said armature from said abutment and permit said discharge means to move said slide in the opposite direction to its discharge position to discharge the coin in said pocket, and means including one of said engaging means for moving said slide from its discharge position to its unlocking position to permit the re-engagement of said armature with said abutment when said magnet is deenergized.

6. In a coin dispenser, a frame, a coin discharge slide positioned for movement in said frame from a loading position to an unlocking position and to a discharge position, a coin magazine secured in said frame for retaining a plurality of like coins in a coaxial stack for sequential discharge, said slide having a pocket for receiving and temporarily holding therein the lowermost coin of said stack when said slide is in said loading position, discharge spring means for urging said slide toward said discharge position, an electromagnet positioned in said frame in proximity with said slide, a movable armature attractable to said electromagnet when energized, spring means normally urging said armature in retracted position, a latch abutment integral with said slide normally in locking engagement with said armature against the restraining action of said discharge spring means during movement of said slide from said loading position to said unlocking position, cam means having a plurality of engaging means and means for operating said

cam means, said cam means being arranged to rotate from neutral position with said slide in locking engagement one cycle and back to neutral position, said cam means being positioned with respect to said slide for engaging and moving said slide, upon initial rotation, from its loading position to its unlocking position to permit disengagement of said armature from said abutment, when said electromagnet is energized, and permit said discharge spring means to move said slide in the opposite direction to its discharge position to discharge the coin in said pocket, and means, during the return of said cam means to neutral position, including one of said engaging means for moving said slide and latching abutment slightly beyond locking position so as to permit the re-engagement of said armature with said abutment when said magnet is deenergized.

FRED E. WALLIN.

REFERENCES CITED

The following references are of record in the file of this patent:

UNITED STATES PATENTS

Number	Name	Date
952,809	Jackson	Mar. 22, 1910
1,795,056	Tomarin	Mar. 3, 1931
1,942,443	Neumann	Jan. 9, 1934
1,946,985	Parker et al.	Feb. 13, 1934
2,022,110	Erbe	Nov. 26, 1935
2,097,610	Wilsey	Nov. 2, 1937
2,112,511	Williams	Mar. 29, 1938
2,213,651	Hall	Sept. 3, 1940
2,250,051	Patzer	July 22, 1941
2,262,322	Harris	Nov. 11, 1941
2,442,174	May	May 25, 1948

FOREIGN PATENTS

Number	Country	Date
312,139	Germany	May 12, 1919
379,770	Great Britain	Aug. 31, 1933
503,257	Great Britain	Apr. 4, 1939
695,517	Germany	Aug. 27, 1940