# United States Patent [19]

**Grasty et al.**

[11] **3,802,555**

[45] **Apr. 9, 1974**


[54] **SURGICAL INSTRUMENT PACKAGE AND HANDLING PROCEDURE**


[75] Inventors: **William P. Grasty**, Zion; **Aldean W. Whitton, Jr.**, Northbrook, both of Ill.

[73] Assignee: **Abbott Laboratories**, North Chicago, Ill.



[22] Filed: **June 3, 1969**

[21] Appl. No.: **830,067**

[52] **U.S. Cl.**.....**206/223**, 128/303, 206/72, 206/370, 206/438, 206/499

[51] **Int. Cl.**..... **A45c 11/26**

[58] **Field of Search**..... 206/16 S, 16 E, 17.5, 43, 206/46 FC, 46 FR, 46 PV, 46 ST, 46 SG, 56 K, 56 A, 56 AS, 56 AT, 56 M, 63.2, 65 A, 65 K, 65 E, 72, 1.8; 217/26.5, 27; 220/9 F, 23.6, 97, 4 E, 16, 23.8, 97 C, 97 D; 229/2.5; 128/1, 303



[56] **References Cited**

UNITED STATES PATENTS

| | | | |
|---|---|---|---|
| 2,501,379 | 3/1950 | Cranston | 206/72 |
| 3,013,656 | 12/1961 | Murphy, Jr. | 206/72 |
| 3,191,791 | 6/1965 | Jackson | 206/46 FC X |
| 3,231,074 | 1/1966 | Block | 220/97 X |
| 3,311,231 | 3/1967 | English, Jr. | 217/26.5 X |
| 3,429,432 | 2/1969 | Cabernoch et al. | 206/63.2 |
| 3,478,867 | 11/1969 | Weiss | 217/26.5 |
| 3,489,268 | 1/1970 | Meierhoefer | 206/17.5 |
| 2,107,239 | 2/1938 | Eckhoff | 206/1.8 |
| 3,396,839 | 8/1968 | Shannon et al. | 206/63.2 |
| 3,467,247 | 9/1969 | Weiss | 206/72 |
| 3,285,409 | 11/1966 | Loran | 206/72 X |



*Primary Examiner*—Joseph R. Leclair
*Assistant Examiner*—Steven E. Lipman
*Attorney, Agent, or Firm*—Sherman & Shalloway



[57] **ABSTRACT**

Disclosed herein is a surgical instrument package for operating components and an instrument handling procedure incorporating highly desirable safety features. The package of this invention includes several trays shaped for nesting or stacking with compartments in each tray for receiving surgical instruments. The instruments are arranged in the trays in order of use with the overlying tray exposing all the instruments necessary for the first phase or sub-procedure of the operation while effectively guarding against inadvertently picking up instruments to be used in the subsequent sub-procedures.


**14 Claims, 2 Drawing Figures**

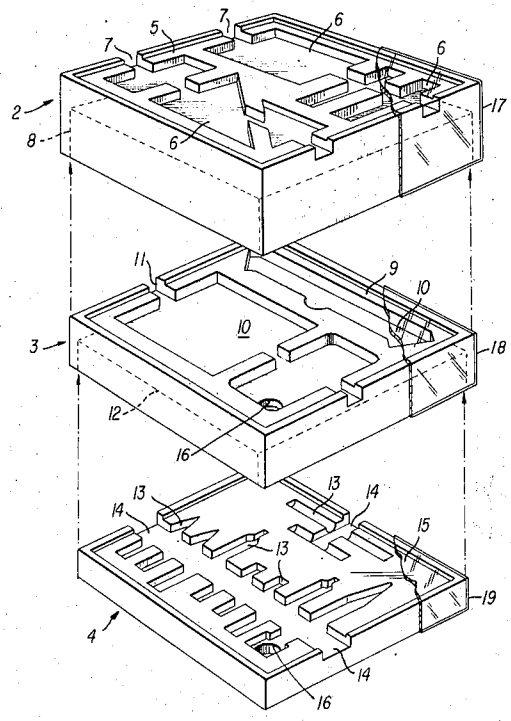

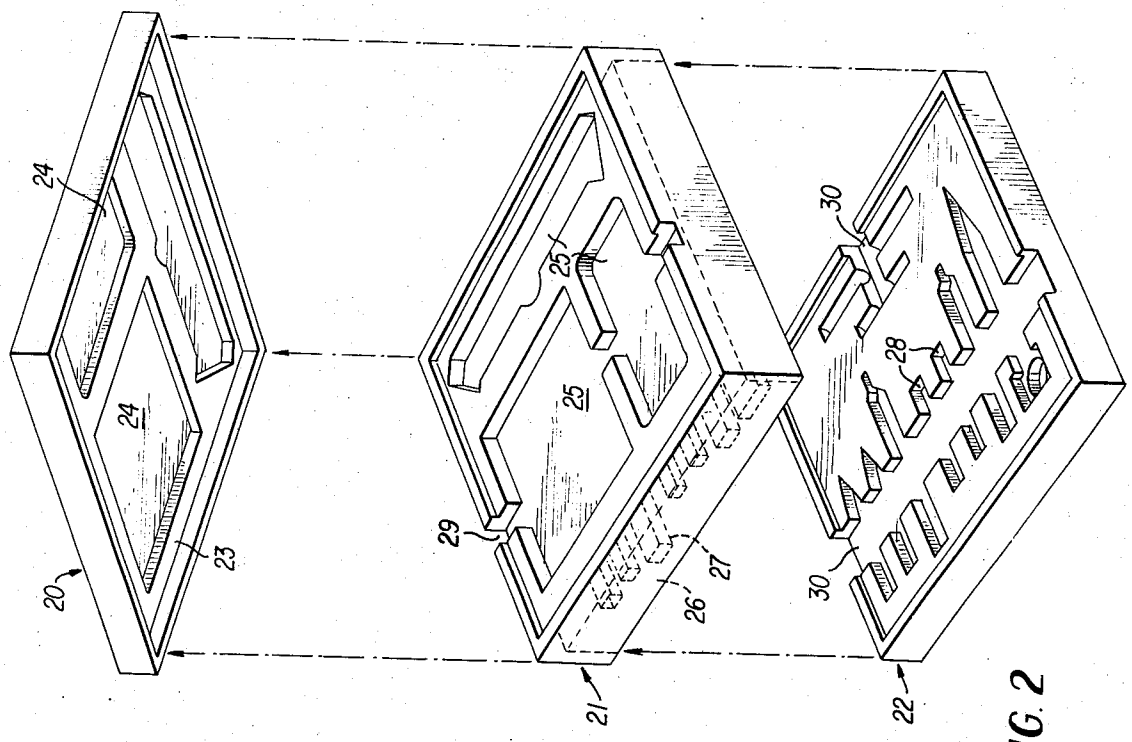


FIG. 2

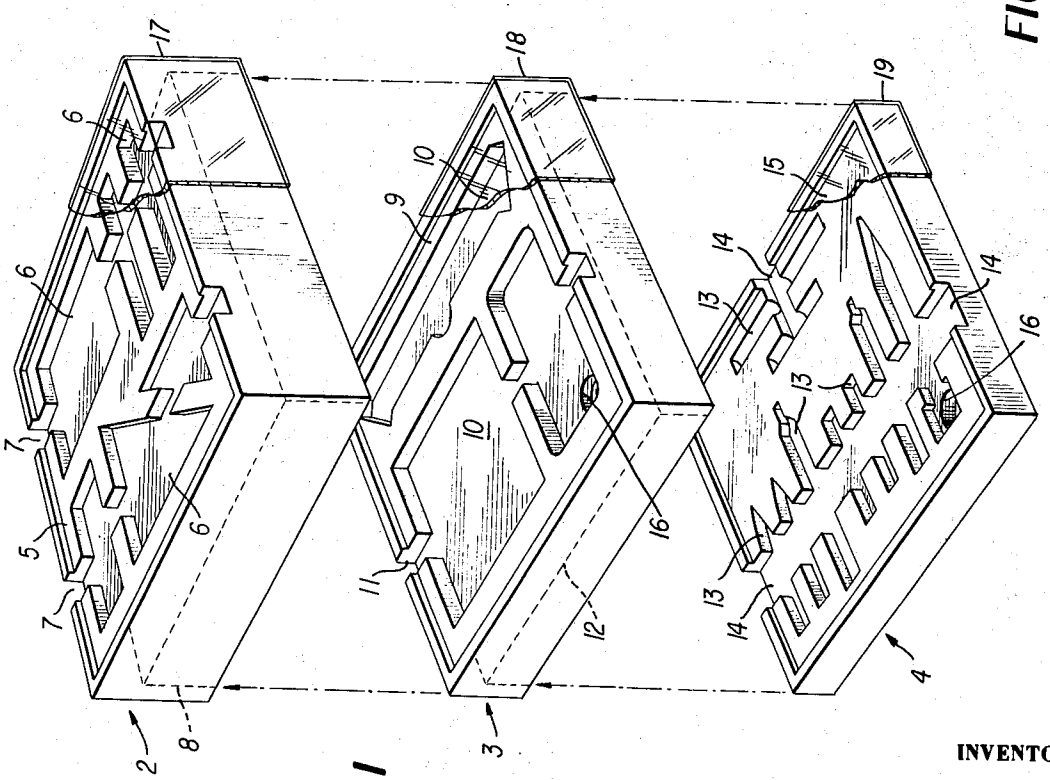


FIG. 1

INVENTORS

William P. Grasty

Aldean W. Whitton Jr

BY Sherman & Shalloway

ATTORNEYS

# SURGICAL INSTRUMENT PACKAGE AND HANDLING PROCEDURE

This invention relates to the art of special packages adapted for receiving the instruments used in a surgical operation. The invention also relates to the art of material handling and a special relation of the instruments used in a surgical operation so as to decrease the possibility of human error during the operation.

As used herein, the term "package" is considered generic to articles such as but not limited to "trays," "receptacles," "receivers," etc., which may be adapted to receive a group of operating instruments.

As further used herein, the term "instruments" or "operating instruments" is considered to include, but not be limited to, all hand tools, syringes, hypodermics, needles, clamps, swabs, sponges, scissors, scalpels, sutures, medicament containers such as vials and ampules, forceps, cannula, razor, anteceptics, bandages, probes, catheters, dilators, curettes, crushers, saws, shears, ligators, scarifiers, obstetric tractors, tweezers, etc.

In the course of complex surgical operations of today, many instruments are employed. Often times, the operation entails several specifically delineable steps or sub-procedures such as preparation of the area of surgery, anesthesia administration, operation per se, sewing and finishing up steps.

It has been the practice heretofore to arrange all the instruments in trays or loosely on a table or tables around the operating table for access by the surgeon and his assistants. This arrangement for handling the instruments is convenient from the standpoint that all the instruments are readily at hand, but sometimes can cause confusion when an assistant gets "turned around" or fails to recognize the proper instrument or gets the proper instrument confused with a similarly constructed instrument positioned adjacent or near the instrument that should be used.

The instruments are usually carried on a large tray which has been sterilized. Sterile instruments fill the tray and are ready for use immediately upon the tray being brought into the operating room. This arrangement has certain draw backs in that it is sometimes desirable or necessary to perform the operation in steps wherein either the same person would perform each of the separately identified steps or, as is more generally the case; a nurse, intern, or other assistant will perform the pre-operation procedure followed by the operation per se by the surgeon and then the finishing up procedure performed by yet another assistant or the same nurse or intern who did the preparatory steps. In these situations, the exposure of the instruments to the atmosphere over an extended length of time might on infrequest occasions result in contamination or other deleterious effects which should be avoided if at all possible.

A yet more likely mishap would be the use of an improper instrument, thus, not only possibly resulting in an improper performance of the particular step, but, assuredly causing that particular instrument not to be available when needed later on in the operating procedure per se.

A still further possibility when all the instruments are arranged in a single tray would be to spill any of several liquids that are employed in the operating procedure and contaminate the entire tray of instruments.



While some of the above-noted draw backs might be overcome by the provision of separate trays of instruments with possibly the location of related components in the individual trays, the possibility of selecting an improper instrument or reaching for the instrument from a wrong tray still exists. Further, it is also possible to spill liquids into one of the several trays positioned about the operating table and, thus, contaminate the instruments of that particular tray.

Having the above-discussed state of the prior art in mind, the present invention is designed to provide an instrument handling procedure and packaging arrangement for instruments used in a surgical operation and overcome the draw backs of the prior art instrument packaging and handling.

The present invention provides a package for the instruments used in an operating procedure and, specifically, is concerned with arranging the associated or related instruments for each sub-procedure of the operation together and providing a tray for the related elements that renders inaccessible the instruments to be employed in subsequent subprocedures of the operation.

The present invention contemplates the use of a first tray having compartments or slots therein for receiving the instruments to be employed in the first operating sub-procedure. These instruments can be arranged in an order in this tray so that removal of the instruments is sequential during the course of the first sub-procedure to further guard against errors in selecting the instruments used in the operation being performed. The compartment for the associated instruments is provided in the top of the first tray and the bottom of the first tray is hollowed so as to telescopically fit over a second tray which contains in the upper surface thereof compartments for the instruments to be used in the second sub-procedure of the operation.

Each tray may be supplied with sterilized instruments and a vacuum sealed material enclosing the tray and instruments to maintain the instruments in their sterile condition. The instruments themselves may be of the disposable type being employed in some advanced hospital and operation practices. The tray itself may also be disposable so that as each of the instruments are sequentially removed from the tray and used, they may be disposed of and upon finishing the particular sub-procedure for which the related compartments are provided in the first tray, the tray itself may be removed and disposed of.

Further, in most all operating procedures today it is necessary to count the instruments and the more advantageous and safer approach is to return each instrument after its use to the compartment provided therefor in the upper surface of the tray so that upon the completion of each sub-procedure, one may look at the tray and check to see if all the compartments are filled and avoid the negligent leaving of an instrument or sponge, etc., in the patient. Thereafter, the entire package may be disposed of.

The second tray telescopically positioned beneath the first tray has the compartments in the upper surface thereof for receiving the related instruments for the second sub-procedure. This tray itself may also be sealed with the sterile instruments provided therein so that even should the first tray be removed and a liquid spilled on the second tray, same would not be contaminated because of the sealing material provided there-

over. Of course, once the sealing material has been removed, the open upper surface of the tray containing the related instruments of the sub-procedure could become contaminated upon the spilling of a liquid during the course of the operation. However, this spilling of the liquid would only effect the one particular sub-procedure and the tray containing the related instruments for that sub-procedure could be removed and another placed in its stead to quickly proceed with the operation.

If a third sub-procedure is readily delineable, the second tray would be provided with an opening in the lower surface thereof to telescopically receive a third tray carrying the related instruments for a third operating sub-procedure in the compartments of the upper surface thereof. This particular stacking arrangement for the trays containing the associated and related instruments of the particular sub-procedures could be extended to any number of sub-procedures which can be properly broken out or defined for the particular operation contemplated.

The trays may be constructed of a permanent material and supplied to hospitals so that the instruments may be placed in the compartments of each of the sub-procedure trays and sterilized with each sub-procedure tray sealed to avoid contamination until use. Also, the trays could be provided of inexpensive disposable material (e. g., expanded foam) for hospital use. With disposable trays, the trays themselves are sealed after sterilization, and immediately before the operation takes place the sterile instruments may be placed in the separate trays and then supplied to the operating room whereupon after completion of the operation the instruments may be removed for cleaning and sterilization while the tray can be disposed of.

Of the several advantages of the instrument package and handling procedure of this invention, probably the most important is the safety factor during the operation procedure which this invention enhances. Since the materials for a single sub-procedure are exposed only to the person performing that sub-procedure, the possibility of using instruments intended or designed for use in another sub-procedure would be avoided. Providing the trays with compartments for receiving the related instruments of a particular sub-procedure and replacing these instruments after they have been used enables a sure count of the instruments to avoid the possibility of leaving an instrument or sponge, etc. in the patient. All the instruments for the entire operation are available and readily at hand, but, the instruments associated with one particular sub-procedure are all that will be exposed at any given time. When that sub-procedure is completed, the tray carrying the instruments of that sub-procedure is removed, thus, exposing the tray below for the next sub-procedure. Contamination from sub-procedure to sub-procedure is eliminated since the overlying tray completely covers the underlying tray that is used for the subsequent sub-procedures.

Further, the underlying tray may be sealed to assure sterilization of the instruments even though a period of time may lapse from the completion of a first sub-procedure to the beginning of the second sub-procedure.

Another advantage of the contemplated package of the present invention is the provision of the instruments of each sub-procedure in a pre-determined relation to each other, for example, aligning each instrument along the tray in ascending or descending order of use. The compartments or the instruments of each sub-procedure may be aligned sequentially along the length of the tray with a channel provided intermediate the receiving compartments to facilitate removal of each instrument for use in the particular sub-procedure.

Having these advantages of the invention in mind, it is a primary object to provide a package for the instruments used in a surgical operation.

It is another object of this invention to provide a package for surgical instruments including a plurality of telescoping trays.

It is still another object of this invention to provide a package for surgical instruments including a plurality of trays having compartments in the upper surface thereof for receiving the surgical instruments and hollowed portions in the bottom surfaces thereof to overly the instruments of an underlying tray.

Still a further object of this invention is to provide a package for surgical instruments including a plurality of trays, each tray having instrument receiving compartments in the upper surface thereof and depending side walls for overlying a tray positioned therebeneath.

It is still a more specific object of this invention to provide a package for surgical instruments including a plurality of trays having compartments in the upper surface thereof, the compartments arranged in a linear order with a longitudinally extending channel traversing the compartments to facilitate removal of the instruments positioned in the compartments.

It is still a further object of this invention to provide a package for surgical instruments including trays having compartments in the upper surface thereof and the under surface of said trays being shaped as covers for sequentially arranged trays positioned therebeneath.

It is still a further object of this invention to provide a package for surgical instruments including a plurality of trays wherein the trays are stacked in a telescoping arrangement with the upper most tray containing a related group of components or instruments to be used in a delineated or clearly defined operation sub-procedure, the underlying trays each containing related or associated instruments to be used in subsequent surgical operation sub-procedures so that the package exposes only those instruments to be used in each particular sub-procedure until all of the instruments for that sub-procedure have been used and then the tray may be removed to expose the instruments of the underlying tray which are to be used in the following sub-procedure.

It is yet another object of this invention to provide a material handling process wherein all of the related components or instruments for one sub-procedure of a surgical operation are grouped together in such a manner as to effectively preclude exposure of instruments to be employed in a subsequent subprocedure.

These and other objects of the invention will become readily apparent to those of ordinary skill in the art to which this invention pertains when the following detailed description of an exemplary preferred embodiment is considered along with the accompanying drawings wherein:

FIG. 1 is an exploded perspective view of a package including a pair of trays adapted for nesting engagement;

FIG. 2 is an exploded perspective view of a modification.

Referring now to FIG. 1, there is shown a surgical instrument package in exploded perspective. The package is illustrated as including three trays, an upper tray 2, middle tray 3, and lower tray 4; but any desired or necessary number of trays is, of course, permissible. The trays 2, 3, and 4, are shown in exploded association to illustrate the details of each tray and the relation of each tray to the other.

Looking first at the upper tray 2 which will contain the instruments to be employed in the first sub-procedure of the surgical operation, it is seen that the upper surface of the tray 2 is integrally formed to provide a basin 5 having a plurality of instrument receiving compartments 6. These compartments are the shape of the particular instrument which they are designed to contain and it is often preferable to align the compartments 6 in a row as illustrated with the compartment at one extreme end of the row containing the first instrument to be used in the particular sub-procedure and the compartment at the opposite end of the row containing the last instrument to be used in the sub-procedure. The compartments between the two extreme compartments are arranged to receive the instruments in the order of their use starting with the instrument that will be first used, the instrument to be used next positioned adjacent next, etc. Of course, it is not necessary that the compartment 6 be shaped to mate exactly with the instruments which they are adapted to receive but this arrangement is preferable to lessen the possibility of mistake in placing the instruments in the trays.

The compartments 6 are interconnected by the channels 7 passing through the basin. The channel 7 provides a convenient instrument removing opening so that when one of the instruments in compartment 6 is needed, a person may remove same by gripping it in the area of the exposed portion extending through the channel 7. The channel 7 may be of the same depth as most of the compartments 6 to permit the person removing the instruments to grasp the instruments at the exposed area extending through the channel or the channel may extend below the depth of the compartments so that the user may remove the instruments by reaching under the instruments in the area of the channel and further assure that a good grip on the instruments is had before same are passed to another or used by the person removing it.

On the underside of the upper tray 2 is a pocket 8 which conforms substantially to the size and shape of the middle tray 3. This pocket 8 is defined by walls depending from the upper surface of the tray and a planar lower surface of the tray and is adapted to receive and overlie the middle tray 3 so that until all the instruments for the first sub-procedure are used and the upper tray 2 is removed, the instruments to be employed in the second sub-procedure will be inaccessible. This arrangement assures that should something be spilled on the upper tray 2, same would not contaminate the instruments contained in the middle tray 3. Further, since the instruments to be used in the second sub-procedure are not readily accessible, a safety factor is introduced to assure that an improper instrument is not used.

The upper portion of tray 3 is integrally formed to provide a basin 9 similar to basin 5 of tray 2. The basin includes compartments 10 which may be interconnected by the channels 11 with the instruments arranged in the compartments 10 in a manner similar to that described in relation to the fist sub-procedure instruments contained in the upper tray 2.

The lower surface of middle tray 3 is provided with a pocket 12 which mates with and is adapted to receive the lower tray 4. This telescoping arrangement of middle tray 3 and lower tray 4 permits protection of the instruments carried in the upper surface of the lower tray 4. Until all the instruments in the compartments 10 of middle tray 3 have been used and the tray removed, the instruments contained in the upper surface of tray 4 are indisposed and, thus, protected from contamination and inadvertent use by one performing a sub-procedure using the instruments carried in the middle tray 3.

The tray 4 is similar to trays 2 and 3, previously described, and is provided with compartments 13 which are interconnected by channels 14. These compartments are all situated in and integrally formed with a basin 15 which assures that the instruments within the compartments will not bulge out of the tray and interfere with the fit of the upper surface of the tray 4 and the pocket 12 of the tray 3. The lower surface of tray 4 may be provided with a pocket for receiving yet another tray containing the instruments for a related operation sub-procedure, or, if there is no further sub-procedure to be performed the lower portion of tray 4 may be solid. As shown in the lower most compartments of trays 3 and 4 in FIG. 1, cylindrical recesses 16 may be provided in the compartments so that a syringe could be positioned vertically for easy accessibility.

Each of trays 2, 3 and 4 may have a vacuum sealed material disposed across the edges of the side walls after sterilized instruments are placed in the compartments. For instance, as partially illustrated in FIG. 1, trays 2, 3 and 4 have vacuum sealed materials 17, 18 and 19 covering the basins thereof, respectively, with the materials extending over the trays and along the side walls sufficiently to assure complete sealing.

Yet another arrangement within the scope of this invention is a package similar to that previously described wherein the related upper middle and lower trays have co-operating compartments in the lower surface of an upper tray and the upper surface of the tray positioned immediately therebeneath. Referring to FIG. 2, this embodiment of the invention is illustrated with only two co-operating trays, but any number of co-operating trays could be provided.

The package shown includes a cover 20, an upper tray 21, and a lower tray 22. The cover may have a flat upper surface which overlies the upper tray 21. The lower surface of cover 20 is provided with a pocket 23 that telescopes over the upper tray 21. The pocket 23 is provided with compartments 24 shaped to receive half of the instrument or group of instruments positioned in the compartments in the upper surface of the tray 21. The tray 21 may have a substantially planar upper surface except for the compartments 25 which cooperate with the compartments 24 in the lower surface of the cover to form a chamber for receiving the instruments for a first sub-procedure of the surgical operation. It is also possible to form the facing surfaces with basins as shown in FIG. 2, but with the co-

operating compartments forming instrument receiving chambers, the basins are not necessary. The chamber formed by the cooperating compartments **24** and **25** in the cover and upper surface of tray **21** respectively may be shaped substantially the shape necessary to accommodate the particular instruments used in the subprocedure or the chamber may merely receive the instruments without conforming to the shape thereof. Channels **29** and **30** may be provided in the trays to facilitate removal of the instrument.

The lower surface of the upper tray **21** is provided with a pocket **26** adapted to telescope over and receive the lower tray **22.** The bottom surface of the upper tray **21** contains compartments **27** which form half a chamber and when the upper tray and lower tray are in their stacked relation, the chamber is completed by the compartment **28** in the upper surface of the lower tray **22.** Lower tray **22** again may have a basin or a substantially planar upper surface with the compartments **28** which in conjunction with the compartments **27** form the chamber for receiving the instruments for the subprocedure carried by the lower tray **22.**

In operation, the package of instruments for the particular surgical operation is brought into the operating room in a stacked relation. The cover **20** is removed and placed on a table or a position adjacent the remaining portion of the package in an inverted position. As the instruments carried by the upper tray **21** are used in the first sub-procedure, they may be placed in the compartments **24** of the exposed under surface of the cover **20.** When all the instruments for the first subprocedure contained in the upper tray **21** have been employed and, thus, removed from the upper tray **21** and placed in the compartments of the exposed under surface of the cover **20,** the upper tray **21** is removed and inverted and placed on the cover **20.** Thus, all the instruments may be accounted for by their placement in the cover **20** and once the instruments have been used they are covered by the mating surface of the upper tray **21** which is positioned in an overlying relation over the cover **20.** By removing the upper tray **21,** the instruments in the lower tray **22** are exposed and, thus, the second sub-procedure may begin. As the instruments in the compartments **28** of the lower tray **22** are used, they are placed in the compartments **27** in the exposed pocket **26** of the upper tray **20.** Since the compartments **27** mate with and may be shaped to accommodate the instruments of the lower tray **22,** an accounting may be clearly recognized for all the instruments being used in the second subprocedure. Once the instruments have all been used in the lower tray **22,** the tray is inverted and placed over the upper tray **20** and into the pocket **26** covering the instruments in the compartments **27.** The package is then completed and may be inverted in toto for removal to a cleaning and sterilizing station for the preparation before the next operation.

A clear extrapolation of the two illustrated preferred embodiments is a package where the trays do not nest, but have the co-operating compartments in the facing surface of the stacked trays. This embodiment is less preferred, however, since without the nesting arrangement the trays are less stable and may tend to shift in relation to each other.

Preferred embodiments of the invention having been described, the invention is to be limited only by the scope of the appended claims.

What is claimed is:

**1.** An instrument package for use in surgical operations comprising

a lower tray having a support surface with a plurality of recessed compartments therein to receive surgical instruments; and

an upper tray having a lower surface, an upper surface with a plurality of recessed compartments therein to receive surgical instruments, and wall means depending from the periphery of said upper surface to define with said lower surface a pocket having a shape to mate with said lower tray, said wall means extending above the periphery of said upper surface such that said upper surface forms a basin with said wall means,

said upper tray being superposed over said lower tray with said support surface of said lower tray confined in said pocket whereby said lower tray is protected from contamination by said pocket in said upper tray.

**2.** An instrument package for use in surgical operations comprising

a lower tray having a support surface with a plurality of recessed compartments therein to receive surgical instruments, and a peripheral wall disposed around and extending above said support surface such that said support surface forms a basin with said peripheral wall; and

an upper tray having a lower surface, an upper surface with a plurality of recessed compartments therein to receive surgical instruments, and wall means depending from the periphery of said upper surface to define with said lower surface a pocket having a shape to mate with said lower tray,

said upper tray being superposed over said lower tray with said support surface of said lower tray confined in said pocket whereby said lower tray is protected from contamination by said pocket in said upper tray.

**3.** A package for instruments used in surgical operations as defined in claim **2** wherein said upper tray and said lower tray are each integrally formed.

**4.** An instrument package for use in surgical operations comprising

a plurality of surgical instruments;

a lower tray having a support surface with a plurality of recessed compartments therein receiving predetermined ones of said instruments; and

an upper tray having a lower surface, an upper surface with a plurality of recessed compartments therein receiving the others of said instruments, and wall means depending from the periphery of said upper surface to define with said lower surface a pocket having a shape to mate with said lower tray,

said upper tray being superposed over said lower tray with said support surface of said lower tray confined in said pocket whereby said instruments in said lower tray are protected from contamination by said pocket in said upper tray.

**5.** A package for instruments used in surgical operations as defined in claim **4** wherein said wall means of said upper tray extends above the periphery of said upper surface such that said upper surface forms a basin with said wall means.

**6.** A package for instruments used in surgical operations as defined in claim **4** wherein said lower tray in-

cludes a peripheral wall disposed around and extending above said support surface such that said support surface forms a basin with said peripheral wall.

**7.** A package for instruments used in surgical operations as defined in claim **4** wherein there are a plurality of said upper trays in superposed relation, each of said plurality of upper trays having instrument receiving recessed compartments in the upper surface thereof and wall means defining a pocket with the lower surface thereof to confine the upper surface of the one of said upper trays immediately thereunder.

**8.** A package for instruments used in surgical operations as defined in claim **4** wherein said recessed compartments of each of said upper and lower trays are interconnected by a channel for assistance in removing instruments placed therein.

**9.** A package for instruments used in surgical operations as defined in claim **4** wherein said recessed compartments of said upper and lower trays include cylindrical recesses to permit vertical positioning of said surgical instruments.

**10.** A package for instruments used in surgical operations as defined in claim **4** wherein said lower surface in said upper tray has a plurality of recessed compartments therein which cooperate with said recessed compartments in said support surface of said lower tray to form instrument receiving chambers when said upper and lower trays are in stacked superposed relation.

**11.** A package for instruments used in surgical operations as defined in claim **4** wherein said upper and lower trays containing instruments are sterilized and have a vacuum sealed material sealing each tray separately.

**12.** A package for instruments used in surgical operations as defined in claim **4** wherein said recessed compartments in said upper tray are shaped to mate with said others of said instruments, said others of said instruments being utilized in a first operation subprocedure, and said recessed compartments in said lower tray are shaped to mate with said predetermined ones of said instruments, said predetermined ones of said instruments being utilized in a second operation subprocedure performed after said first operation subprocedure whereby said lower tray is bared by removal of said upper tray to permit access to said predetermined ones of said instruments only after said first operation subprocedure is completed to prevent contamination of said predetermined ones of said instruments during said first operation subprocedure.

**13.** A package for instruments used in surgical operations as defined in claim **12** wherein said recessed compartments in said lower tray are arranged along an edge of said support surface in accordance with order of use of said predetermined ones of said instruments during said second operation subprocedure, and said recessed compartments in said upper tray are arranged along an edge of said upper surface in accordance with order of use of others of said instruments during said first operation subprocedure.

**14.** A package for instruments used in surgical operations as defined in claim **4** wherein said recessed compartments in said lower tray are shaped to mate with said predetermined ones of said instruments and are aligned along an edge of said support surface in arrangement in accordance with order of use of said predetermined ones of said instruments.

* * * * *