(No Model.) 27 Sheets—Sheet 1.

H. E. SMYSER.

BAG MAKING AND PACKAGING MACHINE.

No. 564,722. Patented July 28, 1896.

FIG. 1.

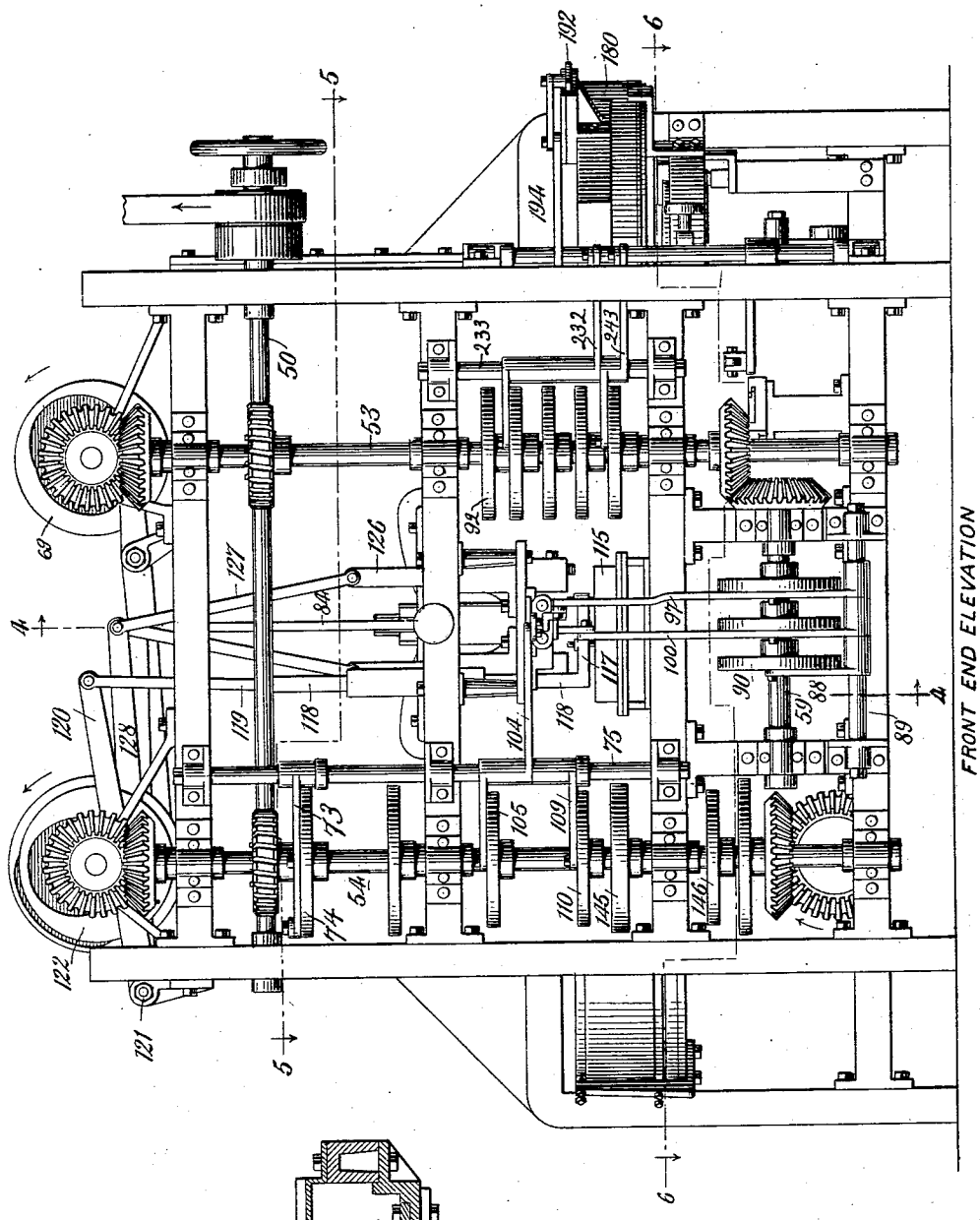

FIG. 11.

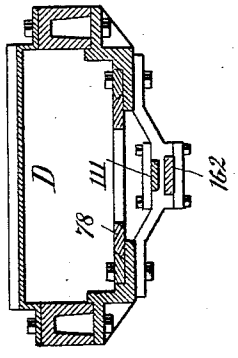

WITNESSES:

C. E. Ashley

H. W. Lloyd

INVENTOR:

Henry E. Smyser,

By his Attorneys,

Arthur C. Fraser & Co.

THE NORRIS PETERS CO., PHOTO-LITHO., WASHINGTON, D. C.

(No Model.) 27 Sheets—Sheet 2.

H. E. SMYSER.

BAG MAKING AND PACKAGING MACHINE.

No. 564,722. Patented July 28, 1896.

FIG. 2.

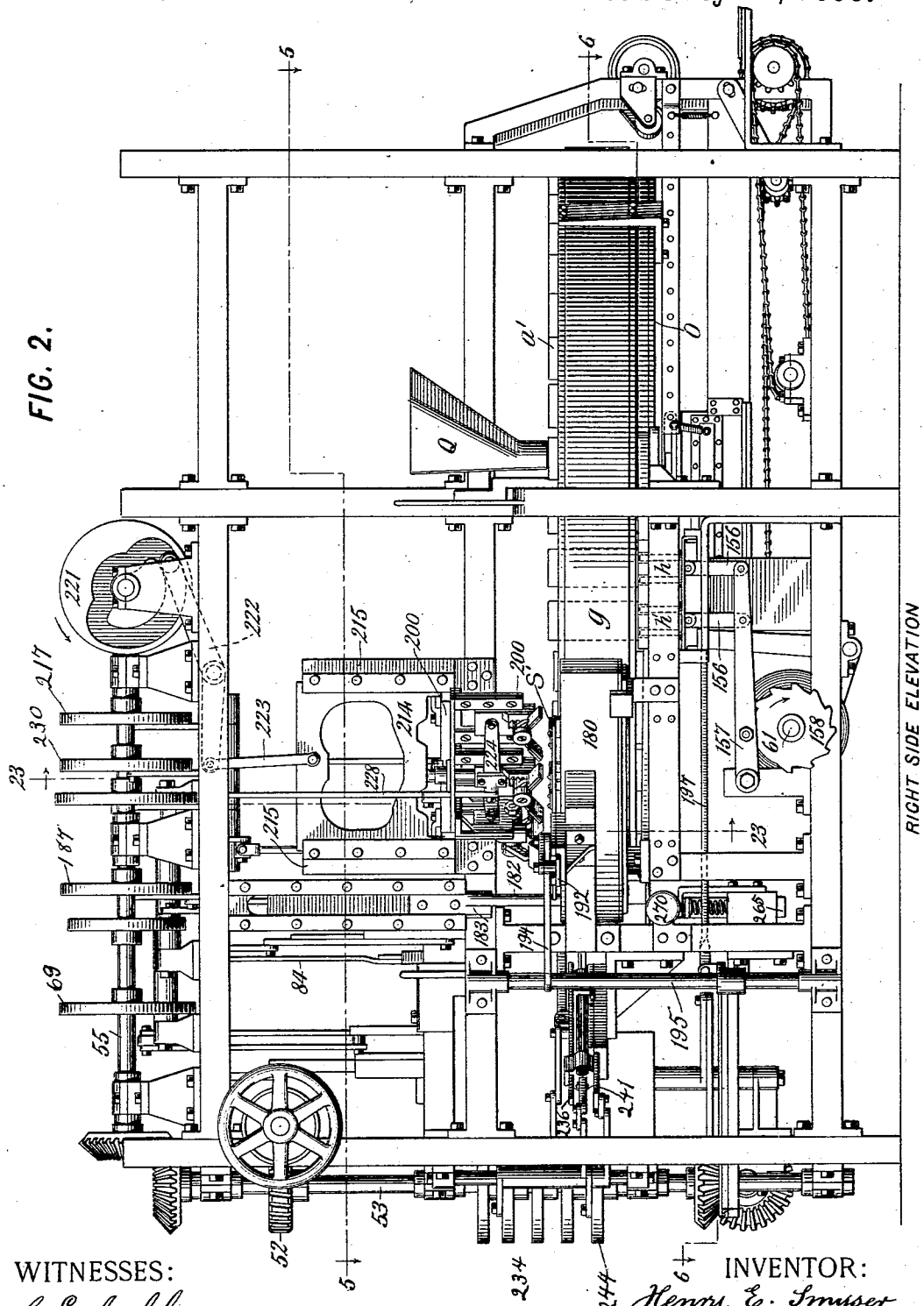

WITNESSES:

C. E. Ashley

H. W. Lloyd.

INVENTOR:

Henry E. Smyser,

By his Attorneys,

Arthur G. Brown & Co.

THE NORRIS PETERS CO., PHOTO-LITHO., WASHINGTON, D. C.

(No Model.) 27 Sheets—Sheet 3.

H. E. SMYSER.

BAG MAKING AND PACKAGING MACHINE.

No. 564,722. Patented July 28, 1896.

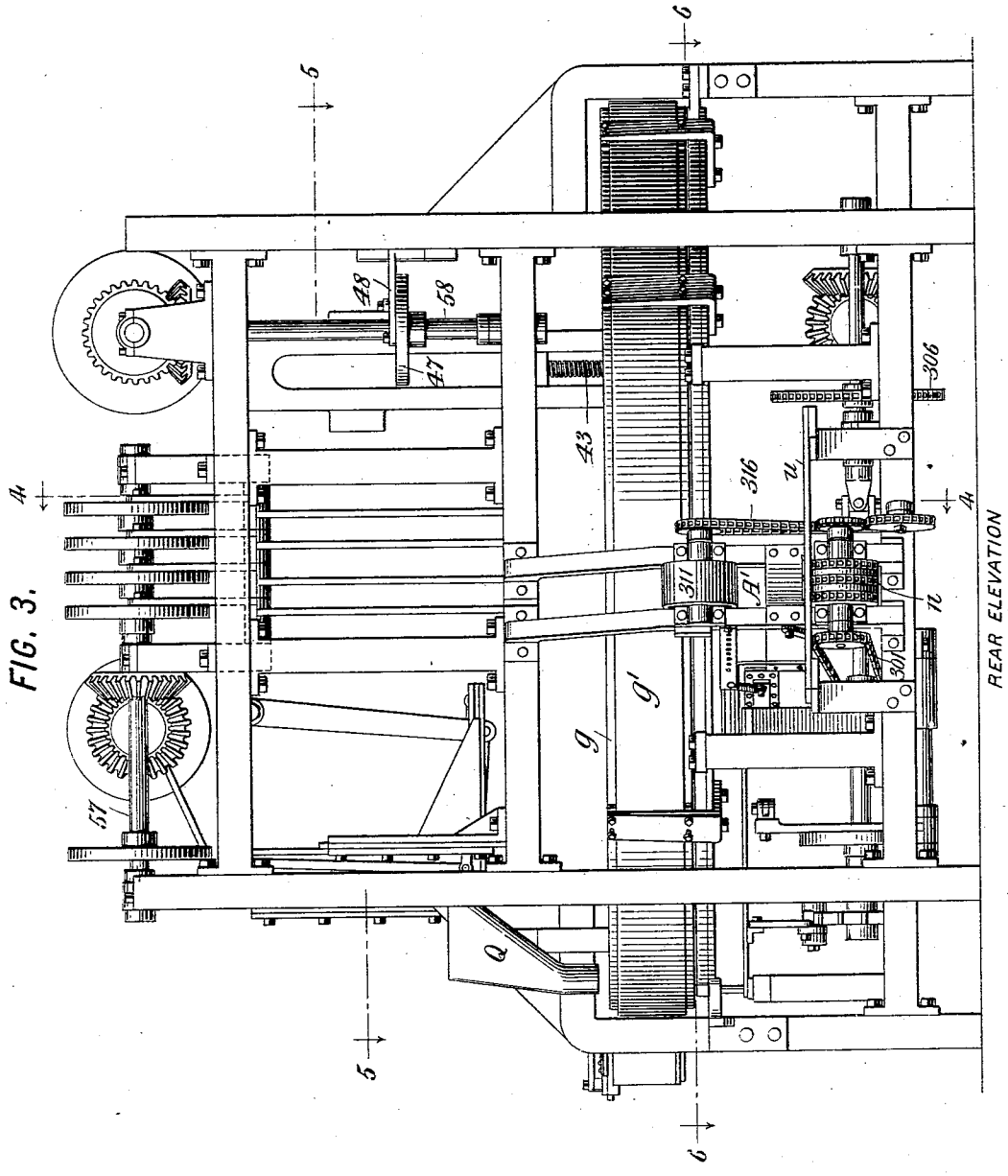

FIG. 3.

WITNESSES:

C. E. Ashley

H. W. Lloyd.

INVENTOR:

Henry E. Smyser,

By his Attorneys,

Arthur G. Dreier & Co.

THE NORRIS PETERS CO., PHOTO-LITHO., WASHINGTON, D. C.

(No Model.) 27 Sheets—Sheet 4.

H. E. SMYSER.

BAG MAKING AND PACKAGING MACHINE.

No. 564,722. Patented July 28, 1896.

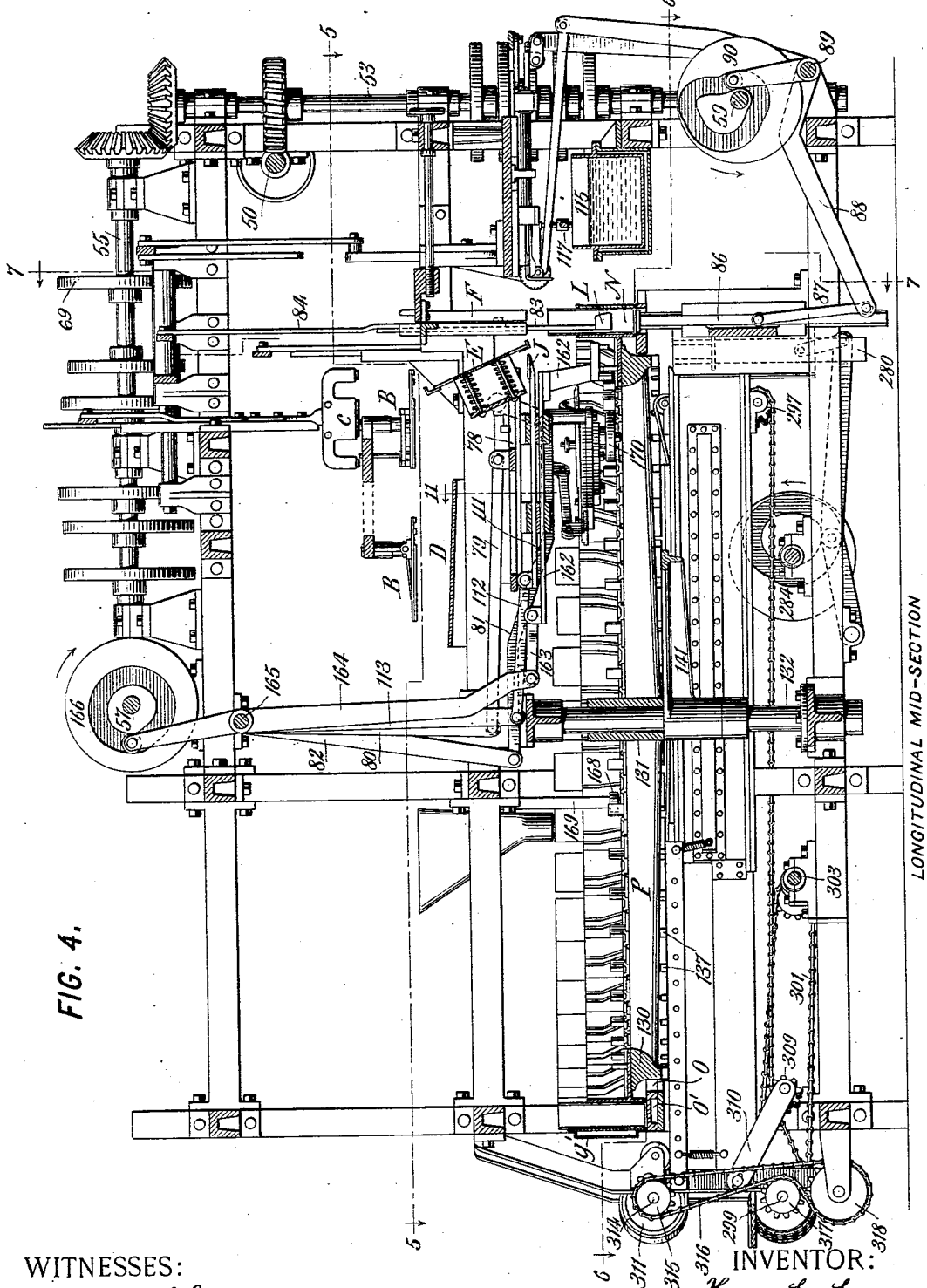

FIG. 4.

WITNESSES:
C. E. Ashley
H. W. Lloyd.

INVENTOR:
Henry E. Smyser,
By his Attorneys,
Attorneys

THE NORRIS PETERS CO., PHOTO-LITHO., WASHINGTON, D. C.

(No Model.) 27 Sheets—Sheet 5.

H. E. SMYSER.

BAG MAKING AND PACKAGING MACHINE.

No. 564,722. Patented July 28, 1896.

FIG. 5.

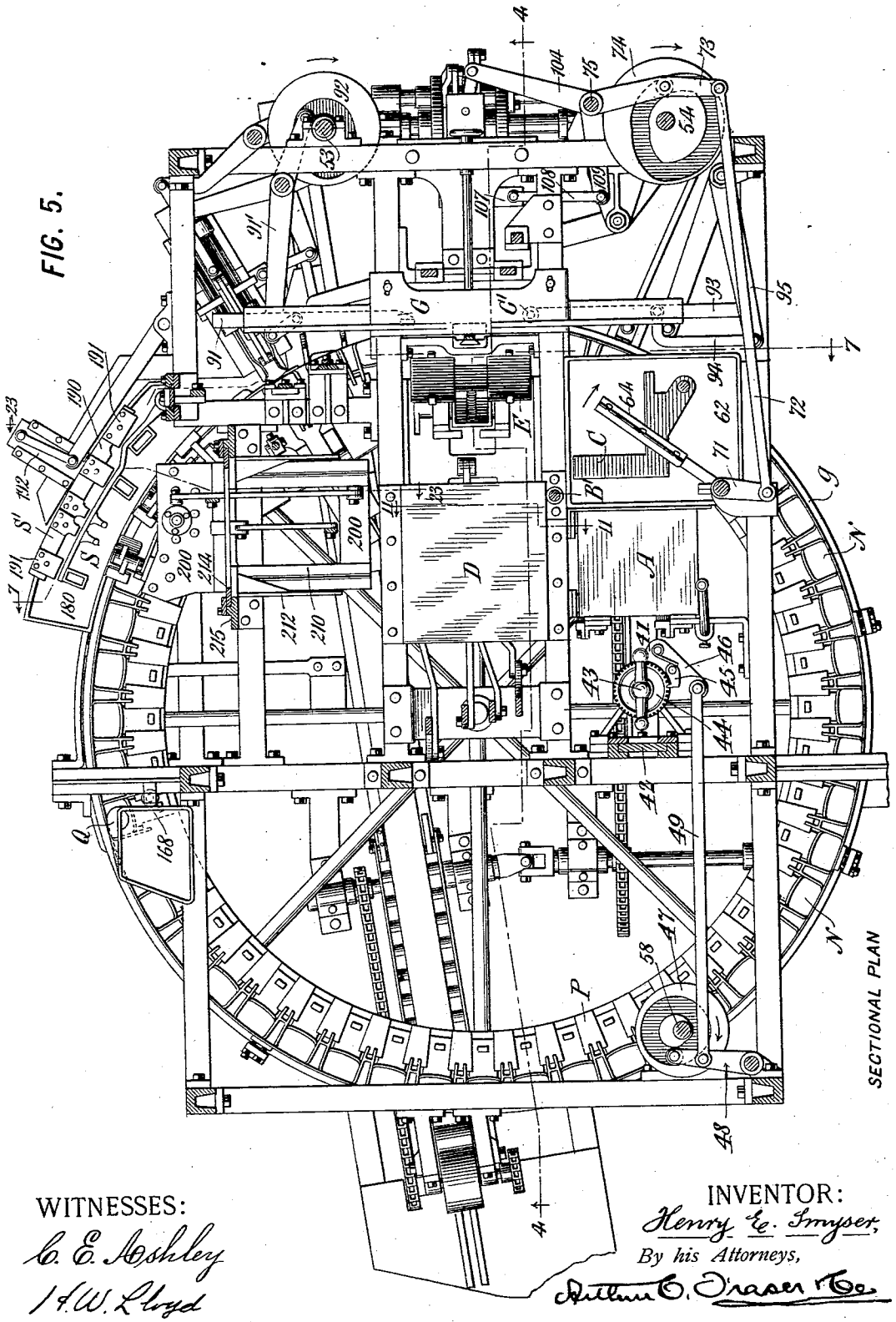

SECTIONAL PLAN

WITNESSES:

C. E. Ashley

H. W. Lloyd

INVENTOR:

Henry E. Smyser,

By his Attorneys,

Arthur O. Fraser & Co.

THE NORRIS PETERS CO., PHOTO-LITHO., WASHINGTON, D. C.

(No Model.) 27 Sheets—Sheet 6.

H. E. SMYSER.

BAG MAKING AND PACKAGING MACHINE.

No. 564,722. Patented July 28, 1896.

FIG. 6.

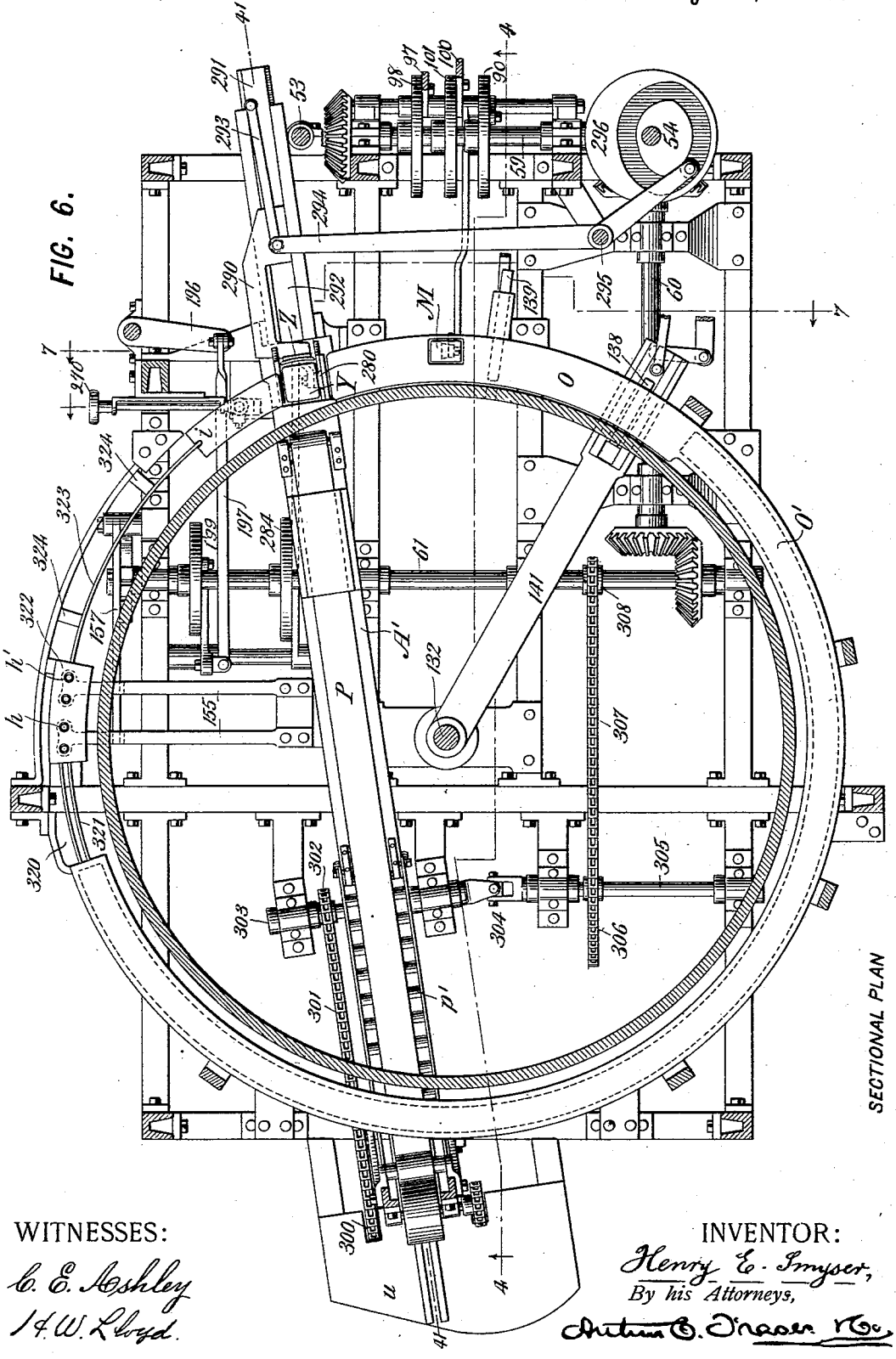

SECTIONAL PLAN

WITNESSES:

C. E. Ashley

H. W. Lloyd.

INVENTOR:

Henry E. Smyser,

By his Attorneys,

Arthur B. Draper & Co.

THE NORRIS PETERS CO., PHOTO-LITHO., WASHINGTON, D. C.

(No Model.) 27 Sheets—Sheet 7.

H. E. SMYSER.

BAG MAKING AND PACKAGING MACHINE.

No. 564,722. Patented July 28. 1896.

FIG. 7.

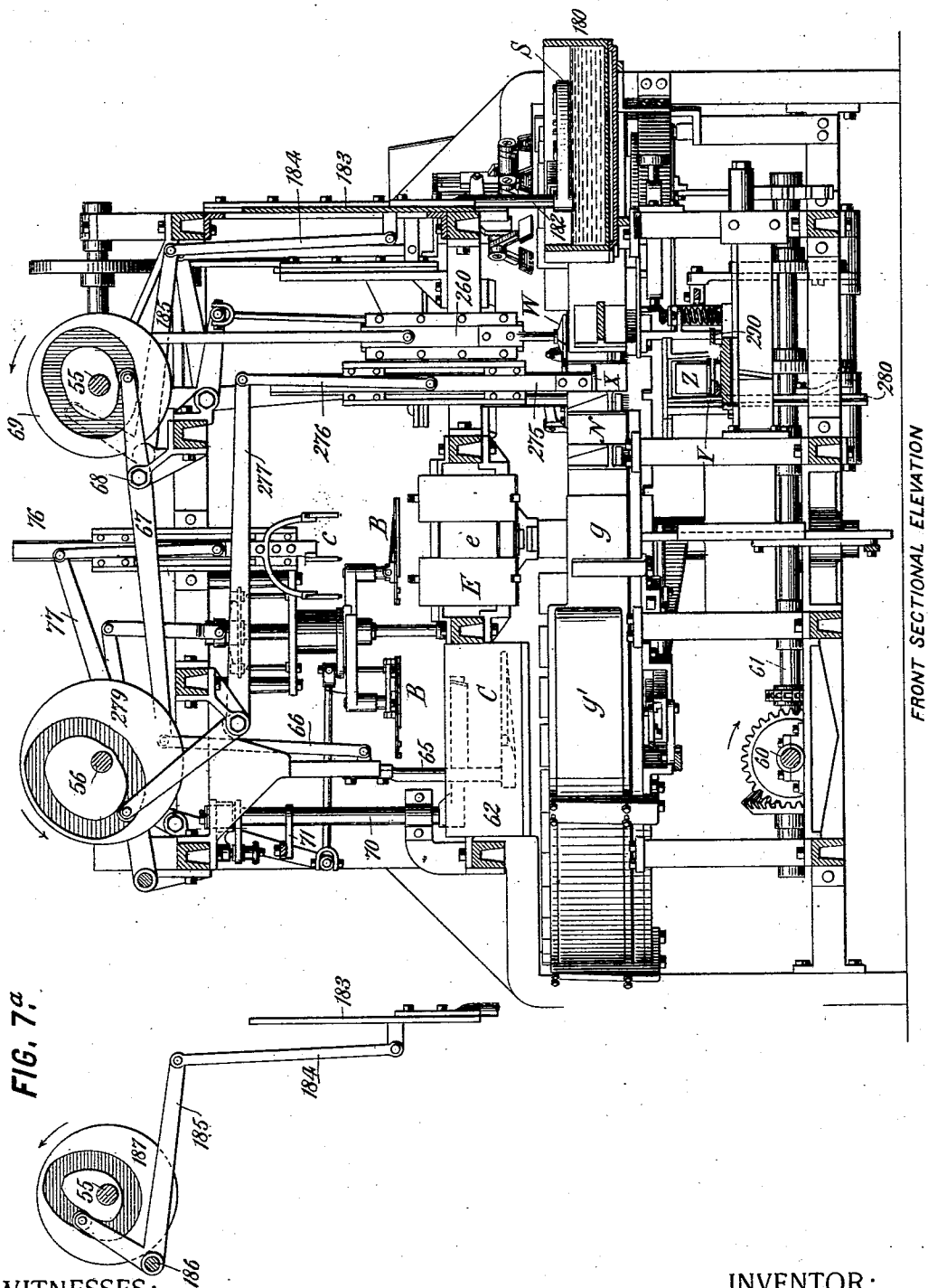

FIG. 7a.

WITNESSES:

C. E. Ashley

H. W. Lloyd.

INVENTOR:

Henry E. Smyser,

By his Attorneys,

Arthur O. Fraser & Co

THE KORRIS PETERS CO., PHOTO-LITHO., WASHINGTON, D. C.

(No Model.) 27 Sheets—Sheet 8.

H. E. SMYSER.

BAG MAKING AND PACKAGING MACHINE.

No. 564,722. Patented July 28, 1896.

FIG. 8.

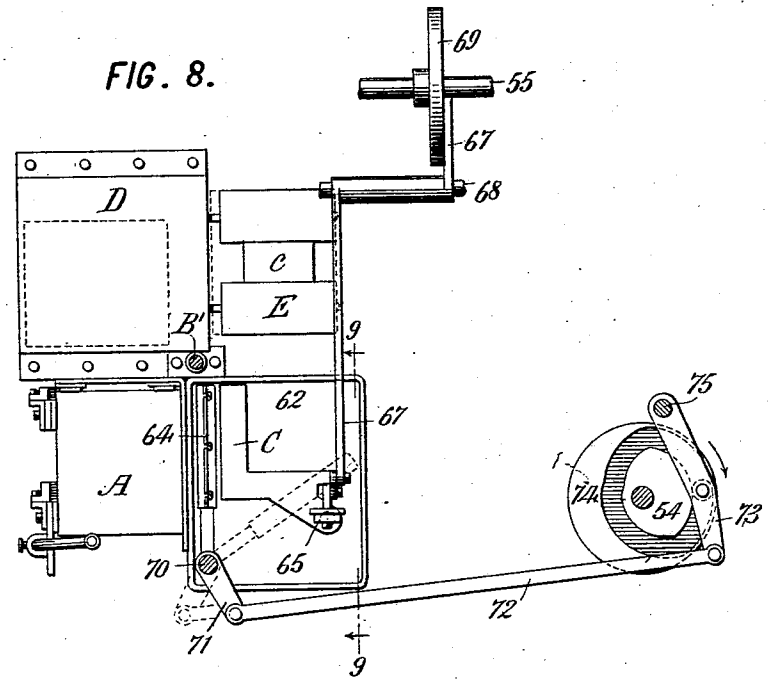

FIG. 9.

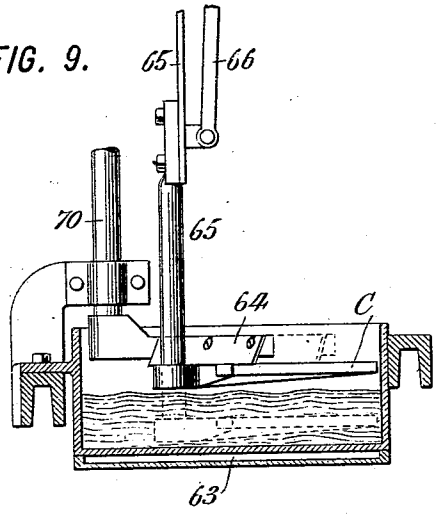

FIG. 10.

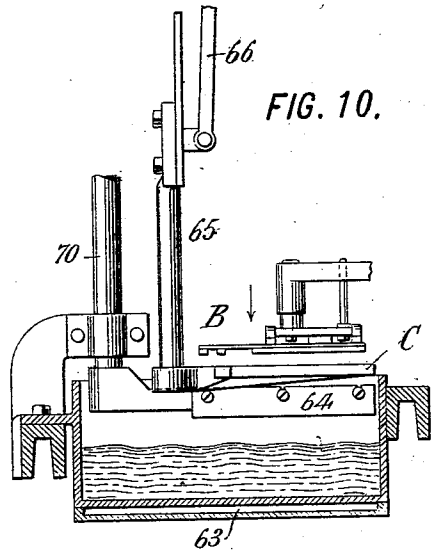

PASTING MECHANISM

WITNESSES:

C. E. Ashley

H. W. Lloyd.

INVENTOR:

Henry E. Smyser,

By his Attorneys,

Arthur C. Fraser & Co.

THE NORRIS PETERS CO., PHOTO-LITHO., WASHINGTON, D. C.

(No Model.) 27 Sheets—Sheet 9.

H. E. SMYSER.

BAG MAKING AND PACKAGING MACHINE.

No. 564,722. Patented July 28, 1896.

FIG. 12.

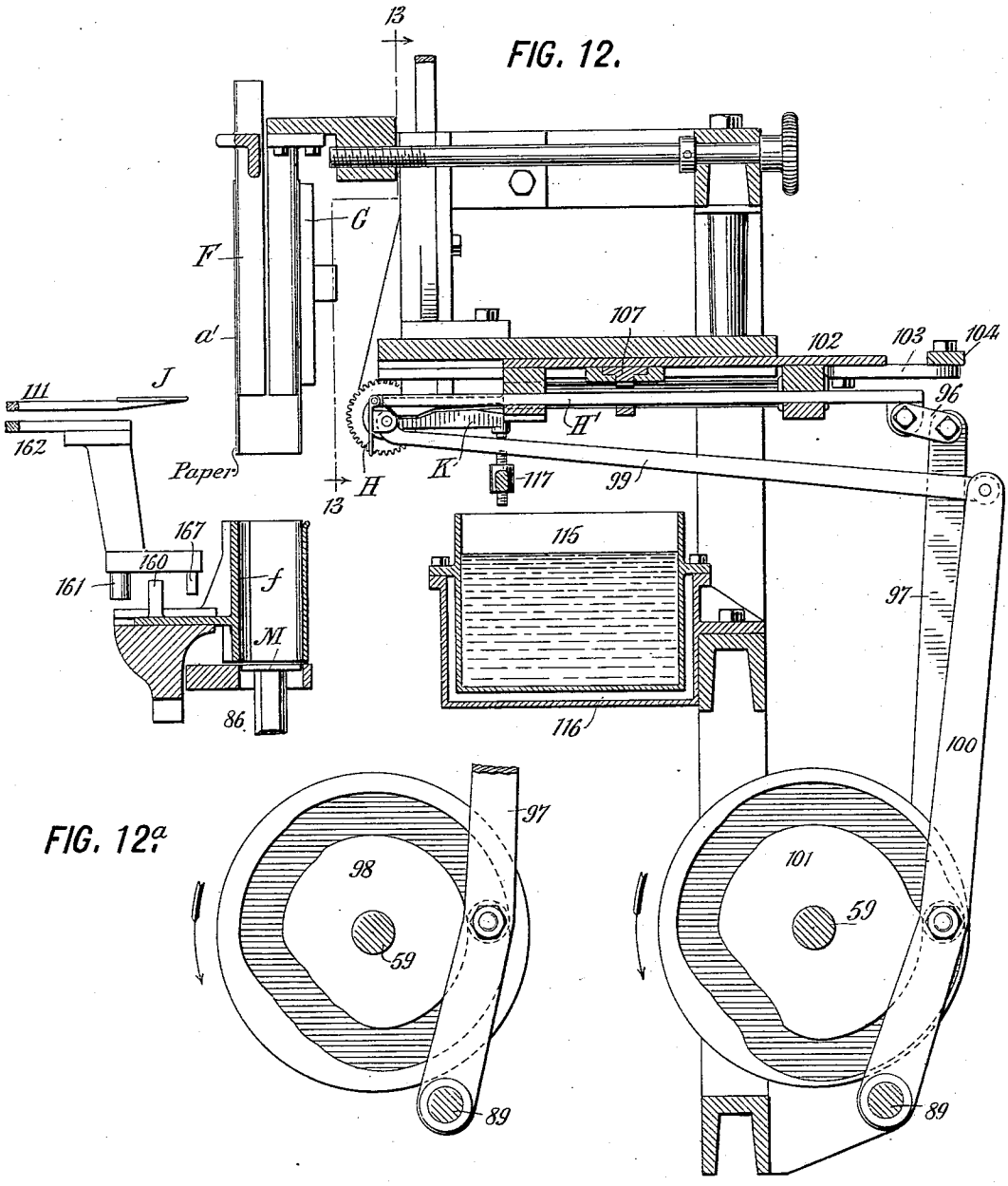

FIG. 12a.

BOTTOM CLOSING MECHANISM

FIG. 22.

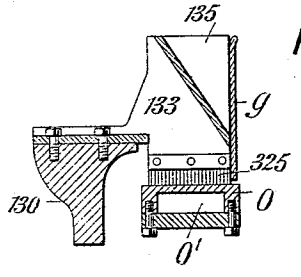

WITNESSES:
C. E. Ashley
H. W. Lloyd

INVENTOR:
Henry E. Smyser,
By his Attorneys,
Arthur C. Fraser & Co.

THE NORRIS PETERS CO., PHOTO-LITHO., WASHINGTON, D. C.

(No Model.) 27 Sheets—Sheet 10.

H. E. SMYSER.

BAG MAKING AND PACKAGING MACHINE.

No. 564,722. Patented July 28, 1896.

FIG. 13.

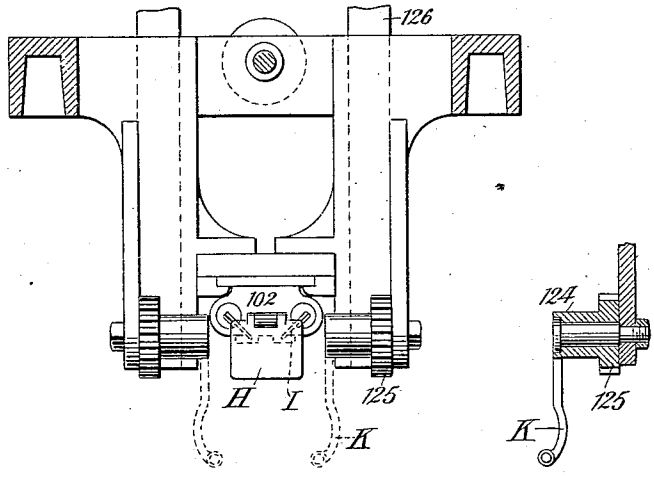

FIG. 14.

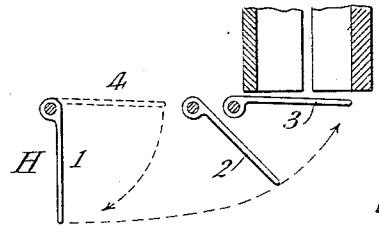

BOTTOM CLOSING MECHANISM

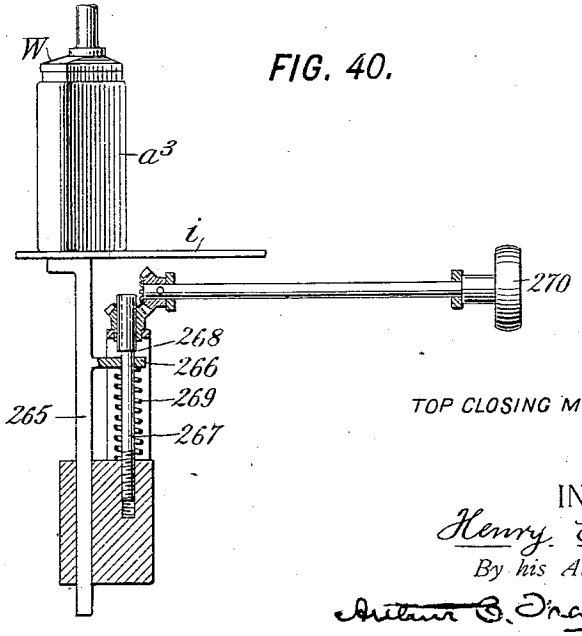

FIG. 40.

TOP CLOSING MECHANISM

WITNESSES:
C. E. Ashley
H. W. Lloyd.

INVENTOR:
Henry E. Smyser,
By his Attorneys,
Arthur B. Fraser & Co.

THE NORRIS PETERS CO., PHOTO-LITHO., WASHINGTON, D. C.

(No Model.) 27 Sheets—Sheet 11.

H. E. SMYSER.

BAG MAKING AND PACKAGING MACHINE.

No. 564,722. Patented July 28, 1896.

FIG. 15.

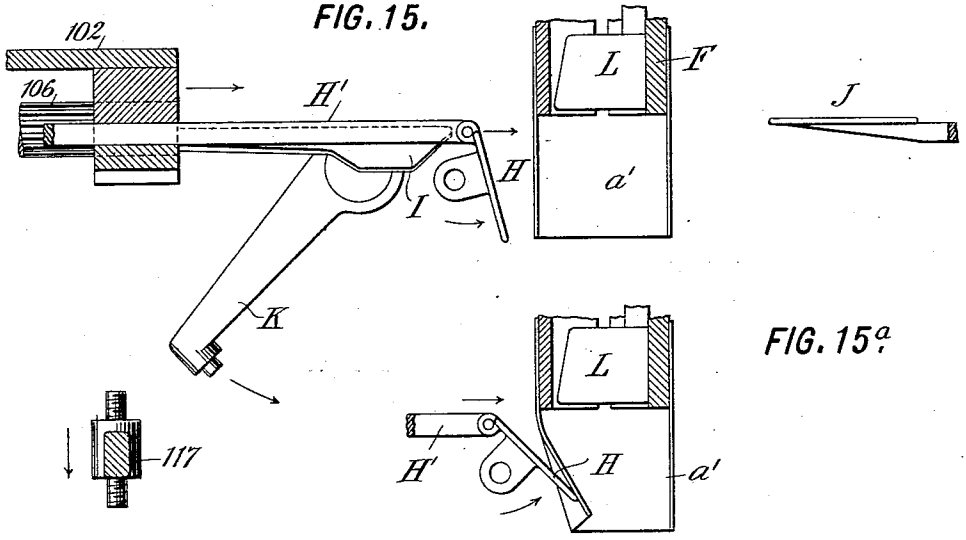

FIG. 15a.

FIG. 15b.

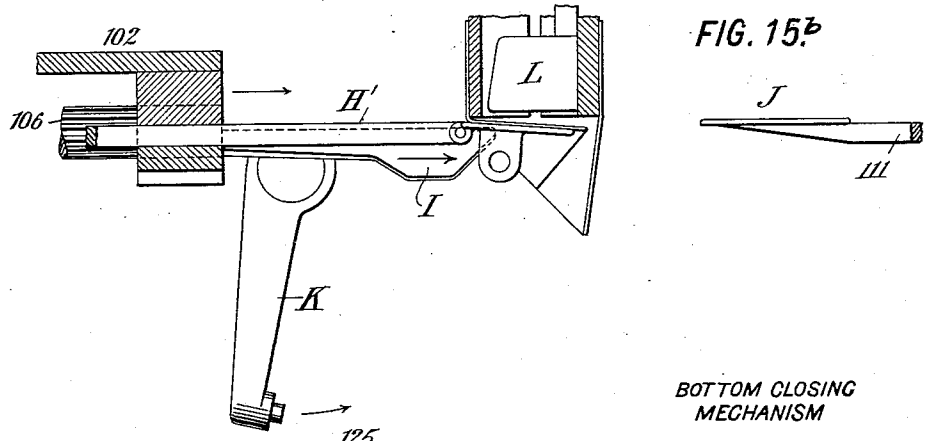

BOTTOM CLOSING MECHANISM

FIG. 16.

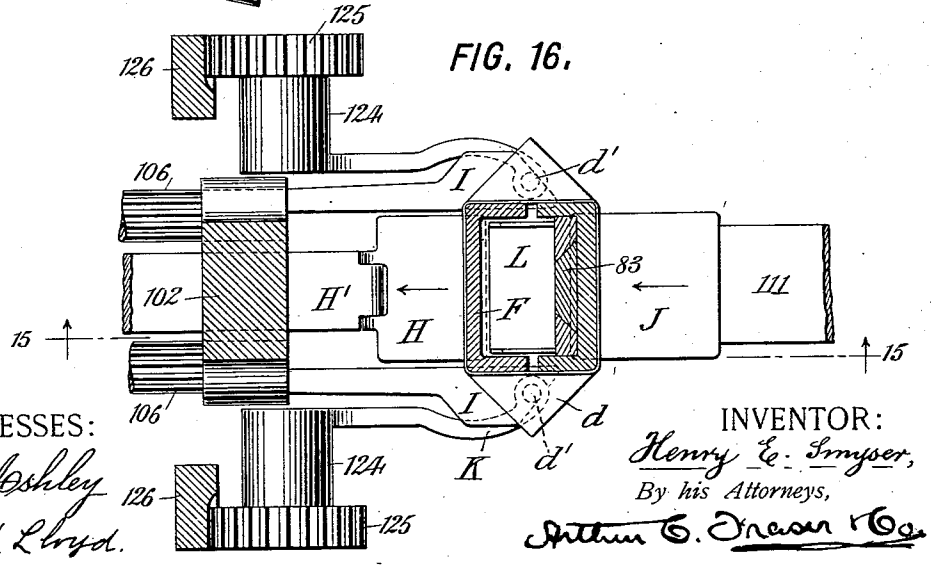

WITNESSES:

C. E. Ashley

H. W. Lloyd.

INVENTOR:

Henry E. Smyser,

By his Attorneys,

Arthur G. Fraser & Co.

THE NORRIS PETERS CO., PHOTO-LITHO., WASHINGTON, D. C.

(No Model.) 27 Sheets—Sheet 12.

H. E. SMYSER.

BAG MAKING AND PACKAGING MACHINE.

No. 564,722. Patented July 28, 1896.

FIG. 17.

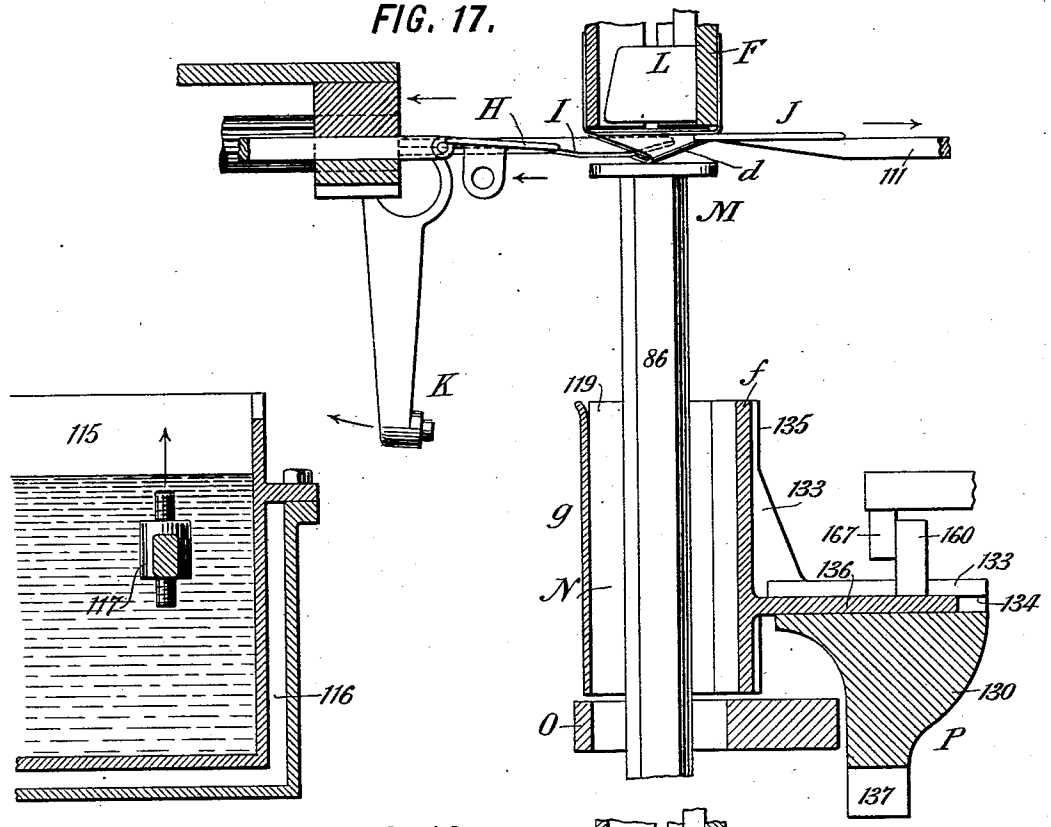

FIG. 18.

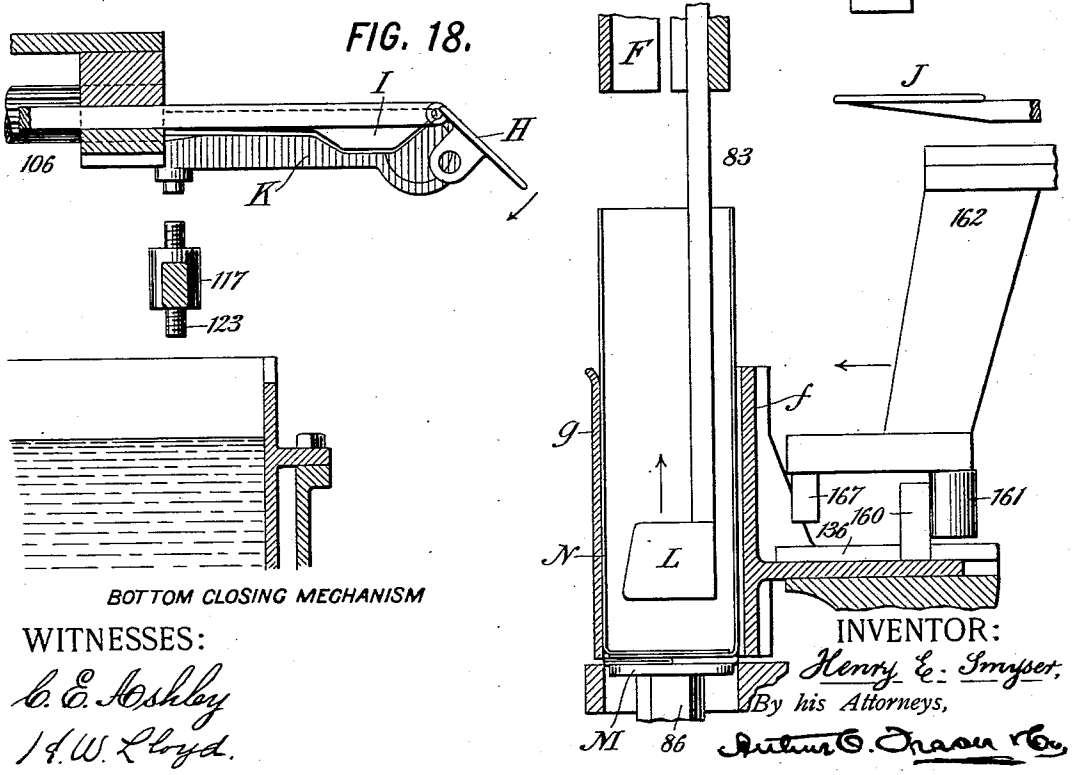

BOTTOM CLOSING MECHANISM

WITNESSES:

C. E. Ashley

J. W. Lloyd.

INVENTOR:

Henry E. Smyser,

By his Attorneys,

Arthur G. Dana & Co.

THE NORRIS PETERS CO., PHOTO-LITHO., WASHINGTON, D. C.

(No Model.) 27 Sheets—Sheet 13.

H. E. SMYSER.

BAG MAKING AND PACKAGING MACHINE.

No. 564,722. Patented July 28, 1896.

FIG. 19.

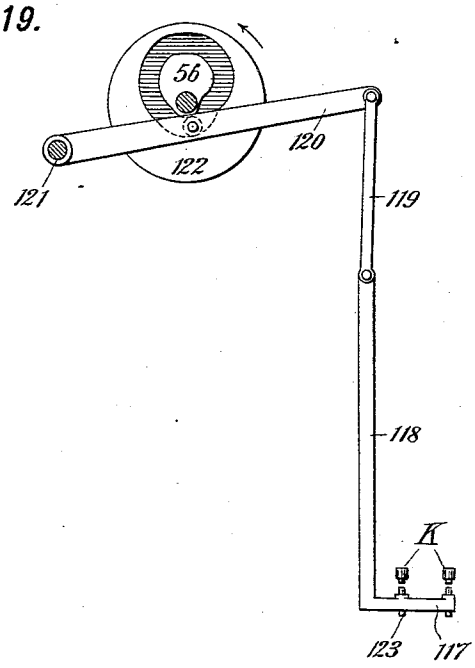

FIG. 23b.

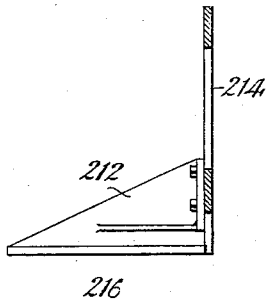

FIG. 23c.

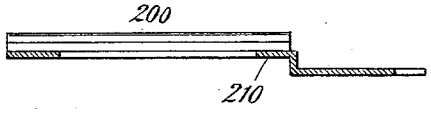

FIG. 20.

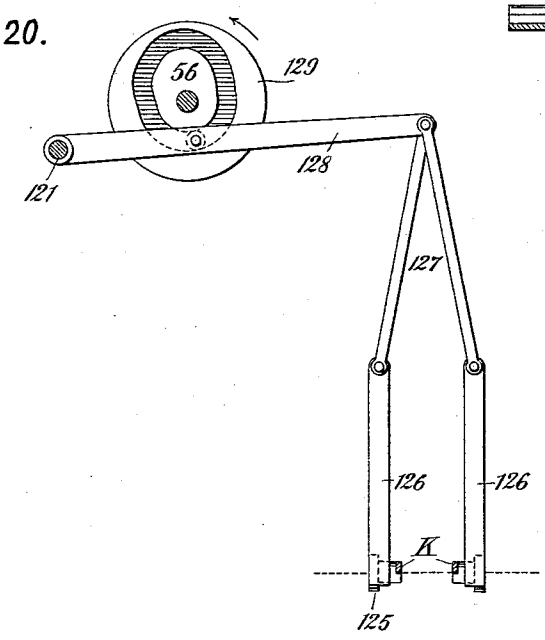

FIG. 20a.

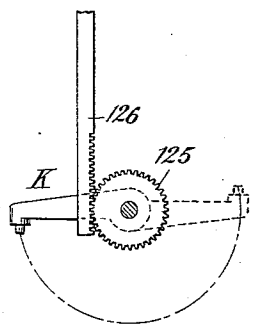

BOTTOM GUMMING MECHANISM

WITNESSES:

C. E. Ashley

H. W. Lloyd.

INVENTOR:

Henry E. Smyser,

By his Attorneys,

Arthur G. Fraser & Co.

THE NORRIS PETERS CO., PHOTO-LITHO., WASHINGTON, D. C.

(No Model.) 27 Sheets—Sheet 14.

H. E. SMYSER.

BAG MAKING AND PACKAGING MACHINE.

No. 564,722. Patented July 28, 1896.

FIG. 21.

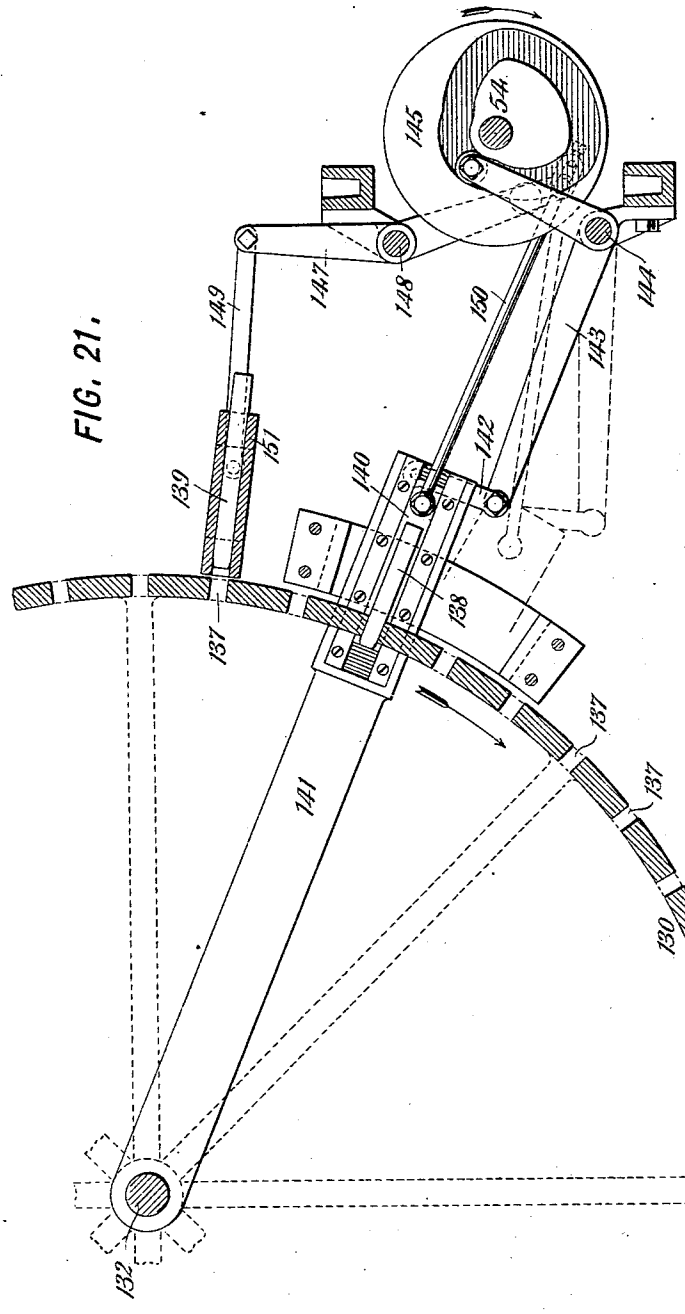

FIG. 21a.

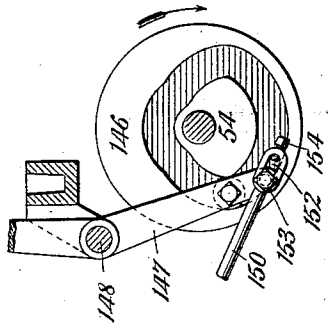

POCKET FEED

WITNESSES:

C. E. Ashley

H. W. Lloyd

INVENTOR:

Henry E. Smyser,

By his Attorneys,

Arthur C. Fraser & Co.

THE NORRIS PETERS CO., PHOTO-LITHO., WASHINGTON, D. C.

(No Model.) 27 Sheets—Sheet 15.

H. E. SMYSER.

BAG MAKING AND PACKAGING MACHINE.

No. 564,722. Patented July 28, 1896.

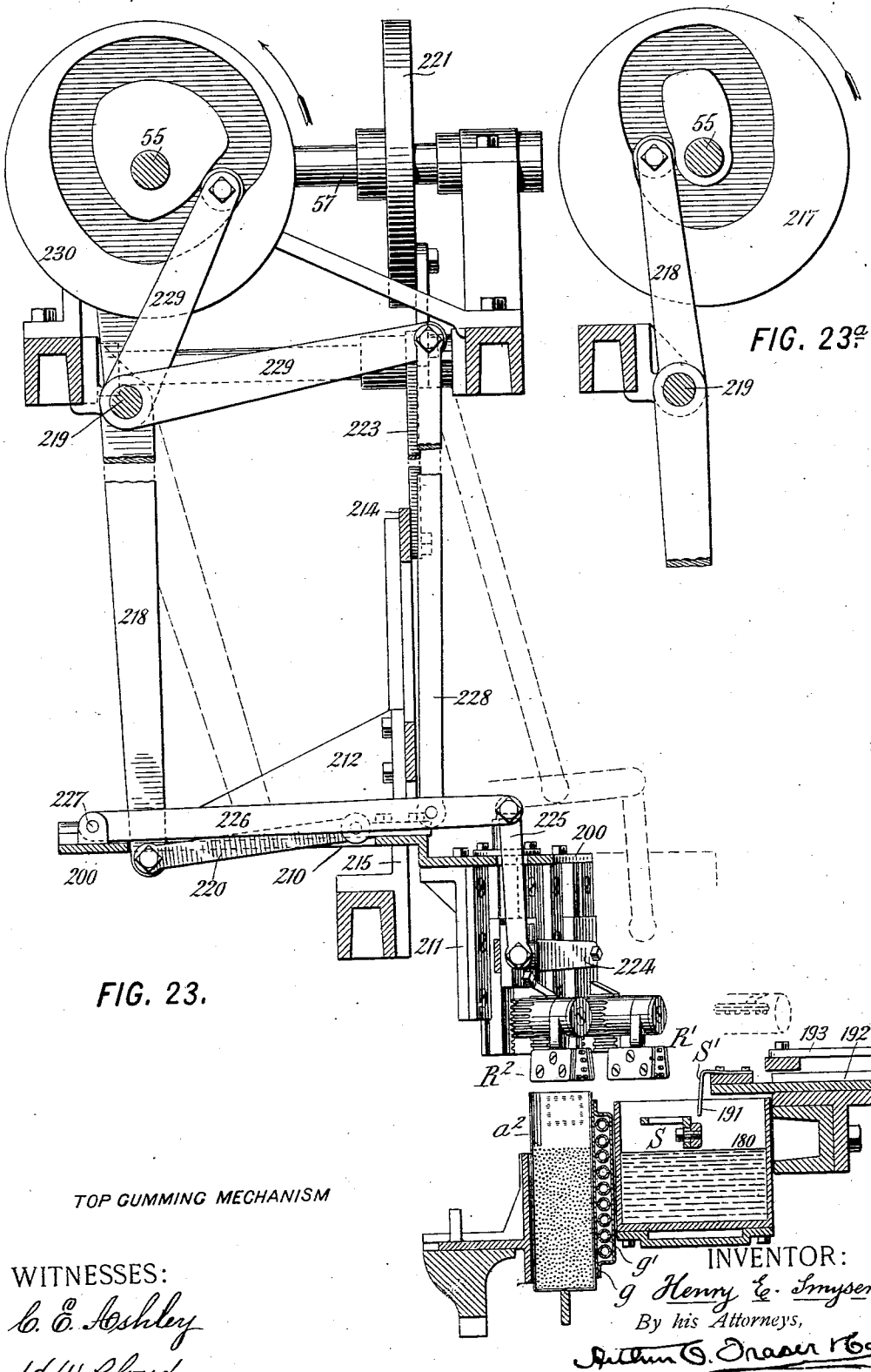

FIG. 23.

FIG. 23ª.

TOP GUMMING MECHANISM

WITNESSES:
C. E. Ashley
H. W. Lloyd.

INVENTOR:
Henry E. Smyser,
By his Attorneys,
Arthur G. Fraser & Co.

THE NORRIS PETERS CO., PHOTO-LITHO., WASHINGTON, D. C.

(No Model.) 27 Sheets—Sheet 16.

H. E. SMYSER.

BAG MAKING AND PACKAGING MACHINE.

No. 564,722. Patented July 28, 1896.

FIG. 24.

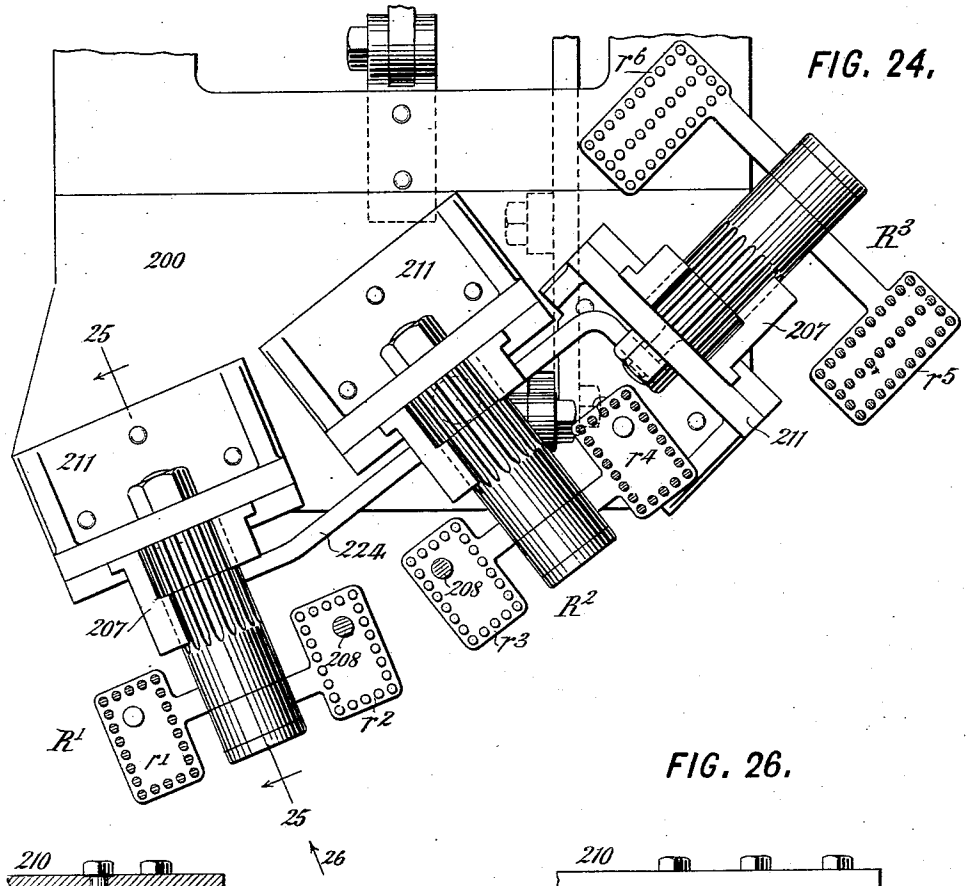

FIG. 26.

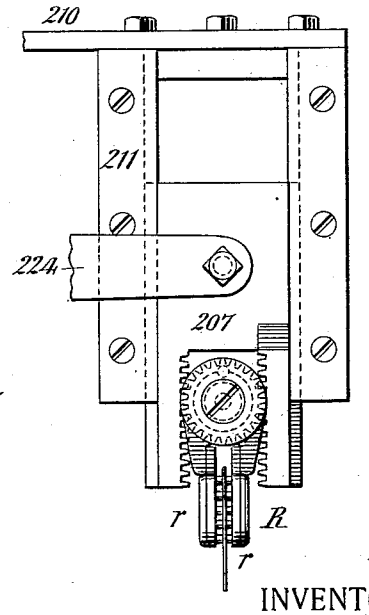

FIG. 25.

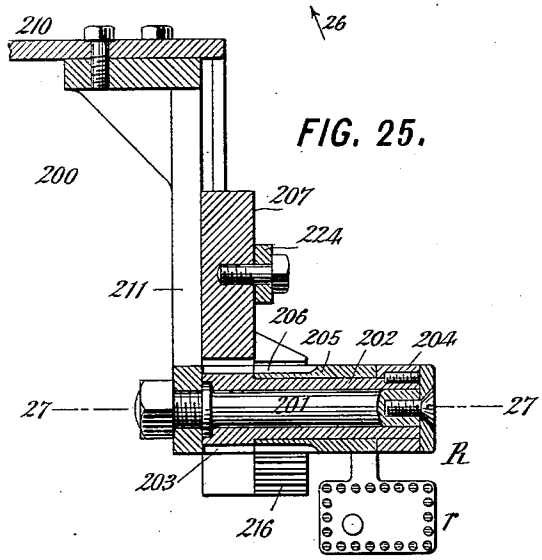

WITNESSES:

C. E. Ashley

J. W. Lloyd.

TOP GUMMING MECHANISM

INVENTOR:

Henry E. Smyser,

By his Attorneys,

Arthur G. Fraser & Co.

THE NORRIS PETERS CO., PHOTO-LITHO., WASHINGTON, D. C.

(No Model.) 27 Sheets—Sheet 17.

H. E. SMYSER.

BAG MAKING AND PACKAGING MACHINE.

No. 564,722. Patented July 28, 1896.

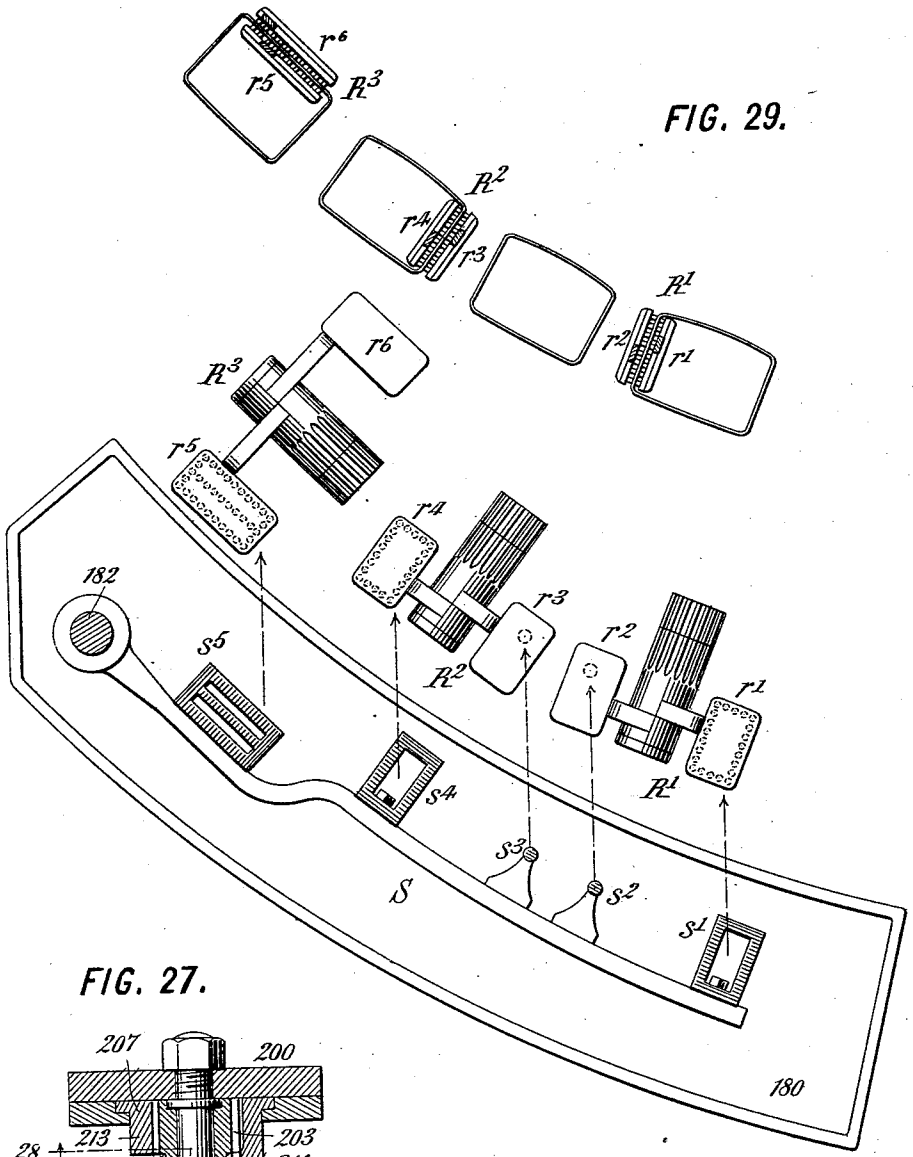

FIG. 29.

FIG. 27.

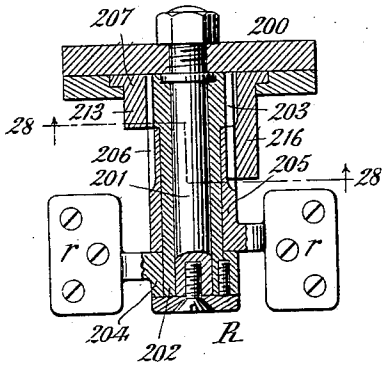

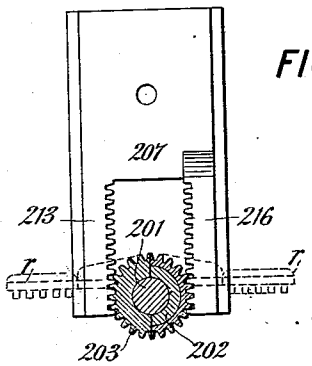

TOP CUMMING MECHANISM

FIG. 28.

WITNESSES:
C. E. Ashley
H. W. Lloyd.

INVENTOR:
Henry E. Smyser,
By his Attorneys,
Arthur G. Fraser & Co.

THE NORRIS PETERS CO., PHOTO-LITHO., WASHINGTON, D. C.

(No Model.) 27 Sheets—Sheet 18.

H. E. SMYSER.

BAG MAKING AND PACKAGING MACHINE.

No. 564,722. Patented July 28, 1896.

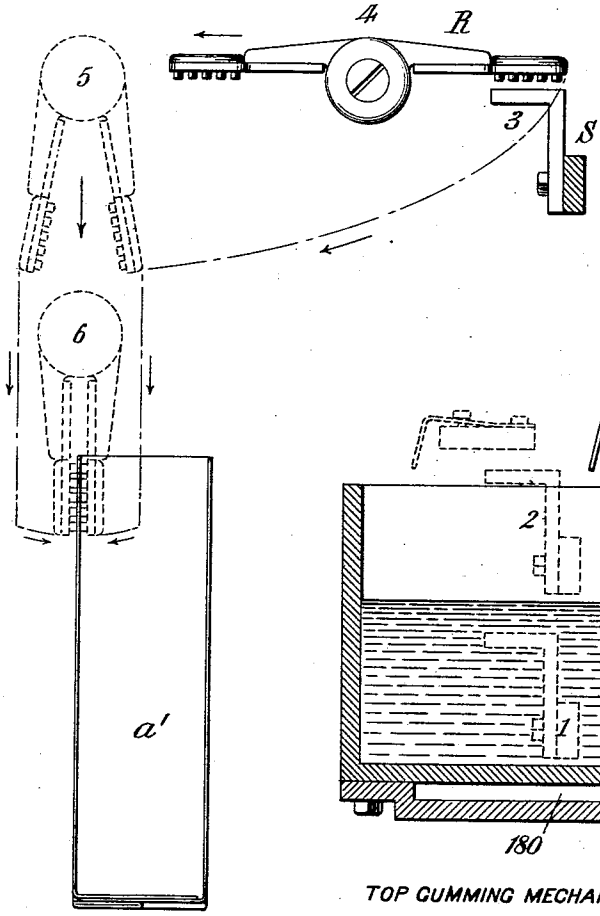

FIG. 30.

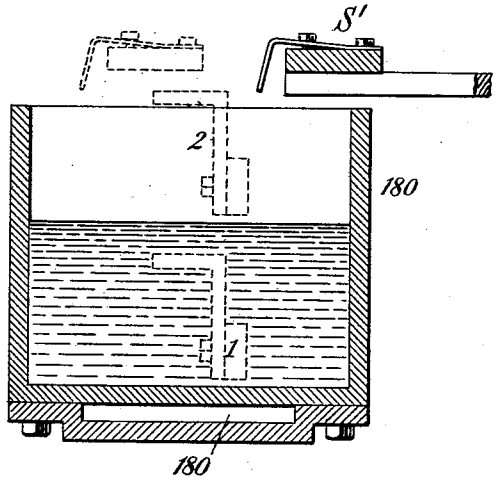

TOP GUMMING MECHANISM

FIG. 53.

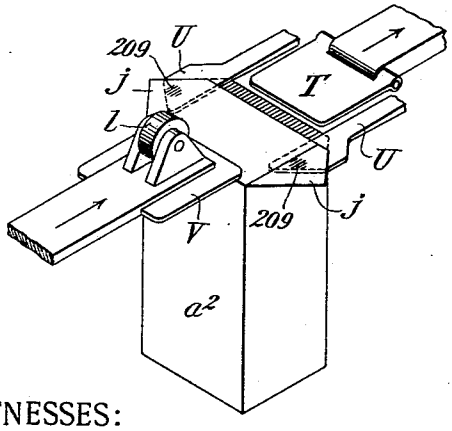

FIG. 54.

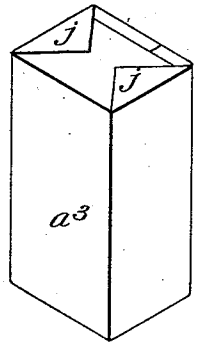

WITNESSES:

C. E. Ashley

H. W. Lloyd.

INVENTOR:

Henry E. Smyser,

By his Attorneys,

Arthur G. Fraser & Co.

THE NORRIS PETERS CO., PHOTO-LITHO., WASHINGTON, D. C.

(No Model.) 27 Sheets—Sheet 19.

H. E. SMYSER.

BAG MAKING AND PACKAGING MACHINE.

No. 564,722. Patented July 28, 1896.

FIG. 45.

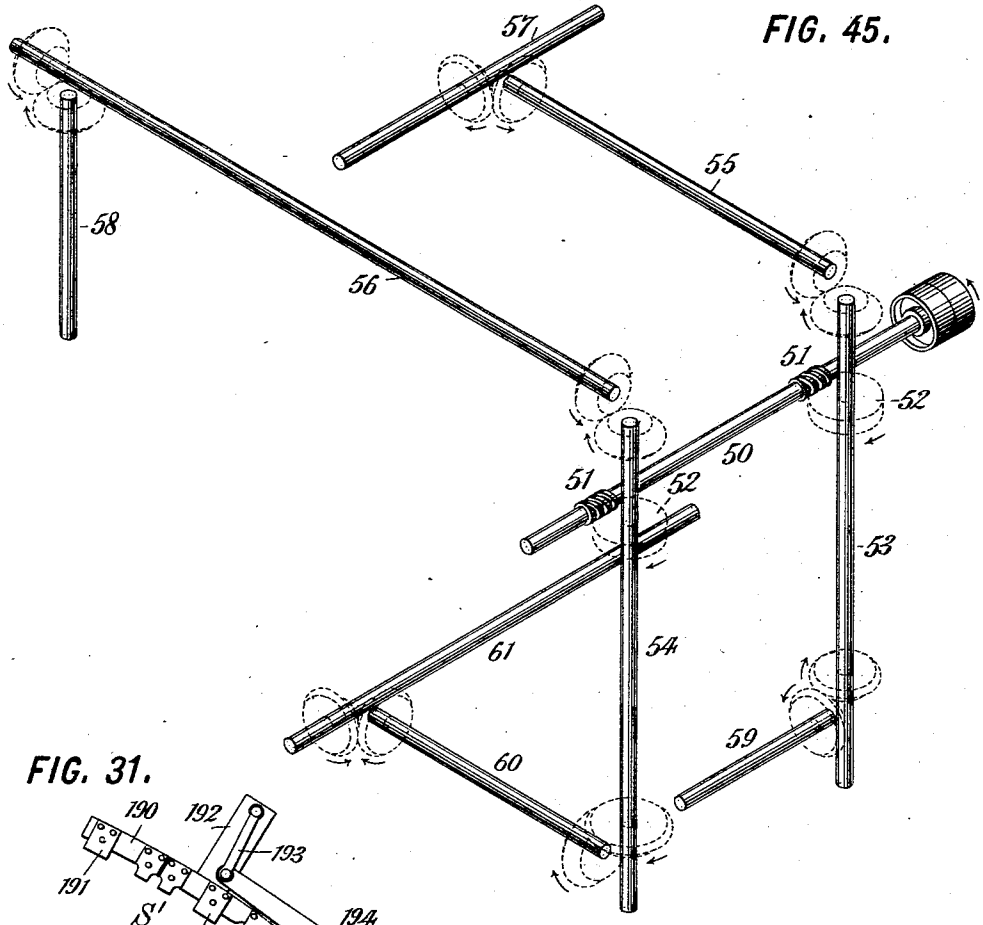

FIG. 31.

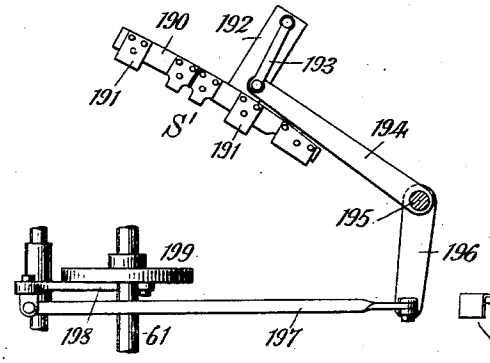

FIG. 32.

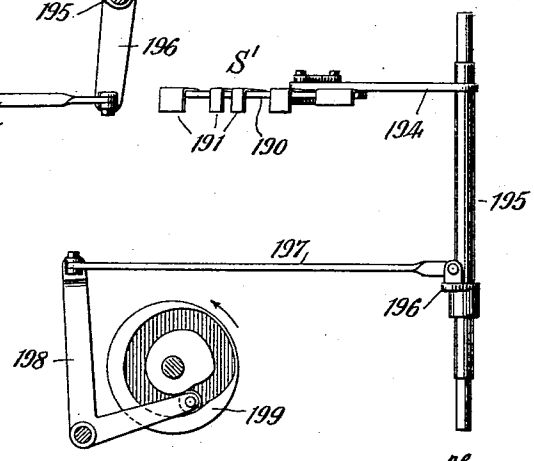

TOP GUMMING MECHANISM

WITNESSES:

C. E. Ashley

H. W. Lloyd.

INVENTOR:

Henry E. Smyser,

By his Attorneys,

Dietrich & Fraser & Co.

THE NORRIS PETERS CO. PHOTO-LITHO WASHINGTON, D. C.

(No Model.) 27 Sheets—Sheet 20.

H. E. SMYSER.

BAG MAKING AND PACKAGING MACHINE.

No. 564,722. Patented July 28, 1896.

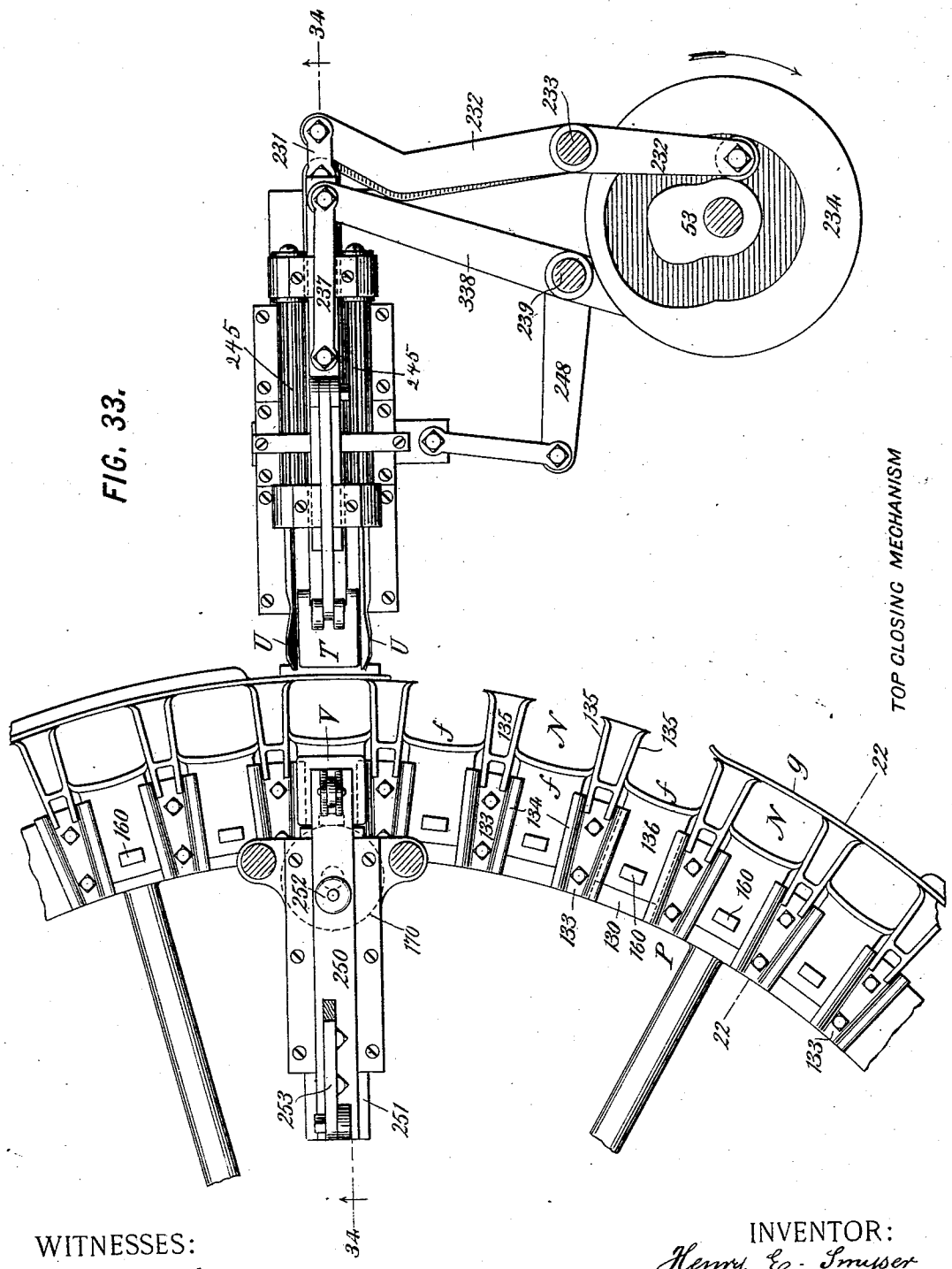

FIG. 33.

TOP CLOSING MECHANISM

WITNESSES:

C. E. Ashley

H. W. Lloyd

INVENTOR:

Henry E. Smyser,

By his Attorneys,

Arthur O. Fraser & Co.

THE NORRIS PETERS CO., PHOTO-LITHO., WASHINGTON, D. C.

(No Model.) 27 Sheets—Sheet 21.

H. E. SMYSER.

BAG MAKING AND PACKAGING MACHINE.

No. 564,722. Patented July 28, 1896.

FIG. 34.

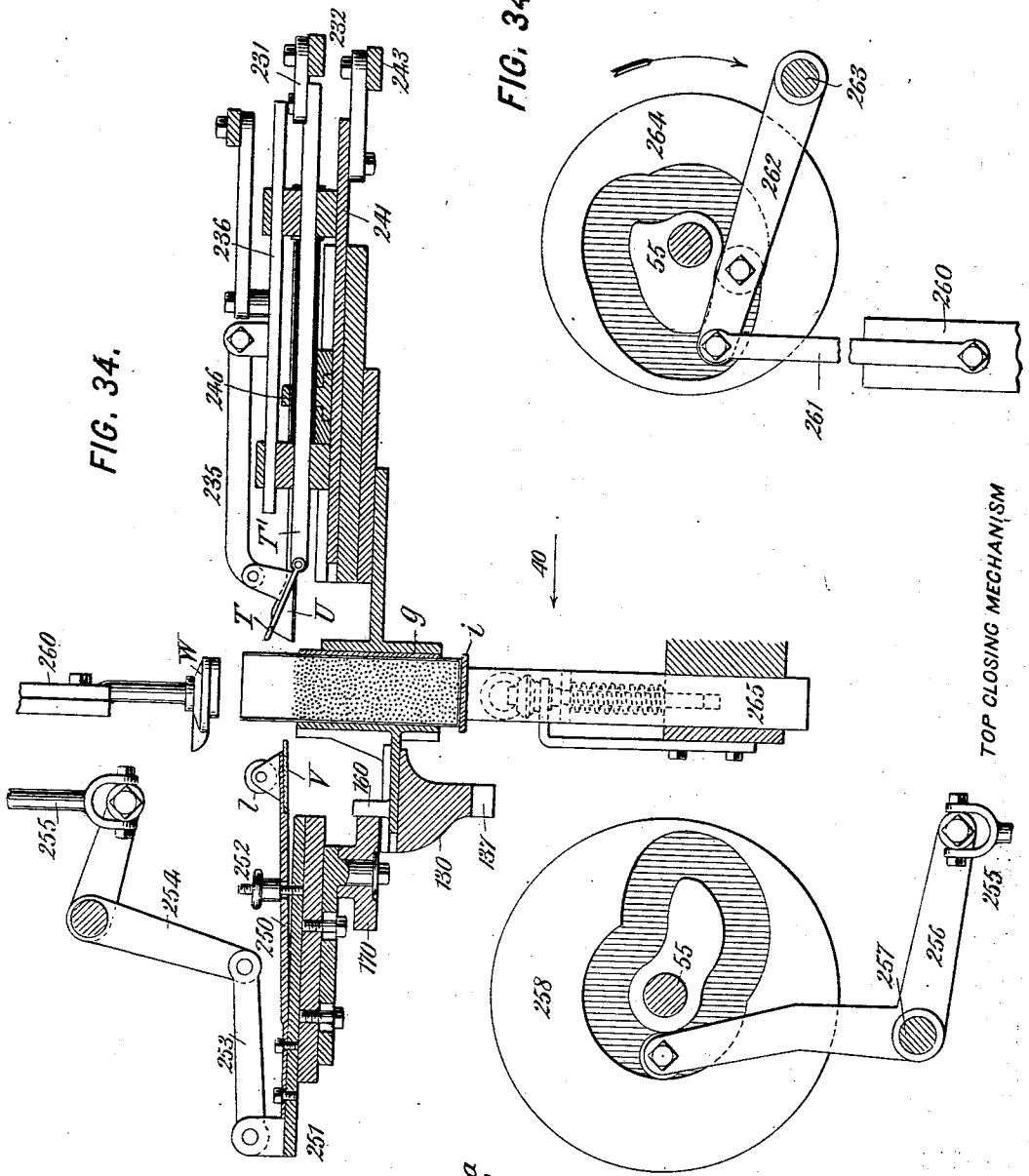

FIG. 34b.

FIG. 34a.

WITNESSES:

C. E. Ashley

H. W. Lloyd.

INVENTOR:

Henry E. Smyser.

By his Attorneys,

Arthur G. Fraser & Co.

THE NORRIS PETERS CO., PHOTO-LITHO., WASHINGTON, D. C.

(No Model.) 27 Sheets—Sheet 22.

H. E. SMYSER.

BAG MAKING AND PACKAGING MACHINE.

No. 564,722. Patented July 28, 1896.

FIG. 35.

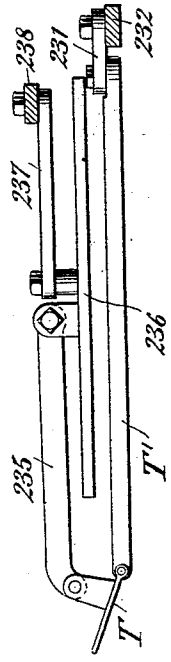

FIG. 36.

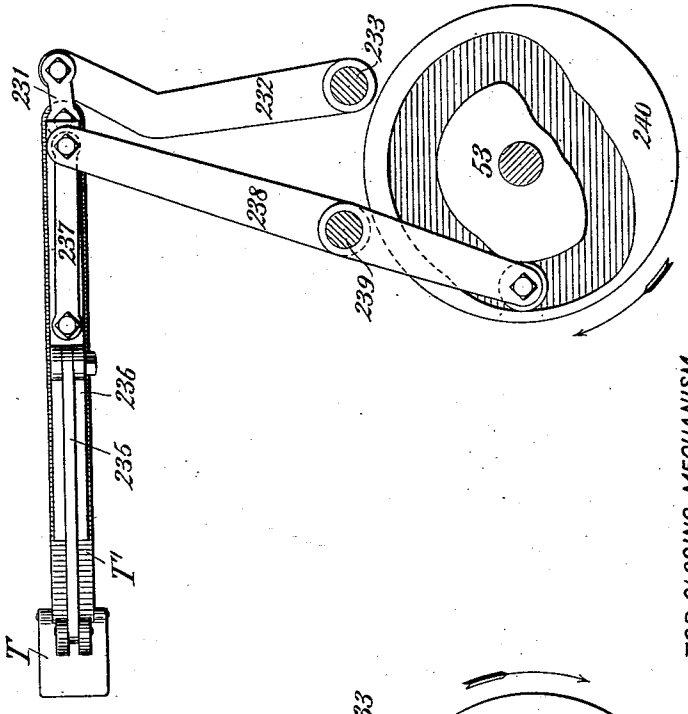

TOP CLOSING MECHANISM

FIG. 37.

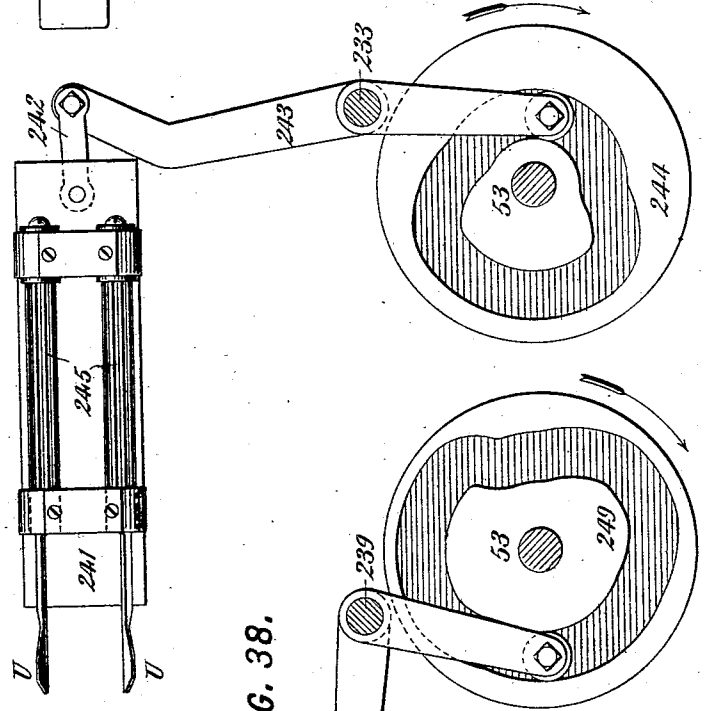

FIG. 38.

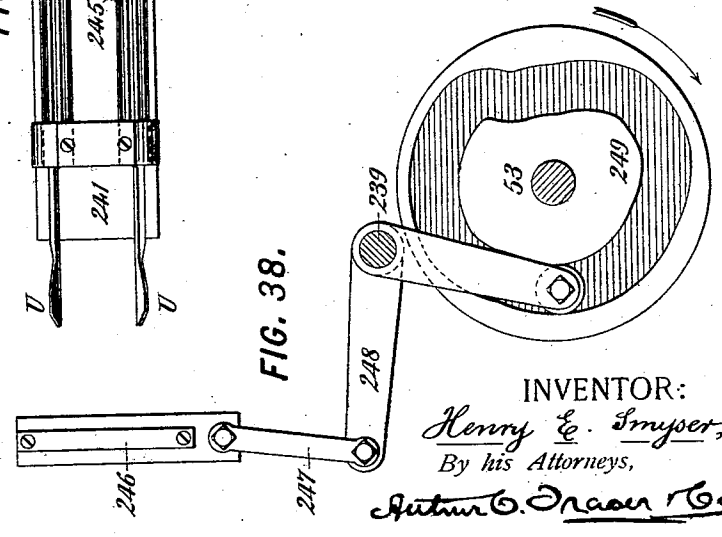

FIG. 39.

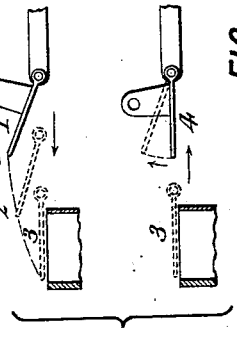

WITNESSES:

C. E. Ashley

H. W. Lloyd.

INVENTOR:

Henry E. Smyser,

By his Attorneys,

Arthur O. Dragoo & Co.

THE NORRIS PETERS CO., PHOTO-LITHO., WASHINGTON, D. C.

(No Model.) 27 Sheets—Sheet 23.

H. E. SMYSER.

BAG MAKING AND PACKAGING MACHINE.

No. 564,722. Patented July 28, 1896.

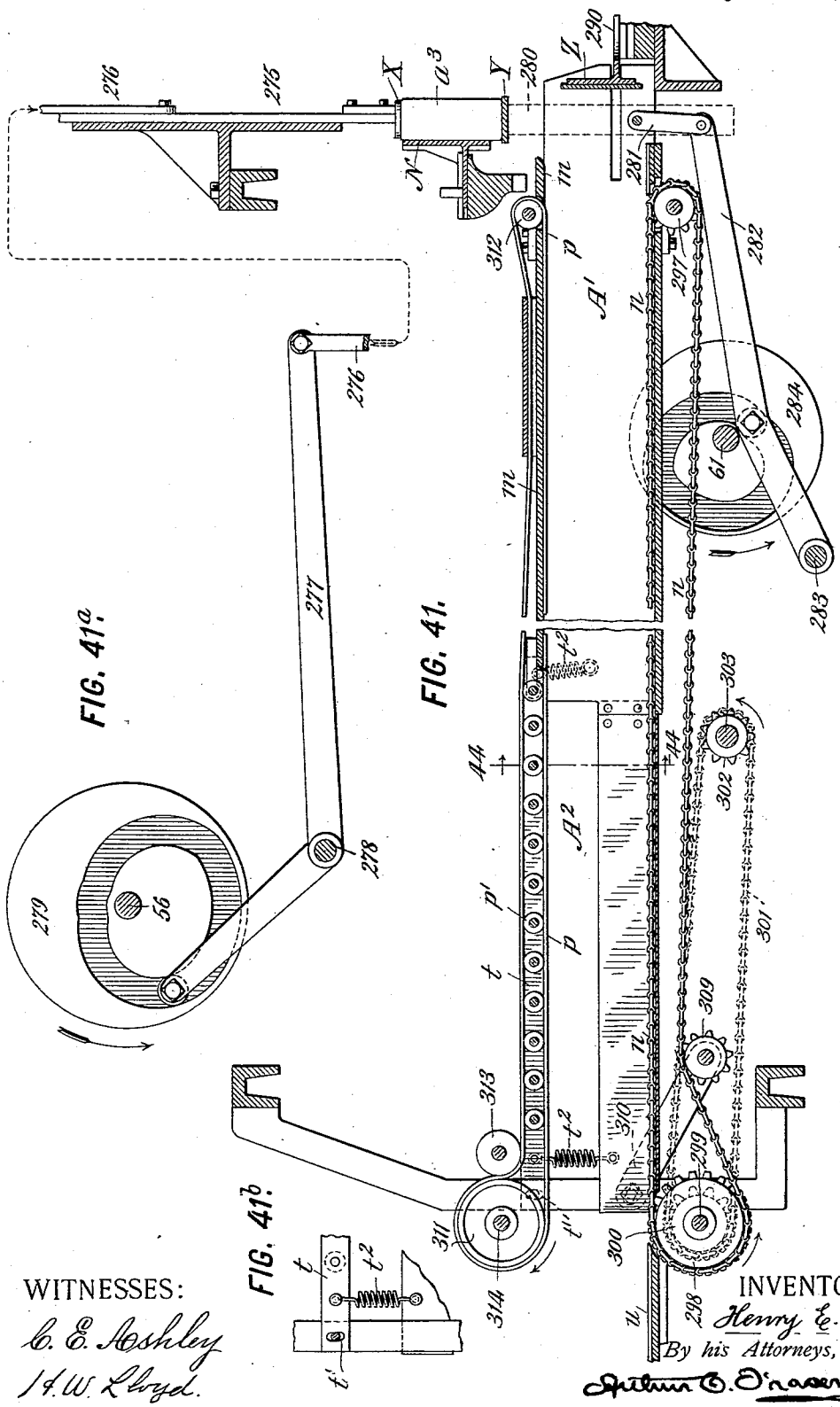

WITNESSES:
C. E. Ashley
H. W. Lloyd.

INVENTOR:
Henry E. Smyser,
By his Attorneys,
Arthur O'Brien & Co

THE NORRIS PETERS CO., PHOTO-LITHO., WASHINGTON, D. C.

(No Model.) 27 Sheets—Sheet 24.

H. E. SMYSER.

BAG MAKING AND PACKAGING MACHINE.

No. 564,722. Patented July 28, 1896.

FIG. 42.

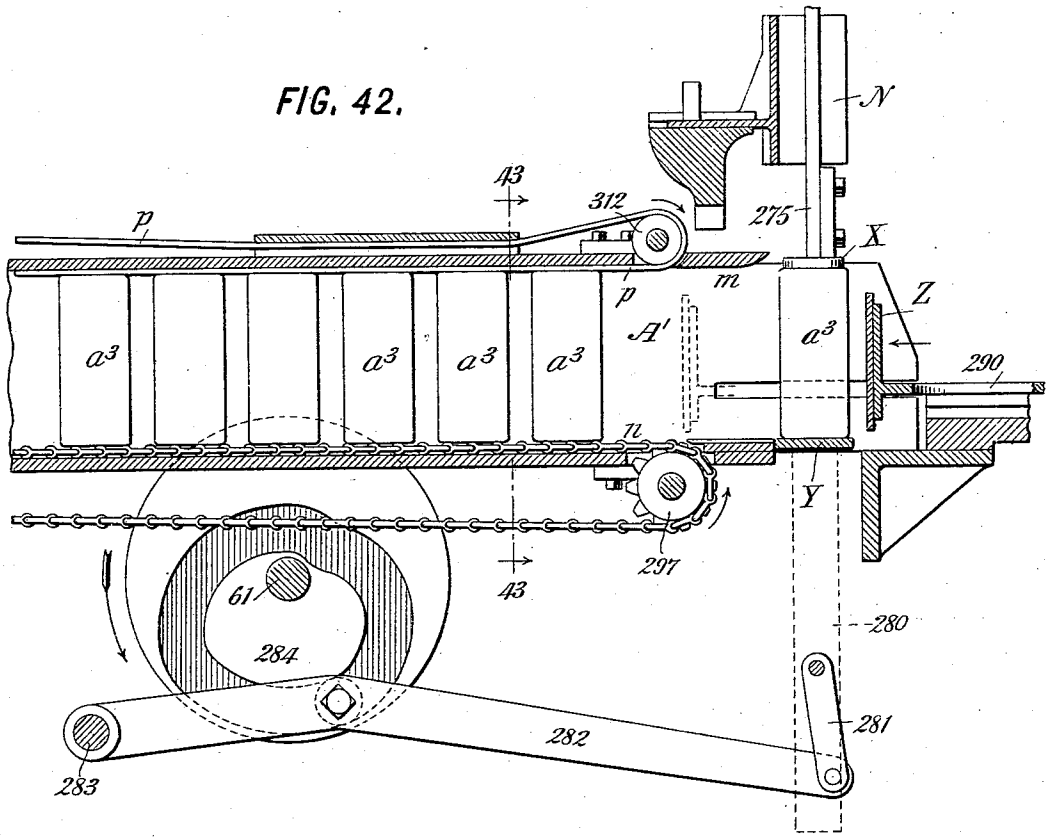

FIG. 44.

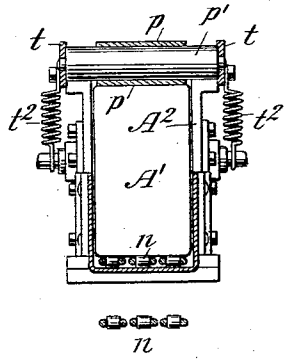

FIG. 43.

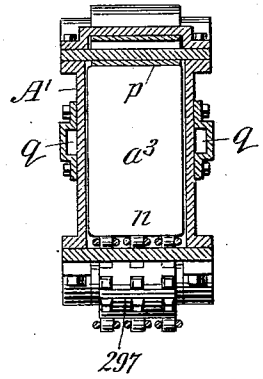

WITNESSES:

C. E. Ashley

H. W. Lloyd.

PACKAGE CONVEYING

INVENTOR:

Henry E. Smyser,

By his Attorneys,

Adam G. Dinsmore & Co.

THE NORRIS PETERS CO., PHOTO-LITHO., WASHINGTON, D. C.

(No Model.) 27 Sheets—Sheet 25.

H. E. SMYSER.

BAG MAKING AND PACKAGING MACHINE.

No. 564,722. Patented July 28, 1896.

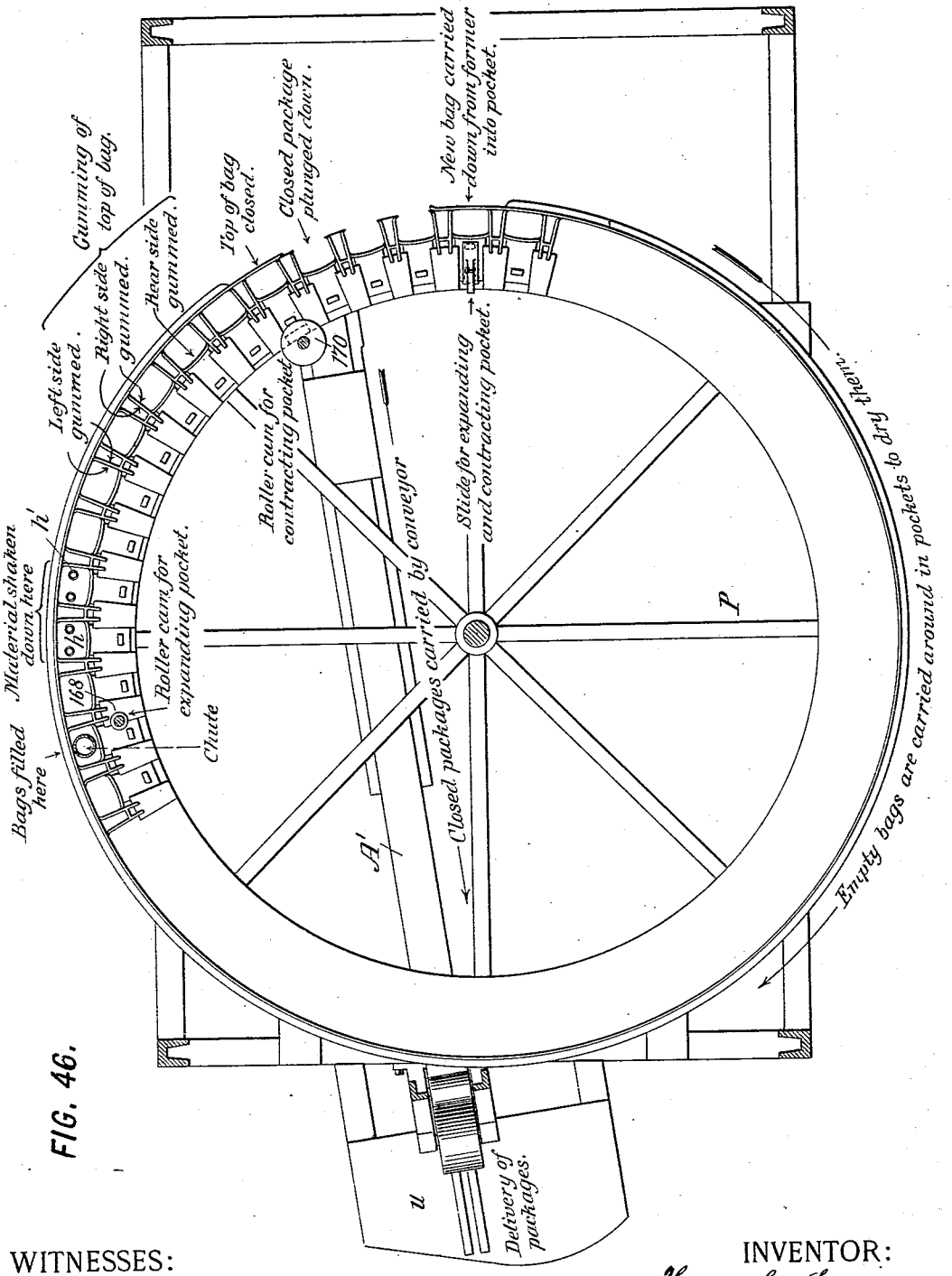

FIG. 46.

WITNESSES:

C. E. Ashley

H. W. Lloyd.

INVENTOR:

Henry E. Smyser,

By his Attorneys,

Arthur G. Fraser & Co.

THE NORRIS PETERS CO., PHOTO-LITHO., WASHINGTON, D. C.

(No Model.) 27 Sheets—Sheet 26.

H. E. SMYSER.

BAG MAKING AND PACKAGING MACHINE.

No. 564,722. Patented July 28, 1896.

FIG. 47.

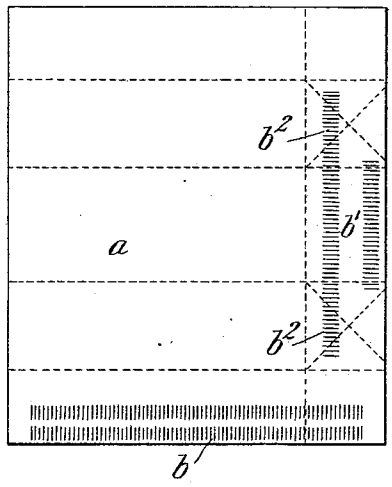

FIG. 52.

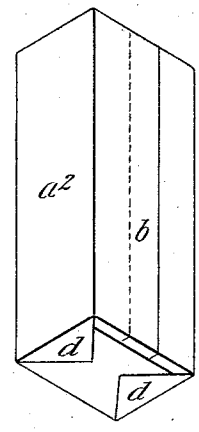

FIG. 48.

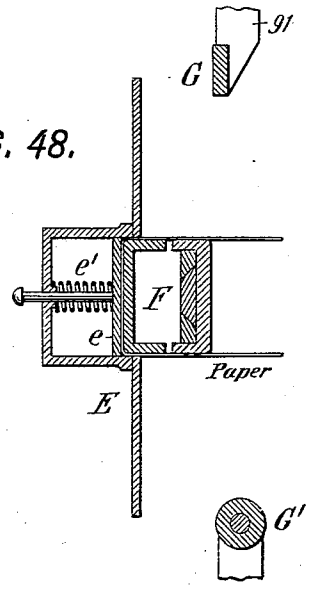

FIG. 49.

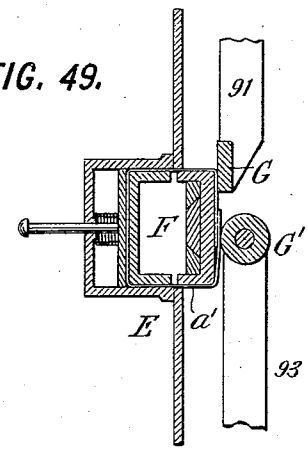

FIG. 50.

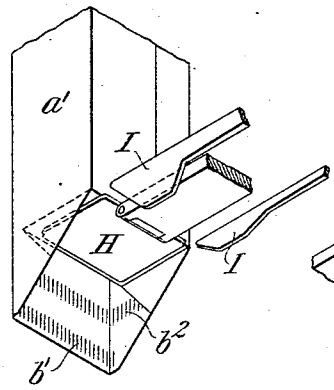

FIG. 51.

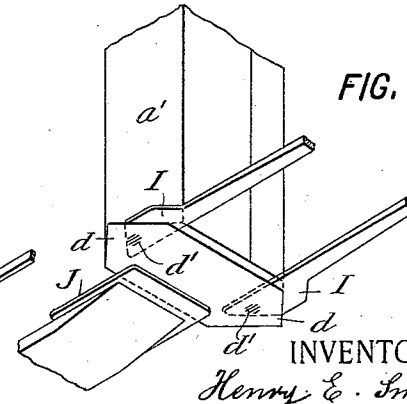

WITNESSES:

C. E. Ashley

H. W. Lloyd.

INVENTOR:

Henry E. Smyser,

By his Attorneys,

Arthur O. Fraser & Co

THE NORRIS PETERS CO., PHOTO-LITHO., WASHINGTON, D. C.

(No Model.) 27 Sheets—Sheet 27.

H. E. SMYSER.

BAG MAKING AND PACKAGING MACHINE.

No. 564,722. Patented July 28, 1896.

FIG. 55.

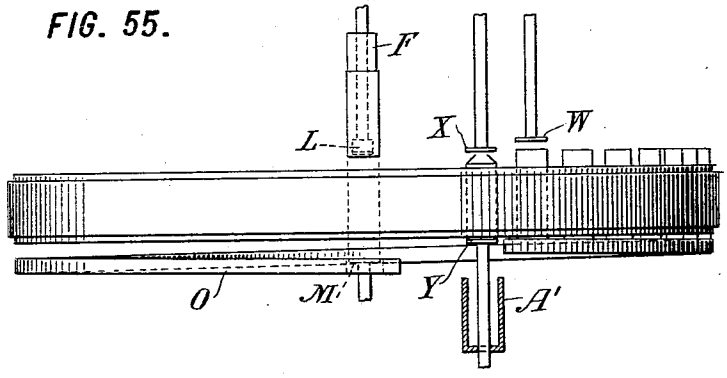

FIG. 56.

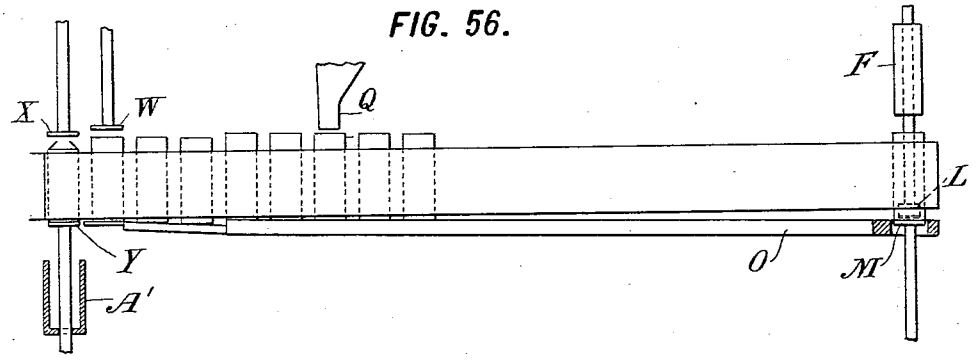

Scale of Figs. 1 to 8, 19, 20, 31, 32, and 46:

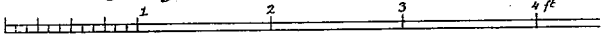

Scale of Figs. 9 to 11, 21, and 41:

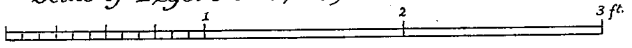

Scale of Figs. 12-13, 22-23, 33-40, and 42-44:

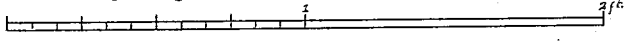

Scale of Figs. 29 and 47:

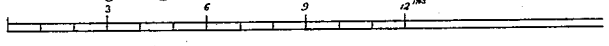

Scale of Figs. 14-18, 24-28, and 30:

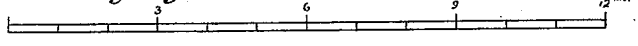

WITNESSES:

C. E. Ashley

H. W. Lloyd.

INVENTOR:

Henry E. Smyser,

By his Attorneys,

Dieterich & Fraser Co.

THE NORRIS PETERS CO., PHOTO-LITHO., WASHINGTON, D. C.

UNITED STATES PATENT OFFICE.

HENRY E. SMYSER, OF PHILADELPHIA, PENNSYLVANIA, ASSIGNOR TO ARBUCKLE BROTHERS, OF NEW YORK, N. Y.

BAG-MAKING AND PACKAGING MACHINE.

SPECIFICATION forming part of Letters Patent No. 564,722, dated July 28, 1896.

Application filed March 4, 1895. Serial No. 540,523. (No model.)

To all whom it may concern:

Be it known that I, HENRY E. SMYSER, a citizen of the United States, residing in Philadelphia, (Germantown,) in the county of Philadelphia and State of Pennsylvania, have invented certain new and useful Improvements in Bag-Making and Packaging Machines, of which the following is a specification.

This invention relates to machines for making bags or receptacles, automatically filling them with a weighed or measured charge of material, and closing or sealing them to form a completed package. Machines of this character have been already disclosed in my following patents: No. 227,185, dated May 4, 1880; No. 449,275, dated March 31, 1891; No. 492,374, dated February 21, 1893; No. 505,857, dated October 3, 1893; No. 505,888, dated October 3, 1893; No. 544,697, dated August 20, 1895. In the machines covered by my said patents the charge of material to be packaged is weighed or measured by one mechanism, which delivers successive charges at stated intervals into a supply-chute. The open-mouthed bags or receptacles are made by another set of mechanisms. As each one is completed it is filled with a charge of the material. The top of the package is then folded down to make a sealed package by another set of mechanisms. In my said machines the open-mouthed bag is immediately on its completion filled with the charge of material and its top then almost immediately closed. This system has been successfully employed for packaging unground coffee, and is applicable to numerous other materials; but for sugar, salt, and other hygroscopic materials it is inadmissible by reason of the moisture that is imparted to the bags by the application of the paste or other adhesive material thereto, which moisture affects the hygroscopic material being packed, causing a partial dissolving and consequent caking of the outer portions thereof most nearly adjacent to the pasted seams. One object of my present invention is to overcome this disadvantage and provide a packaging-machine applicable for the automatic packing of sugar and other hygroscopic substances.

Another object of my invention is to adapt the machine to the use of glue instead of paste as the cementing material for closing the mouth of the bag as well as for cementing other parts thereof.

My invention also introduces numerous other improvements applicable generally to packing or packaging machines.

The preferred embodiment of my present invention is illustrated in the accompanying drawings, wherein—

Figure 1 is a front end elevation of the machine. Fig. 2 is an elevation of the right-hand side. Fig. 3 is a rear elevation. Fig. 4 is a longitudinal mid-section taken generally on the line 4 4 in Figs. 1, 3, 5, and 6. Fig. 5 is a sectional plan cut on the line 5 5 in Figs. 1, 2, 3, and 4. Fig. 6 is a sectional plan cut on a lower plane, as indicated by the dotted lines 6 6 in Figs. 1, 2, 3, and 4. Fig. 7 is a sectional elevation looking from the front and in section cut in the planes indicated by the lines 7 7 in Figs. 4, 5, and 6. Fig. 7^a shows a cam, lever, and link which are more or less concealed in Fig. 7. Fig. 8 is a plan of the pasting mechanism and adjacent parts separated from the rest of the machine. Fig. 9 is a vertical section of the pasting mechanism alone cut on the line 9 9 in Fig. 8. Fig. 10 is a similar section showing the parts in a different position. Fig. 11, Sheet 1, is a transverse section on the line 11 in Fig. 4 or 11 11 in Fig. 5. Fig. 12 is a fragmentary vertical longitudinal section viewed from the left, showing the mechanism for closing and gumming the bottom of the bag, the plane of the section being substantially the same as that of Fig. 4. Fig. 12^a shows a cam which is hidden in Fig. 12. Fig. 13 is a vertical transverse section looking from the rear cut on the line 13 13 in Fig. 12 and showing part of the bottom-closing mechanism. Figs. 14 to 18, inclusive, are enlarged fragmentary views showing the bottom-closing mechanism in different positions, Figs. 14, 15, 15^a, and 15^b being vertical longitudinal sections viewed from the right-hand side of the machine and cut approximately on the line 15 15 in Fig. 16, Fig. 16 being a horizontal section and Figs. 17 and 18 being more complete sections in the same plane as Figs. 15 to 15^b and in substantially the same plane as Fig. 12, although looking

in the contrary direction. Figs. 19 and 20 are front elevations of the bottom-gumming mechanisms detached, and Fig. 20ª a side elevation of part thereof. Fig. 21 is a fragmentary horizontal section taken in a slightly lower plane than Fig. 6. Fig. 21ª shows a cam which is concealed in Fig. 21. Fig. 22, Sheet 9, is a vertical radial cross-section through the bag-carrier between two pockets, as denoted by the line 22 22, Fig. 33. Fig. 23 is a sectional elevation of the mechanism for gumming or gluing the top of the bag viewed from the front of the machine and cut approximately in the plane of the lines 23 23 in Figs. 5 and 2. Fig. 23ª shows a cam hidden in Fig. 23. Figs. 23ᵇ and 23ᶜ are sectional elevations of two slides shown in Fig. 23. Fig. 24 is an inverted plan or under side view of the three dabbers or glue-fingers for applying glue to the top or mouth of the bag. Fig. 25 is a vertical section through one of these dabbers, taken on the line 25 25 in Fig. 24. Fig. 26 is an oblique elevation, being a front view of the dabber shown in Fig. 25, the view looking in the direction of the arrow 26 in Fig. 24. Fig. 27 is a horizontal section on the line 27 27 in Fig. 25, the dabber, however, being in different position with its wings extended. Fig. 28 is a sectional elevation answering to Fig. 26, showing the sliding rack in elevation and the two dabber-pinions in section in the planes of the line 28 28 in Fig. 27. Fig. 29 is an illustrative plan of the top-gumming mechanism, the parts being somewhat rearranged to show the respective positions and successive movements of the dabbers. Fig. 30 is an illustrative sectional elevation of the top-gumming mechanism, showing the glue-vessel in section and the successive positions of the plunger, scraper, and dabbers in full and dotted lines. Fig. 31 is a plan, and Fig. 32 is an elevation looking from the front, of the scrapers and their operating mechanism. Fig. 33 is a sectional plan of the mechanism for folding in or closing the top of the bag, showing incidentally in plan a portion of the bag-carrier. Fig. 34 is a vertical section of the top-closing mechanism, taken on the line 34 34 in Fig. 33. Figs. 34ª and 34ᵇ show cams and levers for operating portions of the top-closing mechanism. Fig. 35 is a fragmentary side elevation showing part of the top-closing mechanism. Fig. 36 is a plan of Fig. 35 with part of the operating mechanism. Fig. 37 is a plan of another portion of the top-closing mechanism. Fig. 38 is a further fragmentary plan of this mechanism. Fig. 39 is a diagrammatic view showing the successive movements of the first folding-blade of the top-closing mechanism. Fig. 40 is a fragmentary sectional front elevation of part of the top-closing mechanism viewed in the direction of the arrow 40 in Fig. 34. Fig. 41 is an oblique longitudinal section in the plane of the line 41 41 in Fig. 6, showing the mechanism for lowering the completed package and for drying it and conveying it out of the machine. Fig. 41ª is a fragmentary elevation viewed nearly at right angles to Fig. 41, showing the cam mechanism for operating one of the plungers. Fig. 42 shows, on a larger scale, the right-hand portion of Fig. 41 with the parts in a different position. Fig. 43 is a cross-section of the package-conveying conduit on the line 43 43 in Fig. 42. Fig. 44 is a cross-section thereof on the line 44 44 in Fig. 41. Fig. 45 is a perspective view of the several shafts and gears of the machine isolated from the remaining parts. Fig. 46 is a diagrammatic plan view illustrating the course of the bags and packages through the machine and indicates the positions where the several operations are performed upon them. Fig. 47 shows the pasted sheet of paper from which the bag is made. Figs. 48 and 49 are horizontal sections through the former and folders, showing the operation of folding the paper around the former. Fig. 50 is a perspective view illustrating the first step in the folding in of the bottom of the bag. Fig. 51 is a similar perspective view showing a later stage in the folding of the bottom. Fig. 52 is a perspective view showing the open-mouthed bag completed. Fig. 53 is a perspective view showing the folding in of the top, and Fig. 54 is a perspective view of the closed package. Fig. 55 is an illustrative front elevation, and Fig. 56 is a development of the circularly-arranged pockets and table in a straight line.

I will first describe the operations performed in making the bag and in filling and completing the package with reference to the parts of the machine which immediately act upon the bag or package and independently of the mechanisms for operating these parts, which mechanisms I will describe later.

Referring to Fig. 47, *a* is a sheet of paper to which paste is applied at *b b'*, and which is destined to be folded on the dotted lines. The paste applied at *b'* is extended beyond the width of the bag at b^2 b^2. A pile of sheets of paper is placed on a table A, Fig. 5, and the sheets are one at a time pasted and lifted off from this pile by means of pasting-lifters B B. These lifters revolve intermittently around a vertical shaft B', and have descending and ascending movements between their intermittent rotative movements. The lifter descends against a plate C, which is coated with paste, and the projecting portions of the face of the lifter (corresponding to the pasted portions *b b'* in Fig. 47) take paste therefrom. The lifter then rises, swings rotatively over the table A, and descends upon the pile of paper, applying the paste to the uppermost sheet *a*, and then reascends, lifting this sheet with it by means of the paste. It then rotates and descends upon a table D, against which it presses the paper to transfer the paste effectively thereto. It then reascends and again rotates until it stands over a tilting table or matrix E, and descends upon it, this table standing hori-

zontally at this time, (see Fig. 8,) thereby laying the sheet of paper flat on this table. A stripper *c*, Figs. 4 and 7, descends and holds the paper against the table while the lifter B rises, so that the paper is disengaged from the lifter, and the latter then rotates to again come over the paste-plate C. The stripper *c* rises, leaving the sheet of paper lying on the table E. This table then tilts (see Fig. 4) until it stands vertically and at the same times moves forward, bringing the sheet of paper against an upright tubular former F. The yielding middle section *e* of the table holds the paper clamped against the former, while by the continued advance of the table the sides of the sheet are turned up against the sides of the former, as shown in Fig. 48. During this movement the middle section *e* remains stationary, the movement being taken up by the compression of its springs *e'*. The table stops in the position shown in Fig. 49, and a folding-blade G, Fig. 48, then advances and turns down one side or flap of the paper, whereupon a folding-roller G' then advances and turns down the other flap of the paper, laying it upon the first and rolling repeatedly over the lap or seam, as shown in Fig. 49, so as to unite the pasted surfaces to form the upright seam of the bag. The tilting table E then moves back, leaving the paper wrapped around the former in the form of a square tube, held by the roller G'. The tube (lettered *a'*) is shown in this condition on the former in Fig. 12.

The bottom of the tube has then to be folded in to form a bag-bottom. The portion of paper required to form the bottom projects beneath the former, as shown in Fig. 12. It is first acted upon by a swinging folder H, hinged to a slide H'. This folder moves in the manner shown in Fig. 14 from the position 1 advancing (see Fig. 15) to position 2, where it has begun to act on the paper, (see Fig. 15[a],) and continuing to advance until it has turned up the first fold forming the bag-bottom and has swung up to approximately a horizontal position, as shown at 3 in Fig. 14, (see also Fig. 15[b],) after which it draws back to position 4 and swings down to position 1 ready for the next operation. This first folding-blade thus turns up the first fold of the bag-bottom, as shown in Fig. 50. Following it in its advance are two wing-folders I I, which enter each side of it immediately after it has reached the position 3. They are shown as entering in Fig. 15[b]. While entering they are turned toward each other, as shown in the end view, Fig. 13. When fully entered, these wing-folders swing outwardly or away from each other, as shown in Fig. 51, thereby drawing down the pasted flap of paper and forming the side flaps into triangular ears or wings *d d*. At the same time another folding blade or plate J advances from the opposite side to the first folding-blade H and lays down the second or pasted flap upon the first flap. After the wing-folders I I have begun to swing outwardly, and while the folding-blade J is advancing, the first folder H moves back from position 3 to 4, Fig. 14, sufficiently in advance of the blade J to avoid being smeared with paste from the pasted flap. While the triangular flaps or wings *d* are held turned out by the wing-folders I I two glue-dabbers K K swing up and apply dots of glue (or paste or other cement) to these flaps in the positions *d d*, Figs. 51 and 16, and then immediately swing back. Thereupon the wing-folders I swing inwardly, turning in the flaps *d d*, the blade J remaining in place to hold the bag-bottom flat and prevent crumpling of the paper until these flaps have been turned beyond the vertical, whereupon the blade J slides back out of engagement with the bag. The wing-folders I I turn the triangular flaps inward to about the extent indicated in Fig. 17 and hold them there until a plunger M, which meanwhile has been ascending, comes in contact with them, as shown in Fig. 17, so as to keep them from flying outwardly again, whereupon the wing-folders I I are retracted, sliding out of the flaps and moving back to the position shown in Fig. 18, after which the folding-blade H swings down from the position 4 to 1, Fig. 14. As soon as the wing-folders have moved out of the way the plunger M completes its ascent, thereby folding up the flaps *d d* flat against the second flap of the bag-bottom and squeezing the bag-bottom tightly against a plunger L, which is within the former F and forms the temporary bottom of the latter. This squeezing of the bag-bottom causes the paste *b'* and the glue applied at *d' d'* to adhere and firmly cement together the flaps of the bag-bottom, thereby completing the open-mouthed bag, as shown in Fig. 52. The roller G', which has held the upright seam until this instant, then rolls off the former.

The bag a^2 thus made requires to be removed from the former and forced down into one of a series of carrying-pockets N beneath. To effect this, the plungers L and M move down simultaneously, (as soon as the roller G' has released the bag,) holding the bag-bottom pinched between them, thus drawing the bag from the former and carrying it down into the pocket to the position shown in Fig. 18. The pocket N is then slightly contracted to grasp the bag, and the plunger L then rises out of the bag to its position within the former.

The pockets N N are arranged circularly around an intermittently-revolving wheel or carrier P, which moves step by step to bring each time an empty pocket into position under the former to receive a completed bag. The pockets are made to contract and expand, so as to grasp the bag or release it. In the construction shown this is effected by making the inner or rear wall *f* of each pocket movable. The pockets, which are open-mouthed, move in a circular path over an annular table or ring O, Fig. 6. This table has a hole through

which the plunger M works. As the pockets advance the bags are caused to slide around over this table. The pockets are made with their outer sides open, as shown in Fig. 33, being closed by coming against a stationary wall g, which is or may be made hollow, as shown at g' in Fig. 23, to form a steam or hot-air jacket to warm or heat the outer sides of the bags. This jacket may be made steam-tight, or it may have steam-pipes carried through it, the latter construction being shown in Fig. 23. By means of this steam jacket or drier the longitudinal pasted seams b of the bags, which, being turned against the open outer sides of the pockets, come against this heated wall, are dried. For also drying the pasted or glued seams in the bottoms of the bags the table O is provided for a part of its circumference with a steam or hot-air jacket O'. (Shown in dotted lines in Fig. 6 and in section in Fig. 22.) To give ample time for the thorough drying of the pasted seams in the sides and bottoms of the bags, the bags are carried for a considerable time in the pockets before being filled. In the construction shown, where forty-eight pockets are employed, empty bags in the course of being dried are contained in about thirty-three of the pockets, which in a machine making about twenty-one packages per minute has been found to give ample time for the thorough drying of the bags, each bag being thus afforded about one and one-half minutes for drying.

When the bag reaches the filling position, it is filled with a charge of material, which is dumped into it through a hopper and chute Q, Figs. 2 and 5. The pocket supports the bag against the bursting strain due to the sudden flow of the material into it.

Each bag after being filled as it reaches the position over pins h h' has its contents thoroughly shaken down by the bag being successively lifted and dropped by the pins, which move rapidly up and down through holes in the table. Before being thus shaken, the bag is released from the grasp of the pocket by the pocket being expanded. Glue (or other adhesive substance) is then applied to the top portions or mouths of the bags in suitable locations adapted to cement the flaps of the top when folded in. Each bag is first gummed on its left side (see Fig. 46) by means of the swinging or folding wings or fingers r' r^2 of a dabber R', which wings take glue from the glue plates or sections s' s^3, respectively, of a glue-plunger S (see Fig. 29) and carry the glue to the bag, applying it in appropriate positions on the outer and inner surfaces of the bag. The wings, which are open when receiving glue from the plunger, close together and embrace the bag between them in the manner shown in Fig. 26. On advancing to a further position the bag is gummed on its right side. (See Fig. 46.) This is done by the wings r^3 r^4 of a dabber R^2, receiving glue from the sections s^3 s^4, respectively, of the glue-plunger S. The wings of this dabber embrace the sides of the bag between them, as shown in the upper part of Fig. 29. On advancing to a further position (see Fig. 46) the bag has its rear side gummed by the wing r^5 of a dabber R^3, which takes glue from the section s^5 of the plunger S. (See Fig. 29.) In applying this glue to the bag, the wings r^5 r^6 of this dabber embrace the bag between them, as shown in the upper part of Fig. 29.

The bag on being carried to a further position (see Fig. 46) has its top closed by mechanism shown in Figs. 33 to 40. In this position the bag rests on a yielding table or plate i, Figs. 6, 34, and 40. On reaching this position the pocket N is slightly contracted, so as to press against the bag. To close the top of the bag, its outer or first flap, which is not gummed, is first folded in and laid down flat upon the mass of material by a folder consisting of a swinging folding-blade T, Figs. 34, 35, and 36, mounted on a slide T', and which executes the movements shown in Fig. 39, advancing from position 1 through position 2 to 3. This combined advancing and swinging-down movement of the blade folds or tucks in the paper without risk of tearing it. Following the blade T, two wing-folders U U, Fig. 37, enter the mouth of the bag by sliding forward each side of the blade T. Having advanced fully into the mouth of the bag, these folders swing outwardly, thereby drawing the right and left sides of the top of the bag into triangular flaps j j, Fig. 53. In so doing the rear or back flap of the bag is drawn down upon the first or front flap in the manner shown in Fig. 53, the first folding-blade T being retracted in time to avoid being smeared with glue from the gummed back flap. In so doing this folder T moves from the position 3 to the position 4 in Fig. 39, from which it subsequently swings up to the position 1 ready for the next operation. As the folding-blade T recedes, a folding-blade V on the opposite side of the bag enters and moves over the back flap, laying it down on the front flap. This folder V is movable vertically to a slight extent and carries a roller l. (See Fig. 34.) When it is thus moved over the top of the bag, a plunger or presser W moves down against the roller l, thereby pressing down the blade V in order to slightly press down and flatten the top of the package. While the blade V remains thus pressed down, the wing-folders U U swing inwardly, carrying the triangular flaps j j inward and breaking or folding the paper against the outer edges of the blade V. Thereupon the blade V is retracted, and when the folders U U have turned in toward each other sufficiently to nearly lay down the triangular flaps upon the top of the bag the plunger W again moves downward, and as soon as it has moved far enough to catch the flaps and prevent them from flying upwardly again by reason of the stiffness of the paper the folders U U are retracted, sliding out of the flaps, and as they pass out of the way the

plunger W, continuing its descent, presses down the flaps upon the top of the package, completing it, as shown in Fig. 54. In so doing it may more or less press down the package on the yielding table *i*, which thereby compensates for any irregularity in the height of the packages. The descent of the plunger W serves to crease or set the paper and thereby prevent the flaps from flying up again. The plunger W then rises out of the way to admit of the next bag coming under it at the next movement of the pocket. The next movement of the pocket carries the completed package a^3 to the position (see Fig. 46) where it is plunged down out of the pocket. In this position it stands, as shown in Fig. 41, between two plungers X and Y, mounted to move vertically. The position of the plunger Y is shown in Fig. 6. The plunger X stands elevated sufficiently to permit the package to pass freely under it even if its flaps *j j* have somewhat sprung up. (See Fig. 55.) The plunger X then descends and its first movement presses down the flaps *j* flat upon the top of the package, and the instant when it reaches the top of the package the plunger Y commences to descend. The two plungers X and Y thus move downward simultaneously, carrying the package a^3 between them out of the pocket N and into the position shown in Fig. 42. The plungers dwell in this position while a pusher Z moves up against the package and pushes it out from between the two plungers and into a conveyer trunk or conduit A′. The roof or top plate *m* of this conduit engages the top of the package as soon as the latter is pushed out from under the plunger X, so that the top flaps have no opportunity to fly up, if not yet cemented down by the setting of the glue. The pusher Z moves as far as the position shown in dotted lines in Fig. 42, thereby bringing the package onto a conveyer-belt *n*, best constructed as a series of chains, and underneath a belt *p*, Figs. 42, 43, and 44. When the pusher Z has carried the package out from under the plunger X, the latter reascends out of the way of the next movement of the pocket N, and the plunger Y also ascends, and after the latter has moved up out of the way of the pusher Z this pusher moves back to its first position.

The successive packages a^3 are carried along through the conveyer-conduit A′ by resting on the traveling chains *n* beneath, and the belt *p* moves with them at the same speed as the chains. The walls of the conduit are or may be provided with steam-spaces *q q*, Fig. 43, by which to keep the conduit heated and thereby warm the packages and facilitate the drying and setting of the glue used to close the tops of the packages. The conduit A′ is made as a closed conduit for the first part of its length, and afterward by being cut away at A^2, Fig. 41, it becomes an open conduit or trough. The belt *p* is carried over the top of this trough by means of a series of rollers *p′*, mounted between the side bars of a frame *t*, which is vertically movable and is drawn down to press the belt against the tops of the packages by springs t^2, Figs. 41 and 44. The frame *t* is mounted on pins *t′* at one end, engaging upright slots in the frame, as shown in Fig. 41^b. The packages are thus fed out in succession between the chains *n* and belt *p* upon a delivery-table *u*.

Having thus described the operations performed upon the bags and packages, and the active parts or instrumentalities which directly perform these operations, I will now proceed to describe in detail the specific construction of the various parts of the apparatus, and the several mechanisms for imparting the requisite movements to the active parts or tools.

The several shafts of the machine are best shown in Fig. 45. Power is applied by a belt and pulleys, or otherwise, to a shaft 50, having worms 51 51, meshing with worm-wheels 52 52 on two vertical shafts 53 and 54, respectively. These shafts communicate motion through miter-gears to horizontal longitudinal shafts 55 and 56, respectively, which extend over the top of the machine. The shaft 55 communicates motion through miter-gears to a horizontal transverse shaft 57, and the shaft 56 communicates motion through miter-gears to a vertical shaft 58. The shaft 53 drives through miter-gears a horizontal transverse shaft 59. The shaft 54 drives through miter-gears a horizontal longitudinal shaft 60, and this in turn through miter-gears drives a horizontal transverse shaft 61. All these shafts except shaft 50 turn at the same speed, and each makes one revolution to each package that is completed on the machine.

The construction of the paper-receiving table A and of the pasting-lifters B B and the cam mechanism for operating them need not now be described, as they are fully set forth in my Patent No. 492,374, dated February 21, 1893. The table is carried on an arm 41, projecting from a slide 42, moved up or down by a feed-screw 43 in fixed bearings. This screw, (being the feed-screw *d* of that patent,) which elevates the pile of paper in proportion as sheets are fed off, carries a ratchet-wheel 44, turned by a pawl 45, pivoted on a lever 46, which is vibrated from a cam 47 through a lever 48 and link 49. The only material change in the pasters made in my present machine is in their being constructed to apply paste only at the points *b b′* with extensions b^2 b^2, Fig. 47.

The mechanism for imparting movement to the pasting-lifters is fully shown and described in my said patent, No. 505,857, my present construction being essentially unchanged except that the lifters revolve in the contrary direction. This last-named patent also fully illustrates the construction and operation of the tilting table or matrix E and its driving mechanism, as well as of the stripper *c* and its driving mechanism.

My present invention provides a new paste mechanism for applying paste to the lifters B B in lieu of the rotary paste-disk shown in my said previous patents. In my new construction the paste is placed in an open-topped box or tank 62, Figs. 5, 7, 8, 9, and 10, which may, if desired, have a steam jacket or chamber 63 beneath it, into which to introduce steam or other heating medium in case it becomes necessary to keep the paste warm. The paste-plate C, already referred to, is a horizontal plate mounted to move up and down as a plunger. It descends to the position shown in dotted lines in Fig. 9, ascends thence to the position shown in full lines in that figure, and pauses in this position long enough to have the excess of paste scraped or rubbed off from its surface by a scraping blade or arm 64, after which the plunger ascends to the position shown in Fig. 10, where it remains stationary while the lifter B descends upon it and takes up paste from its surface, after which the paste plate or plunger again descends into the body of paste. The scraper 64 moves or swings over it while it is immersed in the paste to the position shown in dotted lines in Fig. 8, and when the plunger rises to the position shown in full lines in Fig. 9 the scraper then swings across it to the position shown in full lines in Fig. 8. With the rotating paste disk or table previously used some difficulty was experienced by reason of the tendency of the paste to dry or cake upon the surface of the disk, a disadvantage which is wholly obviated by my present construction, wherein the paste plate or plunger, by descending beneath the level of the paste at each stroke, is kept moist and its surface coating of paste is continually renewed, so that no opportunity is afforded for drying or caking. In the construction shown the plunger or plate C is L-shaped, (although it might have any other suitable shape,) and it is mounted on the lower end of a vertical slide 65, which is connected by a link 66 to a lever 67, which is fulcrumed at 68, and the shorter arm of which carries a roller which is engaged by the cam-groove in a cam 69, Figs. 7 and 8, on the shaft 55. The swinging arm or scraper 64 is mounted on the lower end of an oscillatory shaft 70, to the upper part of which is fixed an arm 71, connected by a link 72 to a lever 73, fulcrumed on a vertical shaft 75 and carrying a roller engaged by the cam-groove in a cam 74, fixed on the shaft 54. (See Figs. 5, 7, and 8.)

The stripper *c* is mounted on a vertical slide 76, Fig. 7, and operated through a lever 77 from a cam (not shown) on the shaft 56, in the manner described in my said patent, No. 505,857.

The tilting table or matrix E is pivoted to a slide 78, Figs. 4 and 11, which slides longitudinally in suitable ways, being moved through a link 79 and lever 80, Fig. 4, from a cam (not shown) on the shaft 57. The tilting of the table E is effected through the engagement of its crank-arm by a link 81, Fig. 4, with a lever 82, driven by a cam (not shown) on the shaft 57. These cams and levers are fully described in my last-named patent.

The former F is of the same construction and is divided and adjustable by the same means as fully described in my said Patent No. 505,857.

The plungers L and M, which move vertically to carry the bags from the former down into the pockets, are of substantially the same construction and are moved by the same mechanism as shown in my said Patent No. 544,697. The plunger L is mounted on a vertical slide 83, guided in ways in the former F, and connected by a link 84, Fig. 4, to a lever overhead, driven by a cam (not shown) on the shaft 56. The plunger M is mounted on a vertical slide 86, Fig. 4, connected by a link 87 to a lever 88, fulcrumed on a stud 89, and having on its short arm a roller engaged by the cam-groove in a cam 90 on the shaft 59. (See Fig. 4.)

The folding-blade G and roller G′ are transposed relatively to the positions shown in my previous patents, but are otherwise unaltered. Their construction and the mechanism for operating them are fully set forth in my pending application. They are shown in dotted lines in Fig. 5, the blade G being carried on a horizontal slide 91, driven through a lever 91′ from a cam 92 on the vertical shaft 53. The roller G′ is carried on a horizontal slide 93, driven through a link 94 and lever 95 from a cam (not shown) on the vertical shaft 54.

I will now describe the mechanism for operating the folders for folding in the bottom of the bag. The first folder H, being hinged to the slide H′, partakes in part of the movement of this slide. This slide is connected by a link 96, Fig. 12, to a lever 97, which is fulcrumed on the stud 89 and is driven by a cam 98 (see Fig. 12ª) on the shaft 59. The swinging movements of the folder H are imparted to it by the mechanism shown best in Fig. 12, wherein a link 99 is hinged to the folder and connected to a lever 100, fulcrumed on the stud 89, and having a roller engaged by a cam 101 on the shaft 59. The cams 98 and 101 have their grooves so formed as to impart such relative motions to the slide H′ and link 99 as to cause the swinging folder H to execute the movements already described.

The other folders for forming the bag-bottom do not materially differ in their construction and operation or in the means for driving them from those illustrated in my said Patent No. 505,857. The wing-folders I I are formed on oscillatory shafts mounted in a slide 102, movable forward and back to give the advancing and retracting movements to the folders. This slide is driven through a link 103 and lever 104, Fig. 12, from a cam 105, Fig. 1, on the shaft 54. To impart the oscillatory movements to the folders, their shafts are formed as long pinions 106, which are engaged by transverse racks formed on

a slide 107, mounted to move in stationary ways transversely of the slide 102 and driven by being connected by a link 108, Fig. 5, to a lever 109, fulcrumed on the vertical shaft 75 and driven by a cam 110, Fig. 1, on the shaft 54. The back folding-blade J has a simple reciprocating movement, being mounted on a slide 111, Figs. 12 and 4, which is driven by being connected by a link 112 to a lever 113, Fig. 4, the upper arm of which is acted upon by a cam (not shown) on the transverse shaft 57. The cams and details not herein shown are amply set forth in my said Patent No. 505,857, these parts being to no material extent changed in the construction of my present machine.

I will now describe the mechanism for applying glue to the bottom flaps of the bags, consisting of the glue-dabbers K K, already referred to, and the means for operating them and applying glue to them. Glue or other cement is placed in a glue box or vessel 115, Figs. 4 and 12, being warmed, if necessary, by steam or other hot fluid admitted to a jacket 116, surrounding this box. The glue is lifted by a plunger 117, moving vertically. This plunger descends to near the bottom of the glue-box and ascends to a position somewhat above it, Figs. 12 and 18, where it applies the glue to the dabbers K, and afterward descends into the mass of glue. The plunger 117 is in the form of a cross-arm projecting horizontally from the bottom of a vertical slide 118. (See Figs. 1 and 19.) This slide is connected by a link 119 to a lever 120, fulcrumed at 121, and driven by a cam 122 on the shaft 56, Fig. 19. This plunger takes the place of the paste-disk N^3 in my said Patent No. 505,857 as a means for applying adhesive to the dabbers K K, (called "paster-arms N^{15}" in said patent.) The plunger 117 is provided with two adjustable pins 123, preferably screw-threaded, so that they may be set to different heights in the plunger. These pins are arranged to come in contact with the dabbers K K and constitute the direct glue-applying parts. The dabbers K K consist of swinging arms movable through approximately a half-revolution, as shown in Fig. 20^a. They might both be mounted on one oscillatory shaft, but as such shaft would be in the way of the movement of the folder H, I cut away the middle portion thereof, so that each dabber has its own short shaft, and I preferably construct this short shaft as a tubular sleeve or hub 124, Fig. 16, and mount it on a pin or stud set in the fixed framework, as shown in the sectional sketch at the right of Fig. 13. On each sleeve is fixed a pinion 125, engaged by a vertically-sliding rack 126. These racks constitute vertical slides extending upwardly and connected by links 127, Fig. 20, to a lever 128, fulcrumed on the stud 121, Fig. 1, and carrying a roller engaged by a cam 129, fixed on the shaft 56. The operation of these parts is as follows: The plunger 117 ascends, rising out of the glue and carrying the glue up to the dabbers K while the latter are in the position shown in Fig. 18 or in full lines in Fig. 20^a. The plunger then moves down slightly, (or the dabbers might lift slightly,) and they then dwell for an instant in this position to cause the breaking of the thread or string of glue which is liable to be drawn between the dabbers and plunger. Then the plunger descends, plunging beneath the glue again, while the dabbers swing forward at the proper time to the position shown in dotted lines in Fig. 20^a, thereby applying the glue to the out-turned triangular flaps of the bag-bottom, as shown in Fig. 16. The dabbers then swing back to their first position, and the plunger again rises and applies glue to them. By the dipping of the plunger beneath the surface of the glue at each stroke the latter is kept stirred and homogeneous and the surface of the plunger is continually remoistened, so that no drying or caking of the glue upon the plunger can occur.

I will now describe the construction of the pockets N and the intermittently-revolving pocket-wheel P, with the means for revolving the latter.

The wheel P is constructed with a ring or rim 130, connected by suitable spokes to a central hub 131, turning on a stationary vertical shaft 132, Fig. 4. The top of the ring 130 is flat, (see cross-section, Fig. 17,) and on its top are bolted at regular intervals castings 133, consisting of flat plates having side flanges 134 and radial walls 135, Fig. 33. These walls 135 form the side walls of the pockets N N on opposite sides of the interposed casting. The pockets have no outer or front walls, except so far as the stationary wall *g* serves as such. Their movable inner or rear walls *f* are formed as upright plates projecting from a base-plate or slide 136. The slide 136 moves radially of the axis of rotation, sliding on the flat top of the ring 130, and guided by the overhanging side flanges 134 of the castings 133 133 on its opposite sides, as clearly shown in Fig. 33. The walls 135 of each casting diverge sufficiently from each other, so that the two opposite walls of each pocket are parallel, affording between them a space of uniform width for the movement of the back wall *f*. The construction thus described greatly simplifies the making and assembling of the parts, the slide 136 taking the place of the guiding-pins shown in my previous patents.

For intermittently driving the pocket-wheel I employ the mechanism shown best in Fig. 21. The ring 130 on the wheel P is notched on its under side with equidistant notches or recesses 137, equal in number to the pockets. These notches are engaged by a propelling-bolt 138 and a fastening-bolt 139. The former is mounted on or fixed to a slide 140, working in radial slideways in a vibrating lever 141, which turns freely on the shaft 132. This lever is vibrated by means of a link 142 and lever 143, pivoted on a stud 144, and carrying on its shorter arm a roller en-

gaged by the cam-groove in a cam 145, Fig. 21, on the shaft 54. By this means the lever-arm 141 is swung from the position shown in full lines in this figure to the position indicated in dotted lines. As the bolt 138 is in engagement with the notch, this movement carries forward the wheel P the distance from one pocket to the next. The bolt 139 is then pushed forward to engage one of the notches, and the bolt 138 is retracted. These movements are effected by a cam 146, Fig. 21ª, the groove of which engages a roller carried on a lever 147, pivoted on a stud 148. One arm of this lever connects by a link 149 with the bolt 139, while the other arm connects by a link 150 with the slide 140, carrying the bolt 138. Thus the two bolts are projected and retracted alternately, being so arranged that the one which is being projected enters its notch before the other one leaves the notch with which it has been engaged. The bolt 139 slides in fixed ways or bearings 151. After the bolt 138 has been retracted and the bolt 139 projected to hold the wheel P stationary, the arm 141 is swung back to its first position, bringing the bolt 138 into line with the next notch, whereupon this bolt is projected and the bolt 139 is retracted ready for the next forward movement.

The present propelling mechanism differs from that shown in my Patent No. 505,888 in the rearrangement of the mechanism whereby the bolt 138 works from the outside of the wheel; also in the addition of the locking-bolt 139 for holding the wheel stationary during the backward movement of the propelling-bolt, and in the utilization of one cam and a two-armed lever for effecting simultaneously the opposite longitudinal movements of the two bolts. To admit of this utilization of one cam, I provide a lost-motion device through which the bolt 138 is operated, so that the variation in distance between the slide 140 and lever 147, due to the swing of the arm 141, is taken up. In the preferred construction shown this lost-motion device consists of an open slot 152 in the end of the link 150, engaged by a pin or stud 153 set in the end of the lever 147, the amount of lost motion being regulated by the adjustment of a screw 154, passed through the slotted end of the link. The swing of the arm 141 imparts sufficient endwise movement to the link 150 to shift the stud 153 from one end of the slot to the other, so that when the lever 147 is moved it actuates both bolts simultaneously.

My present invention provides improved and simplified means for expanding and contracting the pockets N, that is to say, for moving the rear walls *f* out or in. The slide 136 of each pocket carrying the movable wall is formed with an upwardly-projecting tooth or lug 160. (See Figs. 33 and 18.) The projecting lugs 160 serve as means by which to engage and operate the pockets by the pocket expanding and contracting mechanisms. The first contraction of the pocket at the moment that the newly-made bag is plunged into it is effected by means of a roller or pusher 161, carried on a slide 162, Figs. 12 and 4. This slide is moved longitudinally by means of a link 163 and lever 164, Fig. 4, the latter pivoted on a horizontal stud 165 and carrying on its upper arm a roller engaged by a cam-groove in a cam 166, fixed on the shaft 57. The same slide carries a pendent finger or pusher 167, projecting on the opposite side of the lug 160, for expanding the pocket. The operation is as follows: During the time that the pocket-wheel P is moving forward the slide 162 stands in the position shown in Fig. 12, so that the lug 160 may freely pass about midway between the operating-fingers 161 and 167, so that there shall be no danger of its striking either. After the pocket has come to rest, (the pocket being now contracted,) the slide 162 moves back, so that the finger 167 strikes the lug 160 and draws back the movable wall of the pocket to expand the latter, ready to have the newly-made bag plunged down into it. While the plungers L and M are carrying down the bag, the slide 162 is moving forward, and when the plungers have carried the bag nearly to the bottom of the pocket the finger 161 strikes the lug 160 and moves it forward, thereby pressing forward the wall *f* and contracting the pocket to cause it to grasp the bag. The slide 162 subsequently moves back to the first position, ready for the next advance movement of the pockets. The pockets remain thus contracted, holding the bags until reaching the position where the material is filled into the bags. On moving away from this position the lug 160 of the pocket encounters a roller-cam 168, the position of which is best shown in Fig. 46. This roller is carried on a fixed pendent arm 169, Fig. 4. The position of the roller is such that the lug 160 in moving past it is thrust outward sufficiently to expand the pocket to the required extent, that is, to leave the contained bag free or loosely confined in the pocket, so that it may be easily raised and dropped therein in the operation of shaking down. The pockets remain thus expanded until they reach the position where the top of the bag is closed. On moving to this position the lug 160 runs against another roller-cam 170, in the position clearly shown in Fig. 46, and also shown in Figs. 4, 33, and 34. The position of this cam is such that the lug in moving against it is thrust outward sufficiently to contract the pocket upon the bag and thereby hold the latter with the requisite firmness for properly supporting it during the operations of folding in and closing the top of the bag. By comparing my present mechanism for contracting and expanding the pockets with the mechanism shown in my said Patent No. 505,888 it will be seen that I have considerably simplified the means for effecting the requisite movements.

The means for shaking down the contents of the bag when it reaches the positions over

the pins *h h'* does not differ materially from that shown in Fig. 18 of my Patent No. 505,888, except that in the present instance I have duplicated the pins, so that the shaking down is performed twice in two successive positions of the bag, the pins *h* performing the first shaking and the pins *h'* the second shaking operation. The pins are mounted on two spring-plates 155 underneath, Fig. 6, and connected by links 156 to a lever 157, having a tooth acted on by an angular-toothed cam 158 on the shaft 61, Fig. 2.

I will now describe the means for applying glue or other adhesive to the tops or mouths of the bags preparatory to the top-closing operation. This mechanism forms an important and novel part of my present invention. The glue or other adhesive substance is contained in the glue box or vessel 180, having preferably a steam space or jacket 181 provided beneath it, by admitting steam or other fluid to which the bath of adhesive material may be kept warm. The glue-plunger S has a vertical movement, descending first into the mass of glue to the position shown at 1 in Fig. 30, then ascending to the position shown at 2 in that figure, and there pausing, both to permit the surplus glue to drain off and run back into the bath and also to permit a scraper S' to move across the top of the plunger to remove the excess of glue from its glue-applying faces or sections. During this pause the scraper S' moves from the position shown in dotted lines in Fig. 30 to that shown in full lines. The plunger then continues its upward movement until it reaches the position shown at 3 in Fig. 30, or a slightly higher position, where it applies the glue to the dabbers R. The plunger then descends and plunges again beneath the bath of glue to its first position, after which the scraper S' moves over it to the position shown in dotted lines.

The dabber R at the instant of receiving glue occupies the position 4 in Fig. 30, its wings being outstretched. After the plunger commences to descend this dabber moves to the left in this figure at the same time that its wings swing toward each other until it reaches the position shown in the dotted lines at 5. It then commences to descend and moves down until its center is in the position 6, the wings being still open, and one of them being entered within the mouth of the bag and the other outside, whereupon its two wings move together, as shown, and press the paper between them, thereby applying to it the glue they have taken from the plunger. The wings then partly open, and the dabber moves back to the position 5 and then returns to position 4, its wings completing their opening movement.

The plunger S carries sections or glue-applying portions *s'* to *s*^{5}, already referred to. In the construction shown the plunger is formed as an arm projecting from a vertical rod 182, which itself forms the downward continuation of a slide 183, mounted to move vertically in suitable ways. This slide is best shown in Figs. 2 and 7. It is connected by a link 184 with a lever 185, (see Fig. 7^a,) pivoted at 186 and carrying a roller engaged by the groove of a cam 187 on the transverse shaft 55. By means of this cam the described vertical movements are imparted to the plunger.

The scraper S' is constructed with a frame or bar 190, to which the scraping-plates 191 for the respective glue-sections are fastened. (See Figs. 5, 31, and 32.) The bar 190 is fixed on one end of a slide 192, Fig. 31, moving in suitable ways on a fixed frame, and connected by link 193 to a lever 194, turning on a vertical axis 195, and the other arm 196 of which is connected by a link 197 to a lever 198, Fig. 32, carrying a roller which works in the cam-groove of a cam 199 on the transverse shaft 61.

The glue-dabbers R R (lettered, respectively, R', R^2, and R^3) are all of substantially like construction, (see Fig. 29,) their construction being shown in detail in Figs. 25 to 28, which show the dabber R'. Each dabber is pivoted on a fixed stud 201, fastened to a carrying-frame or bracket 211. On this stud is a rotatively-mounted sleeve or tubular shaft 202, formed at one end with a pinion 203 and having fixed on its other end the hub 204, which has an arm carrying one of the wings or glue-fingers *r*. Another sleeve or tubular shaft 205 is mounted to turn freely on the sleeve 202 and is formed at one end with a pinion 206, while at its other end it has an arm carrying the other finger or wing *r* of the dabber. The two pinions are engaged on opposite sides by racks 213 and 216 respectively projecting from a slide 207, Fig. 28, mounted to slide in vertical ways, as shown in Fig. 26, in the bracket 211. It results from this construction that by moving the slide upward the wings are thrown out to the position shown in Fig. 27 or in dotted lines in Fig. 28, or by moving the slide downward the wings are turned down and toward each other, as shown in Figs. 25 and 26.

The wings are provided with projections wherever it is desired to apply the glue, these projections being tinted in Fig. 24. I find it preferable to apply glue in a succession of dots, as shown, rather than in a continuous stripe or band. For this purpose I arm the glue-applying faces of the wings with a succession of small projections or tips, which may be made as plugs of rubber or other soft material. Wherever either wing is so provided with glue-applying tips, the opposite wing is formed with projections coincident with them, which may be of elastic rubber, and which serve to press the paper which is grasped between the wings, Fig. 26, against these glue-applying tips to take the glue therefrom. Referring to Figs. 24 and 29, (in which latter the glue-applying tips only are shown in dotted lines,) the wings *r'* and *r*^{4}

are constructed to apply a rectangular series of dots of glue against the inside of the bag, in the positions shown on the bag in Fig. 23. The wings r^2 and r^3 are provided with only a single glue-applying tip, (lettered 208 in Fig. 24,) which serves to apply glue to the exterior of the sides of the bag in such manner that in the operation of forming the top of the bag, as shown in Fig. 53, the glue will be found in the positions marked 209 in that figure. The wing r^5 is provided with projecting tips adapted to apply a gridiron figure of dots of glue to the inside of the back flap of the bag, the opposite wing r^6 having corresponding projections serving solely for pressing the paper against the glued tips.

The three dabbers R R are all carried by one frame 200, which is constructed generally of a horizontal plate 210, having three upright brackets 211 fastened beneath it, each of these brackets serving to support one of the dabber-studs 201, and providing ways for guiding the rack-slide 207. The plate 210, Fig. 23^c, is mounted to slide horizontally between ways 216, formed in brackets 212, projecting from opposite sides of an upright slide 214, Fig. 23^b, movable in vertical ways 215, Figs. 23, 2, and 5, carried on the fixed frame of the machine.

The bodily movement of the dabbers from the position 4 in Fig. 30 to the position 5 is effected by a horizontal sliding movement of the slide 200. The bodily movement from the position 5 in Fig. 30 to 6 is effected by a vertical movement of the slide 214. The slide 200 is operated from a cam 217, Fig. 23^a, the groove in which engages a roller carried on a lever 218, fulcrumed on a stud 219, the opposite arm of which lever connects by a link 220 with the plate 210 of the slide. The slide 214 is moved up and down by means of a cam 221, Fig. 2, on the shaft 57, the groove in this cam engaging a roller carried on a lever 222, the opposite arm of which connects by a link 223 with the slide. The opening and closing movements of the wings being effected, as already described, by the vertical movement of the rack-slides 207 relatively to the slide 200, the following-described mechanism is provided for operating these rack-slides: The three slides are connected each to a cross-bar 224, to which is connected a link 225, Fig. 23, pivoted to the end of a lever 226, pivoted at 227 to the slide 200, and connected by another link 228 to one arm of a lever 229, fulcrumed at 219, the other arm of which carries a roller which is engaged by the cam-groove in a cam 230, Fig. 23, on the shaft 55. This latter cam is shaped so as to impart to the rack-slides the proper vertical movements to maintain the requisite relation to the horizontal and vertical movements of the slide 200 necessary to impart the proper swinging motions to the wings, as shown in Fig. 30. It results from these mechanisms that the three dabbers R R move simultaneously, all standing in the position 4, Fig. 30, with their wings open to receive glue from the plunger S, and then all partly closing and descending into the bags, and then completing their closing movements, so as to apply the glue to the bags, the first dabber R′ applying the glue to the left side or flap of one bag, the second dabber R^2 applying it to the right side or flap of a second bag, and the third dabber R^3 applying it to the rear side or flap of a third bag. Thus each bag in its progress has all three of its sides or flaps gummed in three successive positions.

The combination of a glue-plunger moving beneath the bath of glue and up above its surface, a scraper for removing the excess of glue from its surface, and a dabber for receiving glue from the plunger and transferring it to the paper is not claimed in my present application, nor is the construction of the dabber with folding wings and the pinions and sliding racks for operating them herein claimed, these features being the subject of claims in my Patent No. 561,141, dated June 2, 1876.

I will now describe the mechanism for closing the top of the bag. This mechanism in its general features resembles that shown in my said Patent No. 505,888, but differs therefrom in the omission of means for applying paste to the triangular side flaps, since glue is already applied thereto in the positions 209, Fig. 53. The slide T′, to which the first folding-blade T is hinged, is connected by a link 231 to a lever 232, turning on an upright shaft 233, and carrying on its opposite arm a roller engaged by the groove in a cam 234, Fig. 33, on the upright shaft 53. The swinging movements of the blade T are imparted to it through the medium of a link 235, connected to a slide 236, Fig. 35, which is connected by a link 237 to a lever 238, turning on a vertical shaft 239, and carrying on its opposite arm a roller engaged by the cam-groove in a cam 240, Fig. 36. The two cams 234 and 240 are so shaped as to impart to the respective slides T′ and 236 such relative movements as are requisite to impart the described longitudinal and swinging movements to the folding-blade T. The wing-folders U U are formed, as heretofore, on the ends of oscillatory shafts 245, having bearings in the longitudinal slide 241, which is connected by a link 242, Fig. 37, to a lever 243, turning on the shaft 233, and carrying a roller which is engaged by the cam-groove in a cam 244 on the same shaft 53. The said oscillatory shafts are formed as heretofore with longitudinal grooves constituting them elongated pinions, and these pinions are engaged by racks on a transverse slide 246, moving in stationary slideways, and connected by a link 247, Fig. 38, to a lever 248, turning on the shaft 239, and carrying on its opposite arm a roller engaged by the cam-groove in a cam 249 on the shaft 53. By the coöperation of these two cams 244 and 249 the wing-folders U U are given the described longitudinal and oscilla-

tory movements. The opposite folding-blade V is carried on a spring-plate 250, Fig. 34, fastened to a slide 251, which moves longitudinally in stationary ways, the plate 250 tending to spring upwardly from its surface, and the extent of its upward movement being adjustable by a stop-nut 252. For moving the slide 251 it is connected by a link 253 to a bell-crank lever 254, the opposite arm of which is jointed to a connecting-rod 255, Fig. 34, which extends upwardly, and its upper end is jointed, as shown in Fig. 34[a], to an elbow-lever 256, pivoted at 257, and having a roller on its upper arm which is engaged by the cam-groove in a cam 258, fixed on the shaft 55. The vertically-moving plunger W is connected to the lower end of a slide 260, Fig. 34, the upper end of which is shown in Fig. 34[b], being connected by a link 261 with a lever 262, pivoted at 263, and having a roller engaged by the cam-groove in a cam 264 on the shaft 55. The yielding table *i*, on which the bag rests, is mounted on a vertically-moving slide 265, Figs. 34 and 40, this slide having a laterally-projecting arm 266, through which passes an adjusting-screw 267, having a stop-shoulder 268, against which shoulder the arm 266 strikes when the plate is fully pressed up by the spring 269 on which it is seated, through the medium of the slide and arm against which the spring presses. By turning an adjusting hand-wheel 270 motion is communicated through miter-gears to the screw 267 for screwing it up or down to thereby raise or lower the stop-shoulder 268, and thereby vary the height to which the table may be pressed up by the spring.

The mechanism for plunging down the completed package and thrusting it into the conveyer-conduit A′ will now be described. The two plungers X and Y are mounted on vertically-moving slides arranged in line one above the other. The plunger X is mounted on the slide 275, Fig. 41, which is connected by a link 276 to a lever 277, Fig. 41[a], pivoted on a stud 278 and carrying on its opposite arm a roller engaged by the cam-groove of a cam 279 on the shaft 56. (See Figs. 41[a] and 7.) The plunger Y is mounted on a slide 280, (shown in dotted lines in Figs. 41 and 42,) which slide is connected by a link 281 to a lever 282, Fig. 41, pivoted on a stud 283 and carrying a roller engaged by the cam-groove in a cam 284 on the transverse shaft 61. The pusher Z is mounted on an angular arm or plate 290, fixed on a slide 291, Figs. 42 and 6, moving in guideways in line with the conveyer A′. The plate 290 has a recess or opening 292, large enough when the pusher is advanced to the position shown in dotted lines in Fig. 42 to enable the plunger Y to ascend through this space. The slide 291 is operated through a connecting-link 293 and lever 294, pivoted on a vertical stud 295, Fig. 6, and having on its opposite arm a roller engaged by the groove in a cam 296 on the shaft 54. The cams 279 and 296 impart simple reciprocating movements to the plunger X and pusher Z, respectively, while the cam 284 imparts to the plunger Y a long dwell in its lowest position, Fig. 42, during which the pusher Z pushes the package out from between the plungers and into the conduit, and then raises it to its highest position, Fig. 41, holding it stationary there for a short time while the pusher Z moves back, and then moving it down coincidently with the descent of the plunger X. The slide 280 of the plunger Y is arranged to one side of the path of the pusher Z to admit of the retraction of the latter while the plunger Y is elevated. These successive movements are those which admit of the best timing of the parts, but it would be within my invention to so modify the cams as to cause the pusher Z to advance and retract before the plunger Y commences to ascend.

The conveyer-chains *n* are carried over sheaves or idler-pulleys 297 at one end and driving-pulleys 298 at the other, Fig. 41, the latter pulleys being mounted on a shaft 299, on which is fixed a sprocket-wheel 300, (shown in dotted lines in Fig. 41,) driven by a chain 301 (shown also for clearness in dotted lines) from a sprocket-wheel 302 on an oblique shaft 303, which is driven through a universal coupling 304 or any equivalent connection, Fig. 6, from a shaft 305, carrying a sprocket-wheel 306, which is driven by a chain 307 from a sprocket-wheel 308 on the transverse shaft 61. The sprocket-wheels 309, Fig. 41, serve to lift the chains *n* out of the way of the shaft 303, as well as to take up any slack in these chains, by adjusting these wheels higher or lower by means of an adjustable bracket 310, on which they are carried.

The belt *p*, forming the top of the conveyer, is carried at one end over a driving-pulley 311 and at the other end over an idler 312, Fig. 41, another idler 313 being arranged close to the driving-pulley to wrap the belt closely around it and give it the requisite adhesion. The pulley 311 is fixed on a shaft 314, on which is fixed a sprocket-wheel 315, driven by means of a chain 316, Fig. 4, from a sprocket-wheel 317, fixed on the driving-shaft 299, the chain 316 being carried partly around this latter sprocket-wheel by means of an idler sprocket-wheel 318 beneath, whereby the shaft 314 is revolved in the contrary direction to the shaft 299, which drives it.

All the active parts of the machine are supported by a stationary frame or framework, which requires no special description, being clearly shown in the drawings.

One feature of my present invention it has been found impracticable to show in its correct proportion in the drawings, and I have therefore prepared two diagrammatic views, Figs. 55 and 56, wherein this feature is shown upon a sufficiently exaggerated scale to render it perceptible. I refer to the construction of the stationary table O, around which the bags are caused to slide by the movement of

the pockets. Heretofore this table has been made exactly horizontal, so that during the entire rotation of the pockets the table stood at the same distance beneath them. I now mount the table O so that it stands spirally, somewhat as indicated in Fig. 55, although the divergence from the horizontal is there much exaggerated. In fact, in a machine wherein the table has a diameter of seven feet and in which the bags are of the proper size for holding each two pounds of sugar the table is arranged three-eighths of an inch lower at the location where the bags are plunged down into the pockets than it is at the location where the bag is filled with material from the chute. The effect of this construction can be best understood with reference to Fig. 56, which shows a development of the pockets and table in a straight line. At the entering end the bag is thrust down until its bottom rests upon the table, as shown at the right in this figure, and as the pockets advance, the bag, moving toward the left, slides continually onto a higher portion of the table, so that while the bag is grasped frictionally by the pocket, which remains contracted upon it, the table exerts an upward pressure against the bottom of the bag, which serves to press the bottom flaps constantly into closer contact, and thereby materially facilitates the cementation of the pasted or glued seams of the bag-bottom. Essentially this inclination of the table should continue until the bags are released just after being filled from the chute Q, any further inclination after the release of the filled bags being without effect upon them.

I have described the table O as though it were a continuous annular plate. In practice, however, I interrupt this plate at 320, Fig. 6, that is to say, in the position occupied by the bag while being filled with material, providing for the support of the bag two bars or rails 321, on which the bags may slide and by which they are supported. This construction provides ample openings by means of which, in case of any defective bag, the sugar or other material is permitted to leak through, and the leakage falls below the plate instead of accumulating on its surface, where it might cause difficulty. The two bars or rails 321 afford an ample support for the bag and prevent any bulging or distortion of its triangular bottom flaps. Where the pins h h' are arranged, the plate or table is restored in the form of a plate 322, onto which the bags may drop when released by the descent of the pins in their vibration. From this plate around to the plate i the bags ride on a single supporting-rail 323, which is carried on brackets 324 from a portion of the fixed framework. Thus, except for the plates 322 and i, the bag from the moment it is filled is supported on mere narrow rails, so that any leakage of material from the bags in case they are torn or defective can do no harm.

A detail of construction shown in Fig. 22 remains to be described. A brush 325 of suitably stiff bristles is arranged between two pockets to sweep the surface of the table O, and thereby remove any grit or any particles of the material being packed that may find their way onto this table. One or more of these brushes may be provided, or a brush may be introduced between every pair of pockets.

It must not be inferred from the minuteness of detail with which I have hereinbefore described the preferred embodiment of my invention that I am necessarily limited to the exact constructions or arrangements shown and described, since in fact my invention is susceptible of considerable modification without departing from its essential features. These features I have sought to define in the claims terminating this specification. Nor must it be understood that my invention is limited to the literal or commonly-accepted meaning of the terms used to designate the several parts of my machine, as in many instances the most definite and unmistakable term has been chosen for the sake of exactness in the description, whereas the true scope of my invention would justify the use of terms more comprehensive or generic. For example, in referring to the pockets by which the bags are carried I do not wish to be confined to structures that are necessarily such as a workman would understand as pockets, but any equivalent carrying devices for the bags are within the scope of my invention in its broader aspects. Although I have described the pockets as being fastened to a pocket-carrying wheel P, whereby the pockets travel in a circle, yet my invention is not limited to this detail, as the pockets might be otherwise mounted and arranged to move in other than circular paths without thereby necessarily departing from my invention. In short, any sort of carrier for carrying or propelling the bags from the location of the bag-making mechanism to the locations for filling the bags and closing their tops is within the essential scope of my invention. The bag-making mechanism considered as a whole is not essentially new with my present invention, and so far as my present invention is concerned it might be substituted by any other known mechanisms capable of making a bag or bags and depositing the same in the pocket or carrier. The drier for drying the bags while carried in the pockets consists, essentially, of a heated plate against which the bags are moved, or some equivalent part adapted to heat the bags and thereby expel the moisture from their seams, this heated plate being the outer plate g with its steam-jacket g' for drying the outer seam, or the table O with its steam-chamber O' for heating the bottom; but other means of heating these plates than by introducing steam might be substituted.

In my previous machine the bags are plunged from the bag-making mechanism into the pockets and immediately thereafter filled, shaken down, and closed to form packages,

these packages being conducted by the movement of the pockets under a steam-heated plate or table to dry their tops and being finally expelled from the pockets after traversing nearly the entire circle. By that construction no opportunity was afforded for drying the bag before filling it. By my present construction, on the contrary, the bag after being introduced into the pocket is carried for a considerable distance in the pocket before it reaches the filling position, and is then filled, shaken down, and has its top closed to form it into a package. After thus forming it into a package it is thrust out of the pocket, and the packages are carried through a delivery-conduit, in which the same function of drying the top of the package is performed as was performed while in the pockets in my previous construction. This new feature of expelling the packages from the pockets as soon as they are completed and drying them in another carrier or conveyer is preferable and advantageous, because it avoids the necessity of making the pocket-carrying wheel as large and the pockets as numerous as would otherwise be necessary; but it is a feature which may be departed from without necessarily discarding the other portions of my invention. It will be understood that the delivery-conduit constitutes, essentially, a drier, being provided with means for heating it, if necessary, to dry the tops of the packages. Thus my machine includes two driers, a first drier for drying the open bags before they are filled, and a second drier for drying the tops of the completed packages, with carriers for carrying the bags through the first drier and for carrying the closed packages through the second drier.

In the mechanism for closing the bottom of the bag the improvement consisting of the swinging folder H has the advantage over the sliding folder M^2 in my said Patent No. 505,857, that it tucks in the first fold of the bag more positively and uniformly and more certainly avoids any liability of tearing the paper, as would occasionally occur with a sliding folder, notwithstanding the addition to the latter of an inclined folder (lettered M^3 in said patent) for first turning in the paper before the entry of the sliding blade. The first flap of the bag-bottom is thus folded up by a natural movement, the folder swinging from a vertical position (or sufficient approximation thereto) to the horizontal, substantially as the paper being folded is turned from the vertical to the horizontal, and being of the full width of the folded flap, so that its edges serve to break or crease the paper without liability of tearing it. The new mechanism for applying adhesive to the bottom of the bag, consisting of the dabbers K K, combined with the glue-plunger 117, is simpler than the previous construction of a revolving paste-disk which was pushed under the dabbers while the latter were swung back, was touched by them, and then moved back out of the way to permit them to swing forward, (see Patent No. 505,857, Fig. 31,) and has the further advantage of avoiding any caking or drying of the adhesive, keeping the latter constantly stirred to render it homogeneous, and applying a uniform quantity of adhesive without requiring close adjustment.

My improved construction of the pockets, whereby the movable back wall is mounted on a slide projecting radially rearward from the pocket, not only simplifies the construction, but enables all the pocket-operating mechanisms to be arranged within the circle of pockets, instead of being partly outside that circle, as heretofore, and enables stationary cams or rollers to be in part substituted for the movable parts previously used for actuating the pockets. Previously each pocket was constructed of one shell or casting with its movable wall, and the front or outer side of the pocket was closed. I now make the front or outer side open to facilitate the drying of the side seams, and each pocket is constructed of two castings on opposite sides, each casting forming the sides of two adjoining pockets, as well as the slideways for the slides carrying the movable walls.

In my previous construction the adhesive for closing the top of the bag was applied to the sheet of paper at the same time with the paste for the side and bottom seams. (See Fig. 1 of Patent No. 505,857.) In that machine the bag was immediately filled and its top closed, so that the closing of the top occurred before this paste applied to the top had time to dry. In the present machine, as the bags are dried before being filled, any adhesive so applied to the top would be liable to dry, and I therefore apply the adhesive for closing the top or mouth after the drying and filling and immediately before the top-closing operations; and instead of applying the adhesive in a band or strip on one flap only, as before, I now apply it in a succession of dots or portions of reduced area extending over a large surface of each of three of the four sides or flaps of the top of the bag, and at the same time I also apply the adhesive to the outer surface of the side flaps, where, when the top is folded, it shall serve for holding down the triangular flaps, instead of applying the adhesive for this purpose during the operation of closing the top of the bag.

In my former construction the first operation of closing the top of the bag consisted in lowering the bag bodily (by a plunger U, Figs. 21 and 28 of Patent No. 505,888) and then raising the bag coincidently with the advance of the first folder or folding-blade which had a sliding movement, whereby the top of the bag was turned or curled inward without breaking the paper. My present construction constitutes an improvement upon this mechanism, in that the initial lowering and then raising of the bag is avoided.

Instead of the bag being held on a plunger which descends and then ascends, it is held on the spring-mounted plate or table *i*, so that the bag remains stationary. This is rendered practicable by the construction of the first folder T as a swinging blade instead of merely a sliding one, so that this blade by first acting upon the paper considerably above the contents of the bag turns it in neatly without risk of tearing it and then presses it down flat upon the contents, thereby neatly creasing or breaking the paper at the sides of the folder and at the same time forming the contents of the bag into a level mass on top, against which to complete the folding operations.

My previous construction made no provision for variations in the height of the contents of the bag and consequently in the height of the completed package, due to variations in the bulk of the material being packed. Where a given weight of the material is to be packed instead of a measured bulk and where the nature of the material is such that its bulk varies in proportion to its weight, it is desirable to provide for variations in the bulk of the packages. If the variations in bulk were to occur only at infrequent intervals, so that they could be known considerably in advance, provision might be made for them by changing the capacity of the package by the means provided by my previous construction, that is to say, by varying the thickness or width of the bag by an adjustment of the former on which it is made, such as is provided for in my Patent No. 505,857. (See Figs. 22 and 23.) The same means of adjustment is provided in my present machine, but is not sufficient to compensate for changes of bulk occurring suddenly or without warning. For such changes a variation in the height of the packages must be allowed, and it is for this purpose that my present invention introduces the yielding support for the bag while its top is being closed, consisting of the plate or table *i* and its elastic mounting. This plate is adjusted to hold a bag, the contents of which are of minimum bulk, so that the level of the contents shall be in the proper plane for the action of the top folders. When the contents are of greater height, the bag is pressed down first by the downturning of the folder T, and subsequently by the pressure of the plunger W. It will be apparent that this feature of my invention might be modified by introducing the yielding quality in some other part or parts of the mechanism, as, for example, in the presser W, and also, if necessary, in the folder T, that is, between these parts and those from which they derive their motion.

Instead of expelling the completed package from the pocket by plunging it downardly, it might be expelled in some other direction, as upwardly or in a radially outward direction, the downward movement being adopted for greater convenience, as there is more room for the subsequent conveyer and drier beneath the series of pockets than above. The conveyer A′ is arranged to cross beneath the pocket-wheel instead of being arranged to carry the packages in the contrary direction out of the machine solely for the sake of compactness and convenience. Any other arrangement of the conveyer, so as to deliver the packages in any different direction, is applicable.

So far as my present invention is concerned the plunger S might find its equivalent in any other suitable device adapted to take up glue from the bath and apply the glue to the dabbers. A revolving roller partly immersed in the glue is a device which may be used for this purpose.

The applying of paste at b^2 b^2, Fig. 47, is for the purpose of cementing together the inner layers of the triangular flaps *d d* of the bag-bottom, where the space between these layers communicates with the interior of the bag, so that the sugar or other material being packed would sift into this space if the flap were not sealed by means of these paste extensions.

I claim as my invention the following-defined novel features, substantially as hereinbefore specified, namely:

1. In a packaging-machine, the combination of a mechanism for making bags, means for filling the bags with material, and mechanisms for closing the tops of the bags, with carrying devices comprising a series of pockets adapted to receive the bags, to retain them until dry, and to carry them to the filling and top-closing mechanisms, and retain them during the filling and top-closing operations, whereby the bags are dried before being filled.

2. In a packaging-machine, the combination of a mechanism for making bags, a series of moving pockets for receiving and carrying said bags, means for filling the bags with material, located sufficiently remote from the bag-making mechanism to enable the bags to dry while carried by the pockets before being filled, and mechanisms for closing the tops of the bags.

3. In a packaging-machine, the combination of a revolving series of pockets, a bag-making mechanism having means for thrusting the completed bags into said pockets, means for filling the bags with material, located remotely from said bag-making mechanism, a drier arranged to act on the bags in their travel from the making to the filling positions, and mechanism for closing the tops of the bags.

4. In a packaging-machine, the combination of a revolving carrier-wheel, a series of pockets carried by said wheel, a heating-jacket extended along the path of travel of said pockets to constitute a drier, a bag-making mechanism having means for thrusting the completed bags into said pockets, arranged at one end of said drier, means for filling the bags with material, located at the other end of said drier, and a mechanism for closing the tops of the bags.

5. In a packaging-machine, the combination of a revolving carrier-wheel, a series of pockets carried by said wheel, a table over which said pockets travel having means for heating it to constitute a drier for the bag-bottoms, a bag-making mechanism having means for thrusting the completed bags into said pockets, arranged at one end of said drier, means for filling the bags with material, located at the other end of said drier, and a mechanism for closing the tops of the bags.

6. In a packaging-machine, the combination of a revolving carrier-wheel, a series of pockets carried by said wheel having open outer sides, a drier consisting of a heated wall arranged to close said open sides of the pockets, a bag-making mechanism adapted to deliver the bags into said pockets with their upright seams on the open sides thereof against said drier, a means for filling the bags, and a mechanism for closing the tops of the bags.

7. The combination of a revolving carrier-wheel, a series of pockets carried by said wheel, having each a movable wall, mounted on a radially-movable slide, projecting behind the pocket, slideways in the wheel for said slides, and mechanisms for engaging said slides to move them for expanding and contracting the pockets.

8. The combination of a revolving carrier-wheel, a series of pockets carried by said wheel, having each a movable wall, mounted on a radially-movable slide, the said pockets constructed with sections or castings between each two pockets forming the side walls thereof, and radial slideways in which said slides may move.

9. The combination of a revolving carrier-wheel P, sections or castings 133 fixed thereto having walls 135 and slideways 134, and movable walls *f* between the pairs of castings, mounted on slides 136 confined between said castings and movable in said ways.

10. The combination of a revolving carrier-wheel, a series of pockets carried by said wheel, having each a movable wall, mounted on a radially-movable slide, projecting lugs on said slides, and mechanisms for contracting or expanding the pockets adapted to engage said lugs to move the slides out or in.

11. The combination of a revolving carrier-wheel, a series of pockets carried by said wheel, having each a movable wall, mounted on a radially-movable slide, projecting lugs on said slides, and a mechanism for expanding and contracting the pockets consisting of a radially-movable part 162 having projections 161 and 167 receiving said lugs between them and movable against the lug to displace the slide first in one direction to expand the pocket and then in the contrary direction to contract it.

12. The combination of a revolving carrier-wheel, a series of pockets carried by said wheel, having each a movable wall, mounted on a radially-movable slide, projecting lugs on said slides, and a mechanism for expanding the pockets consisting of a stationary cam 168 arranged at a point in the rotary path of the pockets to be encountered by said lugs in passing, and by impingement upon them to displace them and thereby move the slides back.

13. The combination of a revolving carrier-wheel, a series of pockets carried by said wheel, having each a movable wall, mounted on a radially-movable slide, and a mechanism for contracting the pockets consisting of a stationary cam 170 arranged to be encountered by said slides in passing, and by impingement upon them to displace them and thereby move the slides forward.

14. The combination of a series of movable pockets, a bag-making mechanism adapted to deposit bags in said pockets, and a table extending beneath said pockets, over which the bags are carried by the pockets, arranged on an incline relatively to the pockets so that as the bags are moved over the table the latter approaches closer to the pockets and thereby exerts a continued pressure against the bag-bottoms.

15. The combination of a series of movable pockets, a bag-making mechanism adapted to deposit bags in said pockets, means for contracting the pockets to grasp the bags, a table extending beneath said pockets, over which the bags are carried by the pockets, arranged on an incline relatively to the pockets so that as the bags are moved over the table the latter approaches closer to the pockets and thereby exerts a continued pressure against the bag-bottoms while the bags are grasped by the pockets, and means for expanding said pockets to release the bags.

16. The combination in a packaging-machine, of a bag-making mechanism, a series of movable pockets receiving the bags therefrom and carrying them to a filling position, means for filling the bags in said latter position, mechanisms for closing the tops of the bags, and a stationary table extending beneath said bags, over which the bags are carried by the pockets to the filling position, and a skeleton extension of said table at the filling position and extending thence to the top-closing position, consisting of a narrow rail or rails supporting the bag-bottoms and over which the filled bags are caused to slide by the movement of the pockets, whereby any material that may spill or leak from the bags or pockets is discharged from said narrow rails.

17. The combination of a revolving carrier-wheel, a series of pockets carried by said wheel, a series of notches in said wheel corresponding in spacing with said pockets, and a mechanism for intermittently rotating said wheel and holding it stationary between its movements, consisting of a radial arm, a propelling-bolt carried thereby and movable radially to enter or leave said notches, a cam and lever engaging said radial arm for swinging it at intervals, a locking-bolt movable in

stationary bearings to enter or leave said notches, a two-armed lever having one arm connected to the propelling-bolt and the other to the locking-bolt, to move them oppositely, and a cam for moving said lever at intervals between the movements of the arm.

18. The combination with carrier-wheel P having notches 137, of swinging arm 141, bolt 138, cam 145 for swinging said arm, locking-bolt 139, two-armed lever 147, connections between the opposite arms thereof and said bolts, with a lost-motion device in one of said connections, and a cam 146 for moving said lever.

19. The combination of paste vessel 62, paste-plate C, slide 65 carrying it, cam 69, and intermediate connections for imparting vertical motion to said plate, scraper 64, oscillatory shaft 70 carrying it, cam 74 and intermediate connections for oscillating said shaft to cause said scraper to move over the paste-plate.

20. In a bag-making machine, a folder for making the first fold in one end of the bag, consisting of a plate, and mechanism for moving it adapted to impart to it a swinging movement while it is folding in the paper, and a sliding movement while it is being retracted from the bag.

21. In a bag-making machine, the combination with a former and means for forming a paper tube around it, of a folder H for first turning in the bottom of the tube, consisting of a hinged plate, a slide movable transversely to said former to which said plate is hinged, mechanism for advancing and retracting said slide and for swinging said folder relatively thereto, so that the folder executes a swinging movement while folding in the paper and a sliding movement while retracting from the bag, and folders for completing the formation of the bag-bottom.

22. In a bag-making machine, the combination with former F, of swinging folder H, slide H′ to which said folder is hinged, cam 98 connected to reciprocate said slide, and cam 101 connected to swing said folder H, constructed and adapted to cause said folder to swing from approximately an upright to a horizontal position while folding in the paper against said former, to slide out horizontally while being retracted, and to subsequently swing back to the upright position.

23. In a bag-making machine, the combination with former F, of first folder H, wing-folders I I, and back-folder J, with driving mechanisms for operating them adapted first to advance and swing up the folder H against the under side of the former, then to advance the wing-folders I I along its sides while turned inwardly, then to oscillate these wing-folders to cause them to turn outwardly in opposite directions, at the same time to slide out horizontally the first folder H and advance the back-folder J beneath the former, then to swing inwardly the wing-folders and simultaneously withdraw the folder J, then to retract the wing-folders until they are drawn back of the first folder H, and finally to swing this folder down ready for the next operation.

24. In a packaging-machine, the combination of a bag-making mechanism, carriers for the bags, means for filling the bags with material, gumming mechanism for applying adhesive to the open tops of the filled bags, and a top-closing mechanism for subsequently folding in the gummed tops of the bags.

25. In a packaging-machine, the combination of bag-making mechanism, carriers for the bags, means for filling the bags with material, gumming mechanism for applying adhesive to the open tops of the filled bags adapted to apply adhesive by successive movements in successive positions of the bag to separate portions of the top thereof, and a top-closing mechanism for subsequently folding in the tops of the bags.

26. In a packaging-machine, the combination with pockets for carrying filled open-mouthed bags, of a top-gumming mechanism comprising a vessel containing adhesive, a dabber movable to apply adhesive to the open tops of the bags in said pockets, means for applying adhesive to the dabbers, and a top-closing mechanism for subsequently folding in the tops of the bags.

27. In a packaging-machine, the combination with means for carrying filled open-mouthed bags, of a top-gumming mechanism consisting of a vessel containing adhesive, a dabber, means for applying adhesive thereto, said dabber constructed with folding wings adapted to stand open while receiving adhesive, movable relatively to the bag so that one wing enters the open top thereof while the other is exterior thereto, and said wings adapted to close upon the bag to press the latter between them in applying adhesive thereto.

28. In a packaging-machine, the combination with means for carrying filled open-mouthed bags, of a top-gumming mechanism comprising a plurality of dabbers, means for applying adhesive to said dabbers, and means for moving the dabbers to apply the adhesive to the bags, said dabbers constructed to apply the adhesive simultaneously to different bags and in different positions relatively to the bags, whereby each bag receives adhesive in different positions by successive movements of the dabbers.

29. In a packaging-machine, the combination with means for carrying filled open-mouthed bags, of a top-gumming mechanism comprising three successive dabbers, means for applying adhesive to said dabbers, and means for moving the dabbers to convey adhesive to the bags, the said dabbers constructed one to apply adhesive to the right side of the bag, another to apply it to the left side thereof, and the third to apply it to the rear side thereof, whereby by the action of the three dabbers the bag receives adhesive on three sides of its top or mouth.

30. In a packaging-machine, the combination with means for carrying filled open-mouthed bags, of a top-gumming mechanism comprising three successive dabbers, means for applying adhesive to said dabbers, and means for moving the dabbers to convey adhesive to the bags, the said dabbers constructed each with folding wings standing open to receive adhesive, and closing together to press the bag between them in applying the adhesive, and the respective dabbers adapted to apply the adhesive, one to the right side of the bag, another to the left side thereof, and the third to the rear side thereof.

31. In a packaging-machine, the combination with means for carrying filled open-mouthed bags, of a top-gumming mechanism comprising three successive dabbers, means for applying adhesive to said dabbers, and means for moving the dabbers to convey adhesive to the bags, the said dabbers constructed each with folding wings standing open to receive adhesive, and closing together to press the bag between them in applying the adhesive, and the respective dabbers adapted to apply the adhesive the one to the inner and outer surfaces of the right side of the bag, the second to the outer and inner surfaces of the left side thereof, and the third to the inner surface of the rear side thereof.

32. In a packaging-machine, the combination with means for carrying filled open-mouthed bags, of a top-gumming mechanism comprising three successive dabbers R R each constructed with folding wings *r r*, the said dabbers movable from an adhesive-receiving position with their wings extended to an adhesive-applying position, with their wings closed against the tops of the bags, mechanism for so moving the dabbers, a vessel containing adhesive, and a plunger S movable into the adhesive and out therefrom and into contact with the dabbers, said plunger having gumming plates or surfaces s' s^2 for applying adhesive to limited portions of the surfaces of the dabber R′, having surfaces s^3 s^4 for applying adhesive to limited portions of the dabber R^2, and having surface s^5 for applying adhesive to limited portions of the dabber R^3.

33. In a packaging-machine, a top-closing mechanism comprising a folder for making the first fold in the top of the package consisting of a swinging plate T, and mechanism for moving it, adapted to impart to it an advancing and swinging-down movement while it is folding in the paper, and a horizontal sliding movement while it is being retracted.

34. In a packaging-machine, a top-closing mechanism comprising a folder for making the first fold in the top of the package consisting of a swinging plate T, a slide to which said plate is hinged, movable horizontally, mechanism for advancing and retracting said slide and for swinging said folder relatively thereto, so that the folder executes a swinging-down movement while advancing to fold in the paper, and a sliding movement while retracting, and folders for completing the folding in of the top of the package.

35. In a packaging-machine, mechanisms for folding in the top of the package comprising the first folder T, a slide T′ to which it is hinged, a cam 234 and connections for imparting longitudinal movement to said slide, a link 235 engaging said folder, and a cam 240 with connections to said link for imparting swinging movements to said folder, said cams constructed and adapted to cause said folder to swing up, to advance and swing down to the horizontal while folding in the paper, and to slide out horizontally in retracting.

36. In a packaging-machine, a top-closing mechanism comprising folders for folding in the top of the bag, a supporting-plate *i* on which the bag rests during the folding operation, mounted to be vertically movable, a spring for pressing up said plate, and an adjustable stop for limiting the height to which the plate can be raised by the spring.

37. In a packaging-machine, a top-closing mechanism comprising folders for folding in the top of the bag, a supporting-plate *i* on which the bag rests during the folding operation, mounted to be vertically movable, a spring 269 for pressing up said plate, and an adjusting-screw 267 having a stop-shoulder 268 for limiting the height to which the plate can be raised by the spring.

38. In a packaging-machine, the combination with carrying-pockets N N, and a top-closing mechanism comprising as one of its elements a plunger W adapted to complete the pressing down of the top flaps, a pair of vertically-moving plungers X and Y adapted to receive the closed package between them, the upper plunger X constructed to lift sufficiently above the package during the movement of the package beneath it to clear said flaps, and movable down upon the package to again press down said flaps, and the plungers X and Y movable simultaneously to carry the package out of the pocket, and mechanism for so moving them.

39. In a packaging-machine, the combination with carrying-pockets and a top-closing mechanism, of a conduit A′, vertically-moving plungers X and Y adapted to receive the closed package in the pocket between them, and movable simultaneously to expel said package from the pocket, and a pusher Z movable to thrust the package from between said plungers and enter it into said conduit.

40. In a packaging-machine, the combination with carrying-pockets and a top-closing mechanism, of a conduit A′, vertically-moving plungers X and Y adapted to receive the closed package in the pocket between them, and movable simultaneously to expel said package from the pocket, and carry it to the level of said conduit, said conduit formed with a top plate *m* extending closely adjacent

to the position assumed by the top plunger X after said movement, and a pusher Z movable to thrust the package from between said plungers and enter it into said conduit, whereby in this movement the top flaps of the package are confined by said top plate on passing out from under said plunger.

41. The combination of pockets N N, vertically-moving plungers X Y, and horizontally-moving pusher Z, said plungers adapted to expel packages from the pockets by a vertical movement, and said pusher adapted to expel the package from between said plungers by a horizontal movement.

42. The combination with pockets N N of vertically-moving plungers X Y movable downward simultaneously, horizontally-movable pusher Z, the slides for the plunger Y and pusher Z constructed the former to one side of the path of the pusher when the plunger is elevated, and the latter to one side of the path of the plunger when the pusher is advanced, and driving mechanism for the plungers and pusher adapted to first move the plungers downward simultaneously, then advance the pusher between the plungers, then elevate the plungers, and finally retract the pusher.

43. The package-drying conveying-conduit A′ consisting of a trunk, an endless conveyer-belt mounted to travel along the bottom of said trunk, and an endless belt mounted to travel at the same speed along the top of said trunk, and means for elastically pressing said top belt downwardly upon the tops of the packages, consisting of a series of rollers p', a movable frame t carrying said rollers, and springs t^2 pressing said frame downwardly.

44. In a packaging-machine, the combination with pockets N N and a stationary table O over which they move, of brushes 325 between the pockets arranged to sweep over said table.

In witness whereof I have hereunto signed my name in the presence of two subscribing witnesses.

HENRY E. SMYSER.

Witnesses:
ARTHUR C. FRASER,
JAMES J. FROST.