US00D623641S

(12) United States Design Patent

Harden et al.

(10) Patent No.: US D623,641 S

(45) Date of Patent: ** Sep. 14, 2010

(54) **CRADLE DEVICE**

(75) Inventors: **Daniel K. Harden**, Palo Alto, CA (US); **Christopher L. Whittall**, Los Gatos, CA (US); **Andrew R. Church**, Oakland, CA (US)

(73) Assignee: **Cisco Technology, Inc.**, San Jose, CA (US)

(**) Term: **14 Years**

(21) Appl. No.: **29/352,373**

(22) Filed: **Dec. 19, 2009**

(51) **LOC (9) Cl.** **14-03**

(52) **U.S. Cl.** **D14/253**

(58) **Field of Classification Search** ..... D14/138 R, D14/140, 142, 217–218, 240, 250–253, 299, D14/434, 452, 454, 447, 147–150; D8/355, D8/363, 373, 380; D12/415, 425; 248/206.2–206.4, 248/220.21, 279.1, 121, 131, 157; 379/426, 379/446, 454, 455, 449; 224/571; D6/466, D6/467; D13/107–108; 320/113

See application file for complete search history.

(56) **References Cited**

U.S. PATENT DOCUMENTS

D348,062	S	*	6/1994	Iseli et al.	D14/149
D352,282	S	*	11/1994	Toh et al.	D14/150
D365,102	S		12/1995	Gioscia	
D368,892	S	*	4/1996	Tanaka	D13/108
D369,163	S	*	4/1996	Leung et al.	D14/150
D381,634	S		7/1997	Yanku	
D385,541	S		10/1997	Taylor	
D394,266	S		5/1998	Hogenbirk	
D395,281	S	*	6/1998	Waldner	D13/108
D395,312	S		6/1998	Parsadayan et al.	
D406,142	S		2/1999	Meurer	
D423,509	S		4/2000	Park	
6,049,192	A	*	4/2000	Kfoury et al.	320/113
D426,232	S		6/2000	Silbermann et al.	
D426,808	S	*	6/2000	Hsiao	D13/107
D427,966	S	*	7/2000	Foster et al.	D13/107
D430,861	S		9/2000	Lytel	
D437,310	S		2/2001	Gioscia	
D451,498	S	*	12/2001	Rossel	D14/218
D454,332	S	*	3/2002	Yokoyama	D13/108
D458,250	S		6/2002	Kim et al.	
D472,235	S		3/2003	Chen	
D473,220	S		4/2003	Smith et al.	
D475,346	S	*	6/2003	McCurrach et al.	D13/108
D478,074	S	*	8/2003	Lam	D14/253

(Continued)

OTHER PUBLICATIONS

Panasonic KX-TGA670B, <URL:http://www.101phones.com/details/1991-229/panasonic-kx-tga670.html>, retrieved from internet Apr. 20, 2010.*

(Continued)

Primary Examiner—Robert M Spear
Assistant Examiner—Carla Jobe Wright
(74) *Attorney, Agent, or Firm*—Patent Capital Group

(57) **CLAIM**

The ornamental design for a cradle device, as shown and described.

DESCRIPTION

FIG. **1** is a top perspective view of a cradle device showing our new design;

FIG. **2** is a front view thereof;

FIG. **3** is a back view thereof;

FIG. **4** is a side view thereof;

FIG. **5** is another side view thereof;

FIG. **6** is a top view thereof; and,

FIG. **7** is a bottom view thereof.

The broken lines immediately adjacent shaded surfaces represent the boundaries of the claimed design. All other broken lines are directed to environment. The broken lines and unshaded regions within the broken lines form no part of the claimed design.

1 Claim, 5 Drawing Sheets

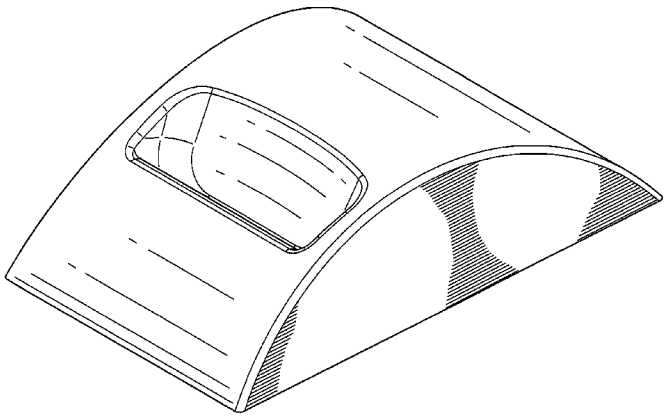

U.S. PATENT DOCUMENTS

D483,353	S		12/2003	Hyogo	
D485,827	S		1/2004	Olson et al.	
D491,922	S		6/2004	Poulet	
D501,205	S	*	1/2005	Quinn	D14/253
D516,022	S	*	2/2006	Winkler	D13/108
D517,532	S		3/2006	Chen	
D527,370	S	*	8/2006	Wong	D14/147
D530,273	S	*	10/2006	Solland	D13/108
D531,136	S		10/2006	Schoenert et al.	
D531,993	S		11/2006	Choi et al.	
D532,746	S	*	11/2006	Meyers et al.	D13/108
D534,489	S	*	1/2007	Klein et al.	D13/108
D534,502	S		1/2007	Poulet et al.	
D541,245	S		4/2007	Fiorio	
D545,319	S	*	6/2007	Griffin	D14/434
D549,707	S	*	8/2007	Depay	D14/434
D550,211	S		9/2007	Ikeda et al.	
D563,948	S		3/2008	d'Hoore	
D566,667	S		4/2008	Whittaker et al.	
D566,668	S		4/2008	Whittaker et al.	
D568,809	S	*	5/2008	Izumo et al.	D13/108
D571,743	S		6/2008	Tu	
D571,788	S	*	6/2008	King et al.	D14/217
D575,316	S		8/2008	Liu et al.	
D577,693	S		9/2008	King et al.	
D579,871	S		11/2008	Hsiau	
D583,366	S		12/2008	Chen	
D587,707	S		3/2009	Maiers et al.	
D590,395	S		4/2009	Heggkand	
D595,705	S	*	7/2009	Houdek, II	D14/240
D598,436	S		8/2009	Tseng	
D606,034	S		12/2009	Suzuki	
D611,462	S		3/2010	McGuire	

OTHER PUBLICATIONS

GE / RCA ViSYS H5450RE3-R, <URL:http://www.101phones.com/details/15753-5126/ge-rca-h5450re3.html>, retrieved from internet Apr. 20, 2010.*

U.S. Appl. No. 29/352,370, filed Dec. 19, 2009, entitled "Set-Top Unit," Inventor(s): Daniel K. Harden et al.

U.S. Appl. No. 29/352,371, filed Dec. 19, 2009, entitled "Camera Assembly," Inventor(s): Daniel K. Harden et al.

U.S. Appl. No. 29/352,372, filed Dec. 19, 2009, entitled "Handset," Inventor(s): Daniel K. Harden et al.

U.S. Appl. No. 29/352,374, filed Dec. 19, 2009, entitled "Handset," Inventor(s): Daniel K. Harden et al.

* cited by examiner

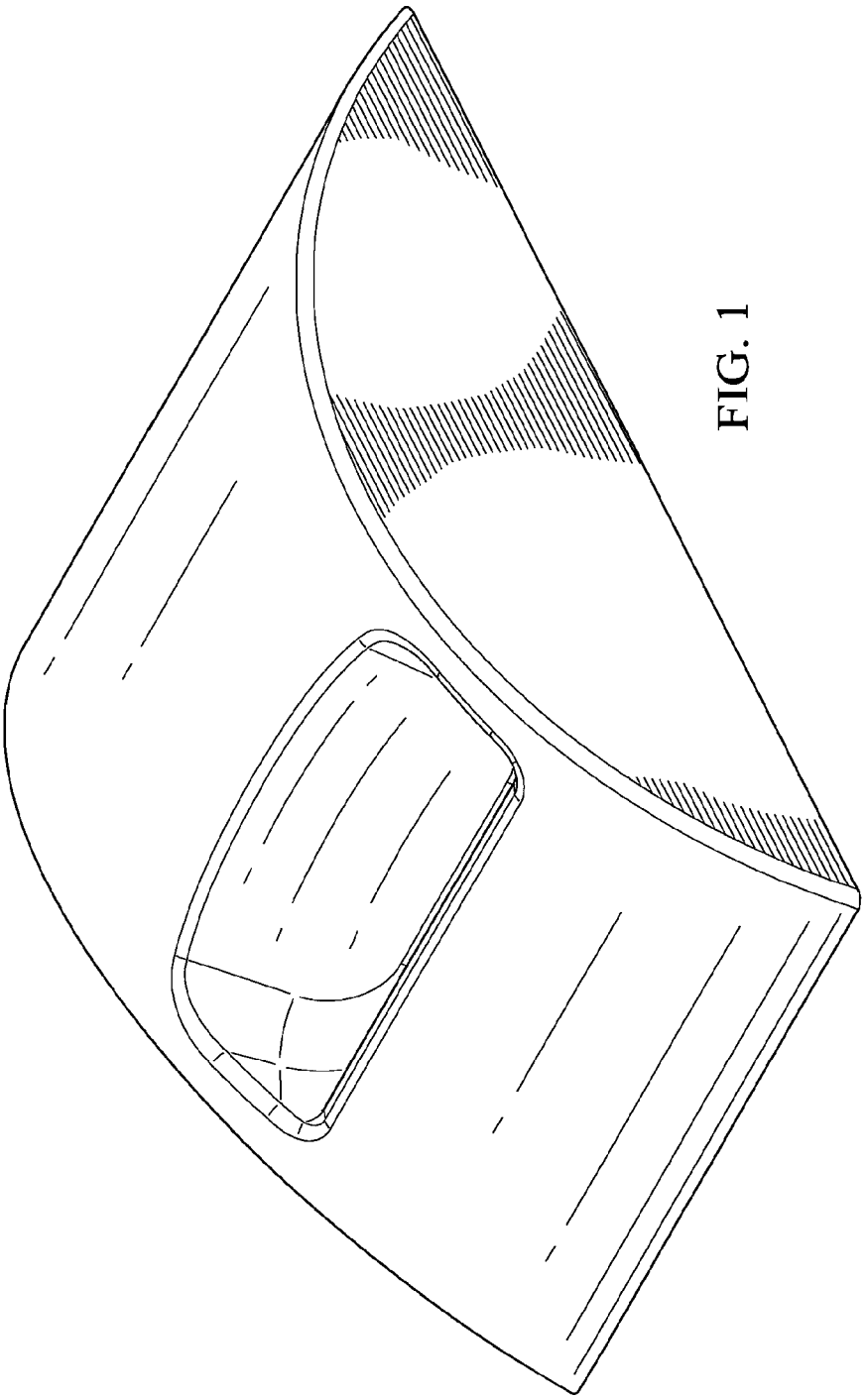

FIG. 1

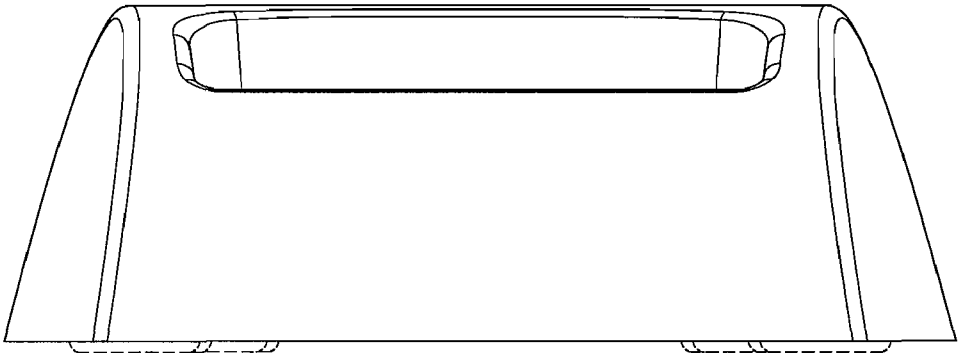

FIG. 2

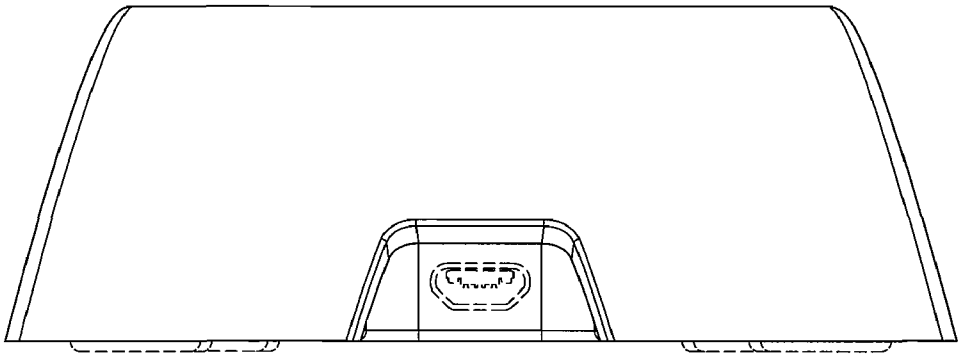

FIG. 3

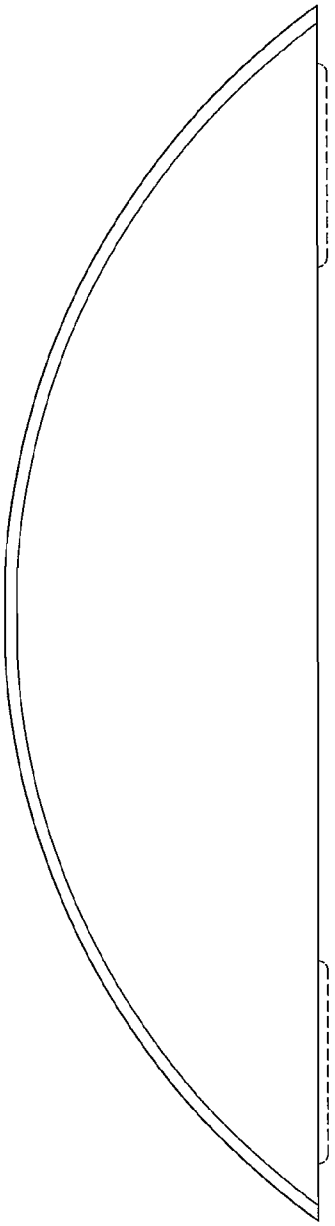

FIG. 4

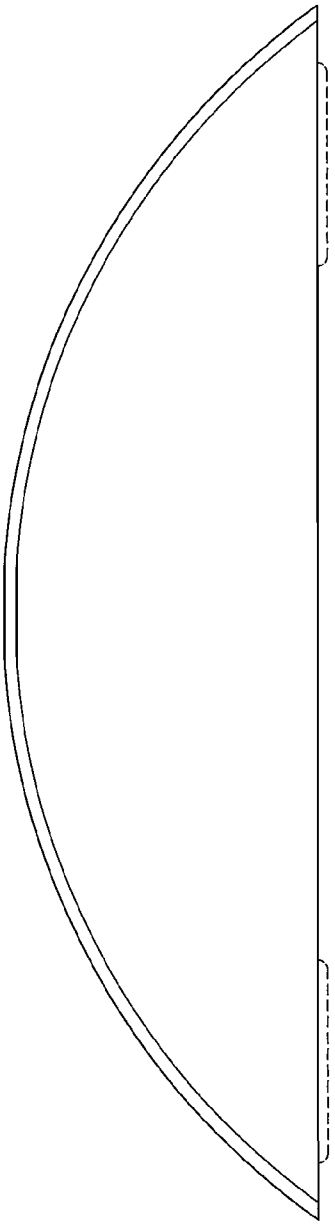

FIG. 5

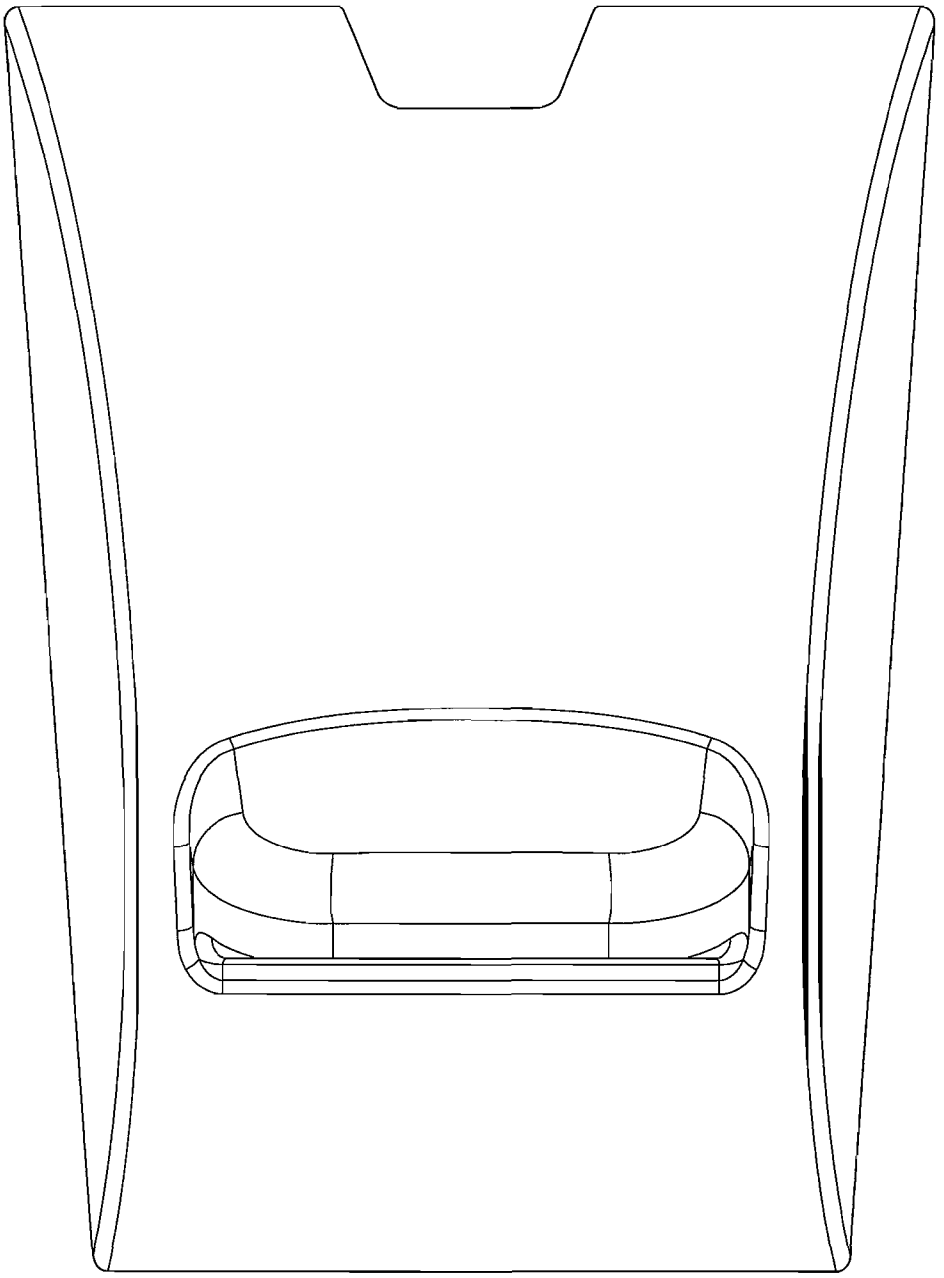

FIG. 6

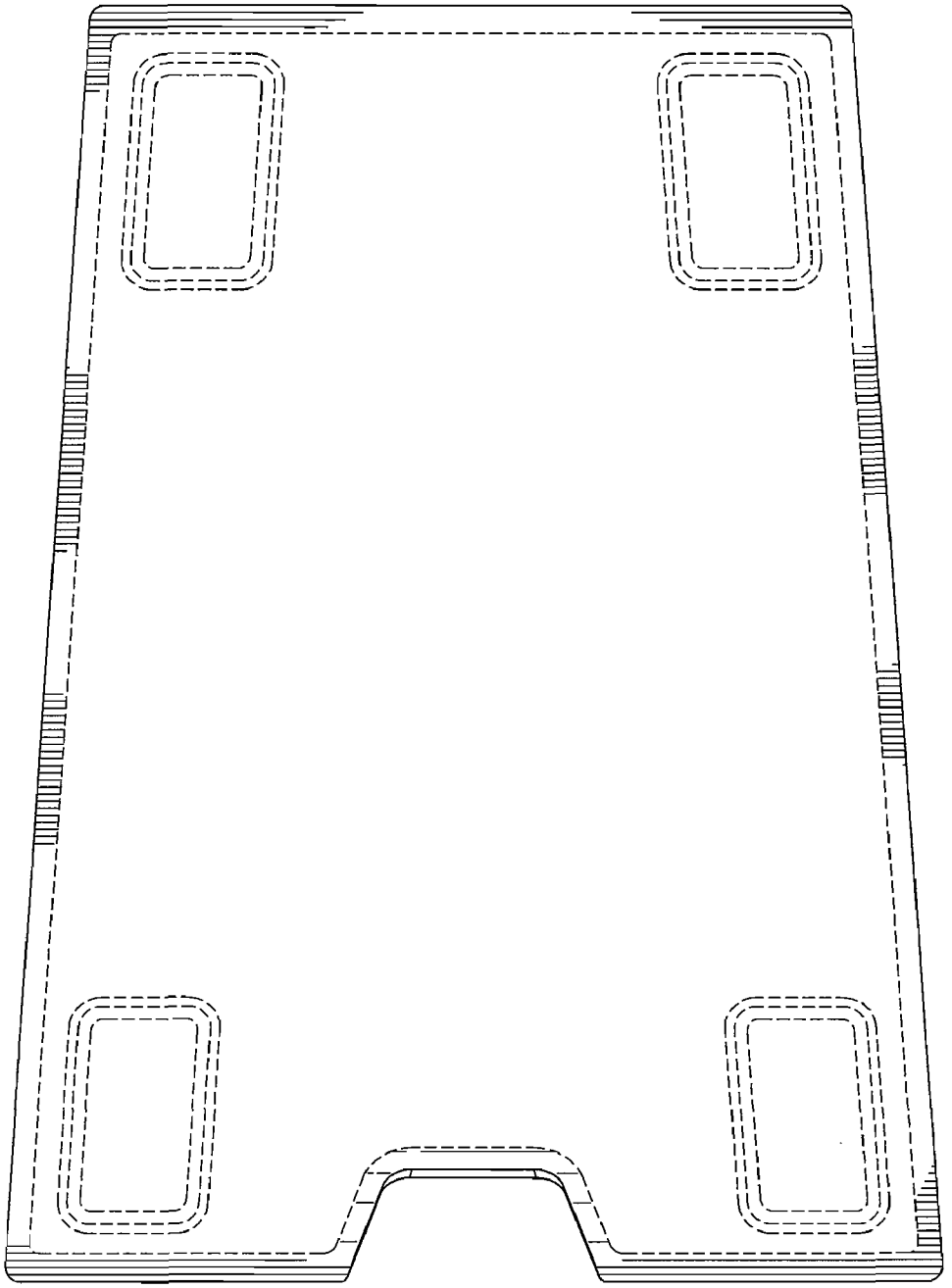

FIG. 7