UNIVERSAL CONNECTOR FOR CABLE CONDUCTORS

Filed Jan. 4, 1971 3 Sheets-Sheet 1

FIG. 2

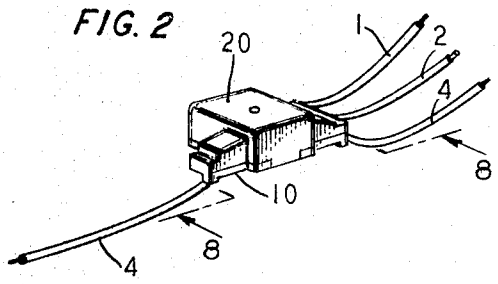

FIG. 1

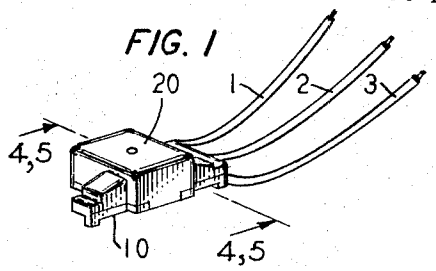

FIG. 3

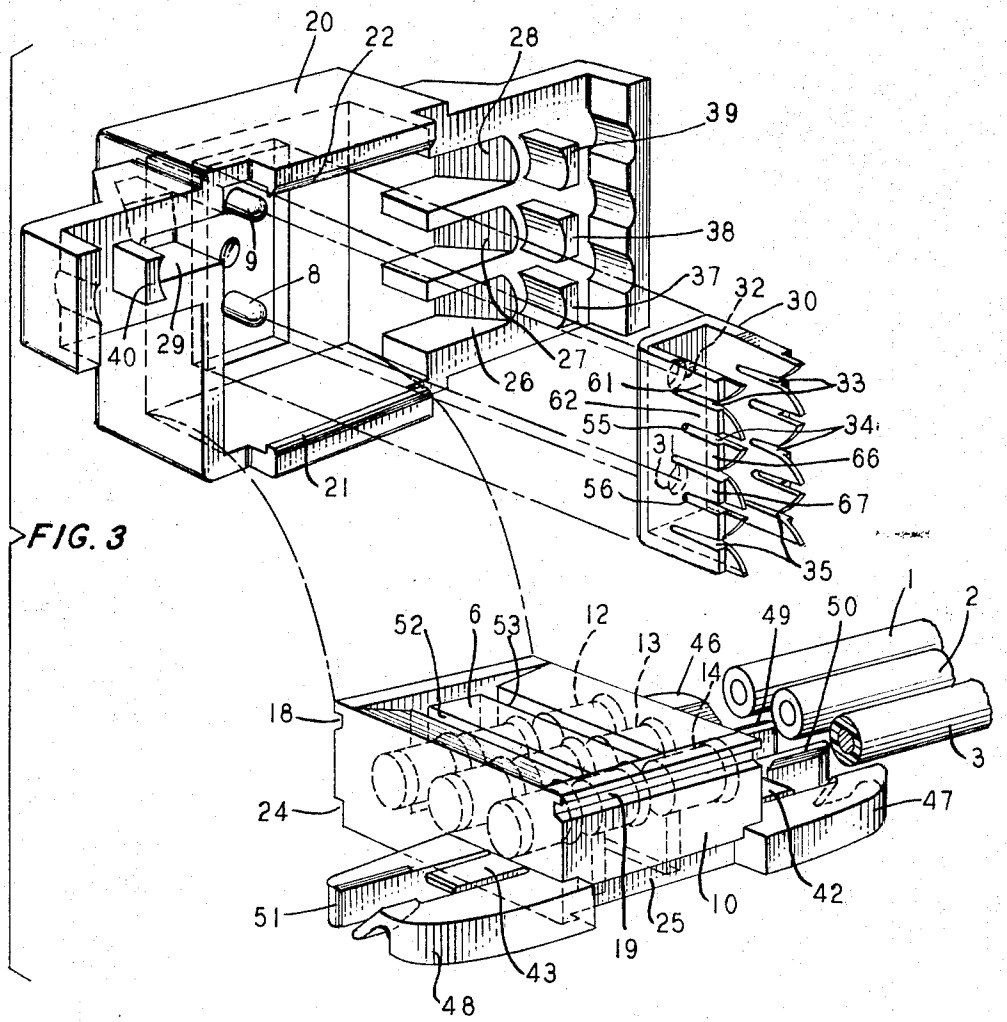

INVENTOR
J. P. PASTERNAK
BY
Harry Newman
ATTORNEY

UNIVERSAL CONNECTOR FOR CABLE CONDUCTORS

Filed Jan. 4, 1971 3 Sheets-Sheet 2

FIG. 4

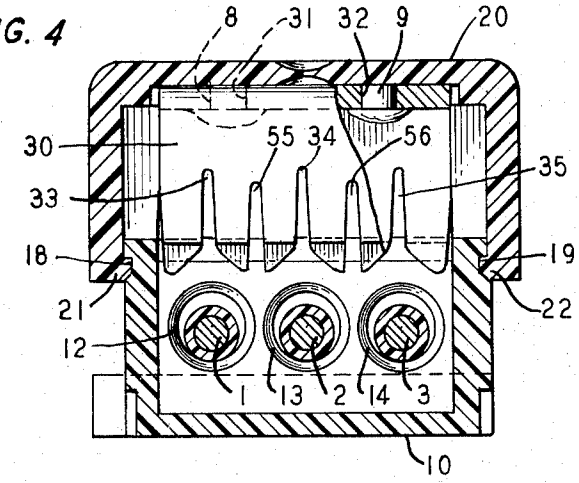

FIG. 5

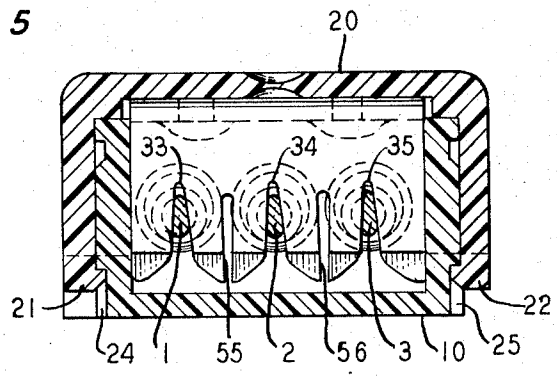

FIG. 6

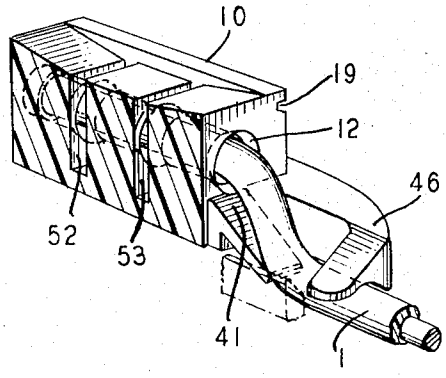

UNIVERSAL CONNECTOR FOR CABLE CONDUCTORS

Filed Jan. 4, 1971 3 Sheets-Sheet 3

FIG. 7

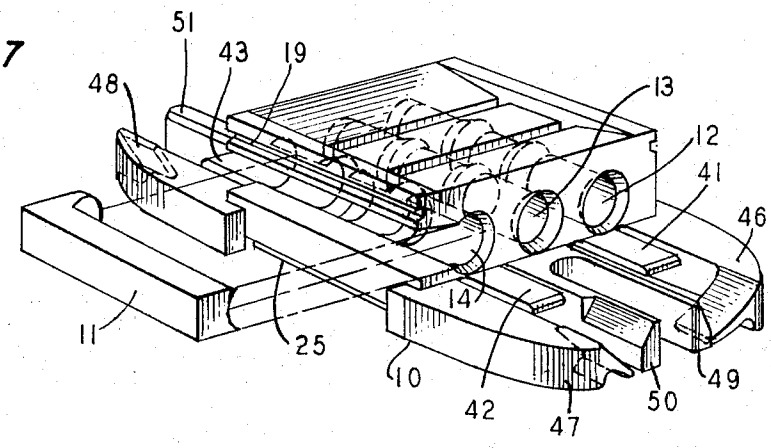

FIG. 8

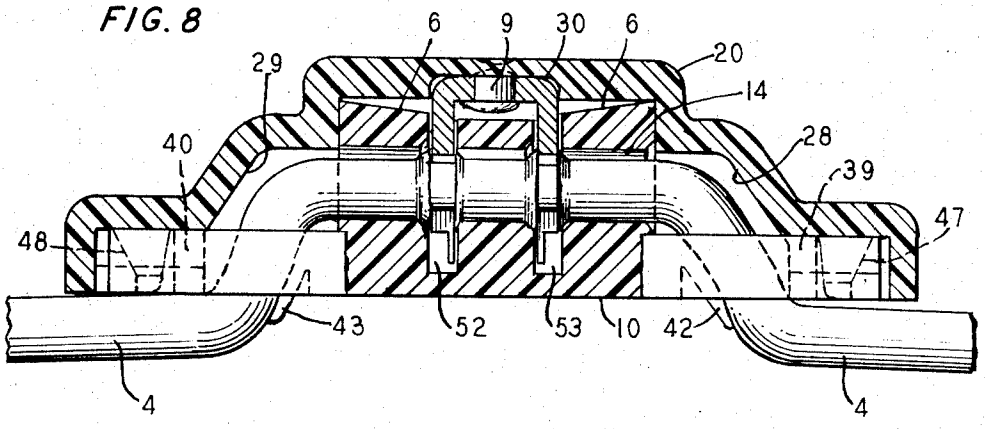

FIG. 9

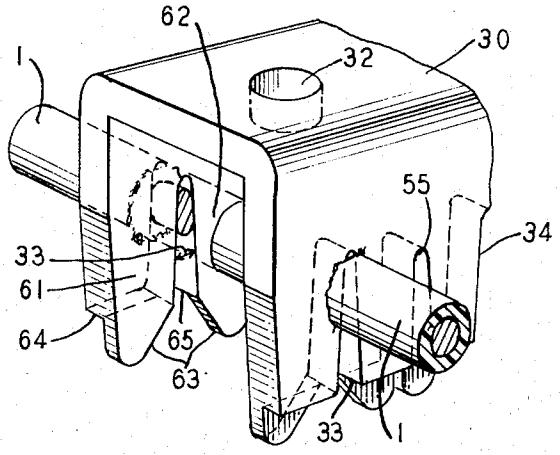

United States Patent Office

3,718,888

Patented Feb. 27, 1973

1

3,718,888

UNIVERSAL CONNECTOR FOR CABLE CONDUCTORS

John Paul Pasternak, Plainfield, N.J., assignor to Bell Telephone Laboratories, Incorporated, Berkeley Heights, N.J.

Filed Jan. 4, 1971, Ser. No. 103,687
Int. Cl. H01r 11/20
U.S. Cl. 339—98 10 Claims

ABSTRACT OF THE DISCLOSURE

An electrical connector is disclosed having a capability for both butt-splicing and bridge-splicing a plurality of insulated wires with solderless connections. The connector includes a metallic contact containing a plurality of tapered slots, the sidewalls of which are formed to pierce the insulation on the wire. The portion of the contact at the entrance to the slots is formed into a shoulder transverse to the axis of the slots. As a result, when insulated wires are forced into the slots of the contact, the insulation is pierced, the shoulder holds the insulation to prevent it from being drawn into the slot, and positive electrical contact is established between the conductors of the wires and the metallic contact. A retainer is also provided to hold the wires in place prior to being forced into the slots and to provide mechanical support for the wires after the connection is made.

BACKGROUND OF THE INVENTION

This invention relates to solderless electrical connectors, and particularly to such connectors as are adapted for permanently splicing together insulated wires. A typical application for such connectors is in the splicing of plastic-covered copper or aluminium wire at telephone cable junctions.

A solderless connector of this type generally includes three main parts: a base, a contact, and a cover. The base is an insulating piece having tunnels or channels into which the wires to be interconnected are inserted. The cover is also an insulator and is arranged to substantially enclose the base. The contact is a conductive metallic piece having a plurality of wire receiving slots cut into it. The pressing action of mating the base and the cover together is arranged to force the wires into the slots in the contact. The side walls of the slots have a configuration for piercing the insulation on the wires, making contact with the conductors of the wires, and thereby interconnecting the conductors of the various wires through the contact piece.

In the past, these connectors have been used with insulated wire having a copper conductor. Good mechanical connections were obtained that were able to retain a low resistance despite mechanical stresses, repeated temperature changes or pressure changes, exposure to moisture, and the passage of electrical current. The necessity for stripping insulation from the wires to be terminated was precluded by the ability of the connector to penetrate the insulation and make positive metal-to-metal contact. Furthermore, copper oxidizes rather slowly. As a result, it was not necessary to seal the solderless connector to prevent degradation of the termination due to oxide formation. Since these connectors were also adaptable to mechanization, a high installation rate was obtained with a resulting low cost.

Copper has now become in short supply and accordingly become relatively expensive. For this reason in particular, consideration has recently been given to using aluminum to replace the copper conductor in insulated wire. Aluminum is abundant, relatively inexpensive, and

2

lightweight. It also has electrical properties close to those of copper. The mass conductivity of aluminum is more than twice that of copper. Aluminum's volume conductivity, however, is only approximately two-thirds that of copper. As a result, a copper conductor will weigh twice as much as an aluminum conductor of the same physical size, yet the conductance of the aluminum conductor will be only approximately 60% that of the copper conductor. Therefore, while an aluminum conductor having the same current carrying capacity as a copper conductor will only weigh half as much, it will also be slightly larger physically.

For example, to use an EC grade aluminum conductor to replace a copper conductor, while maintaining the same conductance, the aluminum conductor must be 2 AWG sizes larger than the copper conductor it replaces. Of course, any connector designed for use with aluminum conductors should retain all the advantages of connectors designed for copper conductors, and, in fact, should also be suitable to connect to aluminum or copper conductors with equal facility. At the same time, such a connector must be capable of coping with the special problems presented by aluminum conductors.

An oxide film forms on an aluminum surface within seconds after bare metal is exposed. The film will normally attain a thickness of from 60 to 100 angstroms, but may reach as high as several thousand angstroms under conditions of extremely high humidity and temperature. The oxidation of aluminum is self-limiting because the film's density, amorphous nature, and low ionic conductance prevent progressive oxidation. Electrical contact with an aluminum conductor is relatively poor through the oxide since the dense, inert aluminum oxide surface film is non-conducting. Before a good electrical joint can be made, the oxide film must be removed or penetrated so that bare metal surfaces will be in intimate contact with one another.

The aluminum oxide surface film is brittle and so will not follow the plastic deformation of the underlying aluminum conductor. However, the film will fracture at points of high stress and deformation, allowing bare metal surfaces to be exposed. This means that where localized stress is applied to an aluminum wire, the oxide film may be fractured and effective electrical contact established. Since aluminum is particularly subject to creep or cold flow, this contact stress will eventually be accommodated by movement away from the stressed area. The rate of creep increases with temperature and is noticeably higher for aluminum than it is for copper. Thus, the contact pressure of a connector decreases more rapidly for an aluminum conductor than it does for a copper conductor. As a result, the critical level at which contact degradation occurs is reached much sooner with aluminum than it is with copper.

Beyond the problems created by the presence of the skin of aluminum oxide, aluminum conductors do not have the mechanical strength that copper conductors have. Since aluminum has a much lower yield strength than copper, only approximately 40%, and since aluminum is relatively notch sensitive, the aluminum conductor wire must be mechanically supported to prevent fracture of the aluminum conductor at the joint resulting from any external stressing of the connected wires. This is a particular problem when a connector capable of piercing the plastic wire insulation is contemplated. In order to pierce the insulation and penetrate the underlying oxide coating, the aluminum conductor must be deformed and extruded. This flattens or notches the conductor at the termination joint, giving it a reduced cross-sectional width that greatly weakens the aluminum and makes it particularly susceptible to mechanical failure.

Since aluminum conductors extrude so readily, particular care must be taken to prevent any undesirable type of extrusion due to the presence of surface irregularities or burrs at the entrances to the slots in the contact piece. Also since the aluminum has a low yield strength, any over-extrusion of the conductor at the entrance to the contact slot reduces the intimate metal-to-metal and electrically conductive contact between the conductor and the sidewalls of the slot in the mated connector. This loss of intimate contact creates an unworkable and unstable connection because the resulting low pressure between the slot sidewalls and the conductor permits air to react with the surface of the bared aluminum conductor and reoxidize it at the joint.

Another problem arises where tough plastic insulation is used over aluminum conductors, such as polypropylene. The toughness of this material may require such a high contact pressure to pierce the insulation that the yield strength of the aluminum conductor is exceeded. As a result, piercing the insulation may extrude the aluminum conductor without establishing electrical contact.

This problem is aggravated where it is desired to use a single size connector on a wide range of wire gauges. The width of the slot must be less than the diameter of the smallest conductor contemplated. For large conductor wires an excessive pressure may thereby result. If the slot width is increased to avoid this problem, the piercing pressure will then be too low for small diameter wires. This will result in the insulation not being completely pierced. Because of this, a layer of insulation will remain between the conductor and the contact of the connector and electrical contact will not be established. The performance of a termination is determined by the contact resistance of the joint interface. Since aluminum oxide is essentially nonconductive, the presence of an oxide coating at the interface decreases the effective contact area available to carry current. This increased contact resistance could impair transmission. Since aluminum has a greater tendency to oxidize than copper, a practical termination must overcome this problem while accommodating the lower mechanical properties that aluminum has. The special problems of terminating aluminum conductor wire have been a deterrent to the widespread use of aluminum.

Not only is it necessary to establish an initially low resistance termination, but also to preserve the stability of even the best joint. Accordingly, the termination or joint interface must be sealed to prevent air from entering the interface and surrounding bored conductor to oxidize the aluminum. Otherwise, as stress is relieved with time and the contact pressure decreases oxidation can occur as relative movement due to temperature changes and the difference in thermal expansion causes areas of aluminum to be exposed.

Another important factor affecting the electrical stability of a termination is the effect of daily or seasonal temperature changes. Since different conductor metals expand and contract at varying rates, relative movement between contacting members of different metals occurs with temperature changes. A joint that initially has a low resistance may develop a much higher resistance when heated or cooled, yet may still return to a low resistance when the initial temperature returns. For example, when an aerial cable is terminated on a telephone pole, the temperature inside a termination closure may reach 140° F. A sudden thunderstorm may cause wind-driven rain to plunge the temperature to 70° F. in minutes. This rapid change in temperature causes a conductor to move relative to any other metal which it contacts.

This relative movement resulting from temperature fluctuations may cause an initially low resistance termination to become a high resistance termination. This occurs where the movement of the aluminum conductor brings a portion of the oxide coating into contact with the connector. A subsequent change in temperature may again cause contact to be established with a portion of the aluminum conductor. The intermittent nature of such an unstable termination would generate as much transmission difficulty as a continuous high resistance termination, yet in some ways be even more of a problem. A high resistance termination can be readily found by testing, but an unstable termination is frequently within test limits whenever a test is performed, yet will generate customer complaints due to the instability of the termination. Further, if the termination is not sealed, an unstable termination will progressively deteriorate with time since the relative movement will expose the initially clean aluminum to the air which causes it to oxidize.

Differences in thermal expansion rates of other materials used with aluminum can aggravate the cold flow problem. For example, if an aluminum to copper joint is heated, the aluminum expands at a rate 40% to 45% greater than that of copper. If the mechanical stresses increase until the elastic limit of the aluminum is exceeded, plastic deformation will occur. When the joint is subsequently cooled, the contact area of the aluminum and the contact pressure are reduced. Again, this permits the formation and penetration of an oxide film into the contact area.

One of the most common methods for terminating aluminum conductor wire, up until now, has been by crimping. Here the two conductor wires to be terminated are stripped and the stripped ends inserted into a hollow sleeve. The sleeve is then crimped by a tool with sufficient force to cause plastic flow at the interior of the termination. To avoid the necessity for stripping the wire ends prior to termination, a second method was used where the sleeve was punched after being inserted over the insulated wire ends. The punching pierced the insulation and established contact between the wire ends and the sleeve. This second method, however, is generally limited to wire with paper insulation. Few embodiments of the punching operation are effective to pierce plastic insulation and establish contact with the underlying conductor.

Since telephone cables are designed for a minimum serviceability life span of forty years, it is apparent that a stable joint is a necessity. Also, since wire joints and terminations must be connected in series, a high reliability, low resistance joint is essential to meet transmission criteria. A connector with initially low resistance is not sufficient unless the low resistance can be maintained for a long period of time in the presence of temperature changes and the application of mechanical stresses. The desirability for providing a solderless connector capable of connecting aluminum wires is clear. The advisability for making such a connector compact, inexpensive and simple to use is also clear. Although such connectors have been designed for use with copper conductors, up until now attempts to apply such devices for aluminum conductors have been precluded by the special requirements dictated by the peculiar properties of aluminum.

Solderless connectors have been known and used for some time. An example of a connector adapted for butt-splicing, or connecting together several wire ends, is U.S. Pat. No. 3,012,219, issued Dec. 5, 1961, to E. J. Levin et al. An example of a connector adapted for bridge-splicing, or connecting wire ends to a continuous wrie, in U.S. Pat. No. 3,118,715, issued Jan. 21, 1964, to R. A. Potruch. Although devices such as these are effective when used to splice wires having copper conductors, the foregoing shows that different technical considerations are involved in splicing aluminum conductor wire.

It is therefore an object of my invention to prevent the increased resistance between solderless connectors and aluminum conductors of insulated wires by piercing the oxide layer of the conductor and preventing the subsequent formation of an oxide coating between the side walls of the contact and the conductor.

It is a further object of my invention to control extrusion of the aluminum conductor at the entrance to the slots in the metallic contact of these connectors, thereby preventing connections in which an air gap exists between the side walls of the contact and the conductors of the wires, thereby maximizing the effective contact area between the conductor and the contact.

Still another object of my invention is to prevent the formation of an insulation film between the side walls of the contact and the conductors by restraining the insulation from being drawn down into the slots in the contact.

Yet another object of my invention is to permit a single connector to be used interchangeably for either butt-splicing or bridge-splicing.

It is also an object of my invention to provide mechanical support to the wires leading from the connector and prevent mechanical failure due to tensional or torsional stresses applied to the wires.

It is still a further object of my invention to permit a single connector to be used interchangeably for a variety of wire sizes.

SUMMARY OF THE INVENTION

In an illustrative embodiment of my invention, the connector includes a base, a cover, and a contact containing a plurality of inwardly tapering slots, the entrances of which include a shouldered portion transverse to the aixs of the slots. A plurality of wires to be interconnected is inserted into tunnels in the base where they are held in position. To prevent mechanical failure of the termination joint due to the brittleness of the aluminum conductors and the resultant weakness at the joint, the wires are supported by the base against torsional or tensional stresses which may be applied to the wires. The interconnection of the plurality of wires is accomplished by forcing the cover over the conductive metallic contact where it mates with the base. This causes the wires to be forced into the slots in the contact, pierces the insulation, and establishes an electrical connection between the contact of the connector and the conductors of the wires. The body of the connector is adapted to butt-splice a plurality of wire ends and is readily converted to bridge-splicing one or more wire ends to a continuous wire.

BRIEF DESCRIPTION OF THE DRAWINGS

FIG. 1 is a perspective view of an assembled connector shown butt-splicing three wire ends together.

FIG. 2 is a perspective view of an assembled connector showing two wire ends bridge-spliced to a through going wire.

FIG. 3 is an exploded perspective view showing the elements of the connector arranged for butt-splicing.

FIG. 4 is a cross-section of the connector shown prior to the interconnection of the wires.

FIG. 5 is a cross-section of the connector shown with the base and cover mated and the wires interconnected.

FIG. 6 is a perspective view of a practical cross-section of the connector base showing a wire end in place for a splice.

FIG. 7 is a partially exploded perspective view of the connector base showing the base adapted for use as a bridge-splice connector.

FIG. 8 is a partial cross-section of the connector shown in FIG. 2.

FIG. 9 is a perspective of the contact of the connector showing a wire in its connected position.

DESCRIPTION OF THE ILLUSTRATIVE EMBODIMENT

A solderless connector embodying my invention is shown in FIGS. 1 through 9. FIG. 1 shows the connector used to butt-splice three wire ends **1**, **2** and **3** together. The same connector is shown in FIG. 2 adapted to be used

for bridge-splicing two wire ends **1** and **2** to a through wire **4**. The basic parts of the connector, shown clearly in an exploded perspective view in FIG. 3, are a base **10**, a cover **20**, and a contact **30**.

Base **10** includes three wire tunnels **12**, **13** and **14** into which wire ends **1**, **2** and **3** are respectively inserted. The entrances to the tunnels are beveled to prevent the wire ends from catching on the edge of the entrances, or "hanging up," which would prevent the wire end from being inserted all the way into the tunnels. The tunnels are blind, or closed at the far end, and it is desirable that the wire ends "bottom" against the end of the tunnels. Once inserted, the wires must be retained in the tunnels of the base to prevent the wires from "backing out" of the tunnels as a result of subsequent handling.

The means for retaining the inserted wires is clearly illustrated in FIG. 6. After wire end **1** is fully inserted into tunnel **12**, the free end of the wire is drawn down against retainer tab **41** and then looped under snubber **46**. As a result of the offset in the axis of wire **1**, and because of the resiliency of retainer tab **41**, a restraining force is exerted against wire **1**. The effect of this restraining force is to grip wire end **1** between retaining tab **41** and snubber **46** and prevent wire end **1** from backing out of tunnel **12**. This insures that once inserted into one of tunnels **12**, **13** or **14**, a wire end will stay bottomed against the end of the tunnel.

The connector is shown in cross-section in FIG. 4 as it would be shipped from the manufacturer, except wire ends **1**, **2** and **3** which are shown in place in tunnels **12**, **13** and **14** are naturally, not shipped with the connector assembly. Pins **8** and **9** of cover **20** are inserted through holes **31** and **32** respectively of contact **30**. This is shown more clearly in FIG. 3. The pins are then headed over to secure contact **30** to the inside of cover **20**. Cover **20** is equipped with lips **21** and **22** on either side which are designed to snap into position in matching grooves **18** and **19**, respectively, in base **10**, thereby latching the base and cover together. As soon as wire ends **1**, **2** and **3** are inserted respectively in tunnels **12**, **13** and **14**, the wire ends are ready to be interconnected.

To interconnect the wire ends **1**, **2** and **3**, cover **20** and base **10** are pressed together. This forces lips **21** and **22** of cover **20** out of grooves **18** and **19** in base **10** and permits the base and cover to mate. In the mated position, lips **21** and **22** of cover **20** lock into position in grooves **24** and **25** respectively of base **10**. At the same time, the mating of the base and the cover forces the inserted wires into slots **33**, **34** and **35** of contact **30**. As FIG. 2 shows clearly, contact **30** is U-shaped and each leg of the U is slotted. A slot **33** appears in both legs, for example. The primary function of the double slots is the increased reliability resulting from the redundancy.

The details of contact **30** are shown enlarged in FIG. 9. Slot **33** in contact **30**, which is representative of slots **34** and **35** as well, has an inwardly tapering shape. The sides of the slot in the far leg of the U-shaped contact **30** are defined by posts **61** and **62**. The function of the continuously tapered slot is to prevent the conductor of wire **1** from being so extruded by any imperfection or burr at the entrance to slot **33** that positive contact between the conductor and the sidewalls of the slot could not be made when the wire is fully in place in the slot. This permits relatively inexpensive manufacturing methods to be used to fabricate the contact since nominal variations in the degree of taper of the slot sidewalls or moderate burrs and irregularities around the slot entrance area will have little effect on the integrity of the resulting connection.

Posts **61** and **62** include a chamfered entrance **63** which insures that the entering wire is properly positioned in the center of slot **33**. At the juncture of chamfered entrance **63** and slot **33**, posts **61** and **62** are formed into shoulders **64** and **65**, respectively. As explained previously, a particular problem exists where tough plastic

insulation is used over an aluminum conductor. The function of shoulders **64** and **65** is to present a large area to grip the insulation as the wire is forced into slot **33**. As a result, the insulation is stripped away from the conductor without overly extruding the conductor. This is necessary to prevent a thin skin of insulation from being drawn down into the slot with the conductor, preventing intimate contact between the slot sidewalls and the conductor. The action of the shoulders causes the insulation to part at the connector leg. The parted insulation then elastically snaps back sufficiently to leave the area of slot **33** free of insulation.

Another feature of the structure of contact **30** is perhaps best shown in FIG. 3. Between the adjacent wire slots **33**, **34** and **35** are spacer slots **55** and **56**. For example, between post **62** (which together with post **61** defines wire slot **33**) and post **66** (which together with post **67** defines wire slot **34**) is a spacer slot **55**. Spacer slot **55** permits post **62** to be deflected from its initial position by a wire being forced into wire slot **33**, and for post **66** to be deflected from its initial position by a wire being forced into wire slot **34**, or for both posts to be so deflected. If spacer slot **55** were not present, as is true in prior art connectors, then forcing a wire into both slots **33** and **34** would not deflect the portion of the contact between them from its initial position because the forces on each side would be equal. As a result, as the conductor creeps with time, the sidewall pressure could not be maintained because the portion of the contact between the adjacent slots would have no stored energy due to elastic deflection. By contrast, posts **62** and **66** retain full resiliency because the presence of wires in adjacent slots does not prevent their full deflection. This insures that as the stress relaxes with time, due to cold flow or creep of the aluminum conductor, the maximum retained stress of the deflected posts will maintain sufficient pressure against the conductor to insure a low resistance joint.

Since it is so desirable to have the connector universally applicable, it is designed to readily convert from a butt-splicing connector to a bridge-splicing connector. This feature is readily seen in FIG. 7 where removable plug **11** is shown broken away from base **10**. Tunnel **14** in base **10** is now no longer a blind tunnel but has its side and other end open. This permits base **10** to be readily installed over a through wire, even a wire already wired into service. The through wire would be held by retaining tabs **42** and **43** in concert with snubbers **47** and **48** at respective ends of tunnel **14** in a manner similar to that described previously relative to tunnel **12**. It is also apparent in FIG. 7 that similar retaining means are not provided for tunnel **13**. The retaining force exerted on a wire inserted in tunnel **13** results from the restriction caused by torsional stops **49** and **50**, whose major function will be explained in more detail later. It should be clear that the retaining force exerted on a wire in tunnel **13** is minimal for anything other than a large gauge wire. However, this is of little consequence since all other wires are firmly retained, leaving the craftsman only a single wire to "juggle."

Since aluminum conductors are so weak mechanically at the termination joint due to extrusion, it is necessary to provide support from mechanical stresses, both tensional stress and torsional stress. Looking back at FIG. 3 it can be seen that cover **20** includes on its underside a plurality of troughs or grooves **26**, **27**, **28** and **29** and related blocks **37**, **38**, **39** and **40**. The purpose of these elements can be more clearly understood by referring to FIG. 8 which shows a longitudinal cross-section of a bridge-splice. The mating of the cover **20** with base **10** during the connection operation causes both ends of through wire **4** to be offset substantially from the axis of tunnel **14**. At the same time, wire **4** is firmly gripped between block **39** and retaining tab **42** at its right end and between block **40** and retaining tab **43** at its left end. Any tensional stress applied to the wire ends will be absorbed by the blocks **39** and **40** which prevent the stress from being transmitted to the joint interface with connector **30** where the conductor has been mechanically weakened by extrusion. Blocks **37** and **38** accomplish a similar function.

The sidewalls of troughs **26**, **27**, **28** and **29** work in conjunction with torsional stops **49**, **50** and **51** to support the wires and prevent any torsional stress applied to the wires from being transmitted into the area of the termination interface. The combination of the troughs in cover **20** and the torsional stops on base **10** confine the wires so that any twisting applied to the wires is absorbed and not transmitted into the interface.

Since aluminum conductors oxidize so readily and since a completely air-tight, stable connection is essentially impossible with a purely mechanical connection, it is recommended that the connector include a sealant to encapsulate the termination joint after the connection operation is completed. Using this connector, this is most effectively done by including a globule of sealant, such as polyethylene-polybutene, inside the cover assembly. Preferably, the sealant would be placed at the base of the U-shaped contact **30**.

As FIG. 8 clearly shows, the mating surface **6** of base **10** is concave or angled. This is done to insure that as the base **10** and cover **20** are mated during the connection operation, the sealant will be prevented from escaping from the interior of the connector until the termination is fully sealed. Rather, the sealant is forced down into openings **52** and **53** in base **10** insuring that the termination interface is fully encapsulated. If sealant subsequently is squeezed out of the connector because of any excess, no harm is done because it has already been insured that the termination interface is fully sealed. It should also be pointed out that the retaining tabs **41**, **42** and **43** are also useful to hold the sealant within the body of the connector. This is particularly important where all wire tunnels do not contain a wire so that without the presence of the retaining tab, a clear channel out of the connector body would be provided by the trough in cover **20** associated with the unused tunnel.

As I disclosed in in my previous Pat. No. 3,511,921, dated May 12, 1970, contact **30** could be advantageously plated with indium. Indium is a nono-oxidizing, solid but readily flowable, conductive material that penetrates the microscopic cracks in the aluminum oxide film. This affords a good electrical contact with the pure aluminum of the aluminum conductor while reducing oxidants at the interface.

Although I would envision base **10** and cover **20** being injection molded from a plastic material such as polycarbonate, other materials would also prove effective. Since base **10** would advantageously be molded, the removable plug **11** could be molded as part of base **10** but with readily separable perforations. This would permit only a single piece to be used, while at the same time permitting plug **11** to be readily and simply removed when necessary. This would avoid the necessity of fabricating plug **11** as a separate piece and then assembling the plug with base **10**. It should also be apparent that if the particular application contemplated required it, a similar plug could also be included on the other side of base **10**, permitting tunnel **12** to also be used to accept a through wire.

Although the embodiment shown has a capacity for three wire ends in a butt-splice or two wire ends and a through wire in a bridge-splice, it should be apparent that any number of tunnels could be provided in base **10** and a corresponding number of slots provided in contact **30**. It is felt, however, that the three-tunnel version would have the most universal application.

The resilient nature of retainer tabs **41**, **42** and **43** permit the connector to be used to effectively hold a wide range of wire gauges. This flexibility and universality is

extended to contact **30** where the tapered slots **33, 34** and **35** are also effective to connect a wide range of wire sizes. It should be pointed out that all the wires connected by a single connector need not be the same size; large gauge and fine gauge wires can be mixed and still be readily interconnected.

Contact **30** is shown as being generally U-shaped, although this is not essential to my invention. Contact **30** could function effectively with only a single slotted leg. However, since it is desired to establish connections that are stable and reliable for long periods of time, the redundancy of providing a double leg would seem to be preferred.

By way of illustration, in one embodiment of my invention, slots **33, 34** and **35** in contact **30** are approximately one-eighth inch deep measured from the shouldered portion of the contact and approximately .012 inch wide with a one degree taper. The width of the shoulder is approximately 60% of the .050 inch width of the leg of contact **30**. Using these dimensions, wire gauges in the nominal range of 17 to 26 gauge are easily and effectively used, either all the wires being the same gauge or any mixture of sizes within the range indicated. Of course, if it were desired to use a different range of wire gauges, the above dimensions could be readily altered by one having ordinary skill in the art to accommodate the revised range.

Despite the continual reference to plastic insulated wire in the specification, it should be clear that this connector is equally effective with pulp insulated wire, paper insulated wire, or wire insulated with any other common type of insulation. At the same time, it should be clear that the connector is not restricted in its application to aluminum conductor wire. Wire with copper conductor, or any other metallic conductor, could be as effectively connected as could the aluminum conductor wire. In fact, a mixture of wires having different conductor materials could be interconnected with equal facility.

Finally, although reference has been made throughout this specification to interconnecting a plurality of wires by connecting each to the contact of the connector, it should be apparent to those knowledgeable in the art that applications arise where it might be desirable to permanently connect a wire to the contact of the connector. For example, a wire could be soldered to the contact by including a terminal on the contact for such a purpose. Thereafter, additional wires could be solderlessly connected to the permanently connected wire as the particular application dictated. This is within the contemplation of the invention I have described and serves to further illustrate the universality of my connector.

What is claimed is:

1. A solderless connector for connecting a plurality of wires comprising:

a base including means for accommodating the wires to be connected;

a conductive metallic contact including a pair of cantilevered posts for each wire to be connected, each post including

a sidewall adjacent the other post of the pair and tapering continuously towards the other post at the fixed end, and each post also undergoing an abrupt change in thickness in the direction of the axis of the wire, the abrupt change being located adjacent the free end of the post; and

cover means for mating with the base to substantially enclose the contact, the mating of the cover with the base being simultaneously effective to force the wires into the tapered spaces between the pairs of posts;

whereby the insulation on insulated wires is restrained by the abrupt change in thickness when the base and cover are mated.

2. A solderless connector for connecting a plurality of wires comprising:

a base including means for accommodating the wires to be connected; wherein the means for accommodating the wires comprises:

a plurality of close-ended tunnels; and wherein the base also includes—

a plug separable from the base, the separation of the plug from the base being effective to open the side and end of one of the tunnels, thereby enabling the open tunnel of the base to be placed over the continuous wire to permit connection thereto; the connector further comprising:

a conductive metallic contact including a pair of cantilevered posts for each wire to be connected, the adjacent sidewalls of each pair tapering continuously together towards the fixed end of the posts; and

a cover adapted to mate with the base thereby substantially enclosing the contact, the mating of the cover with the base being simultaneously effective to force the wires into the tapered spaces between the pairs of posts so that electrical contact is established between the conductors of the wires and the posts of the contact.

3. A solderless connector for connecting a plurality of wires comprising:

a base including means for accommodating the wires to be connected;

a conductive metallic contact including a pair of cantilevered posts for each wire to be connected, the adjacent sidewalls of each pair tapering continuously together towards the fixed end of the posts; and

a cover adapted to mate with the base thereby substantially enclosing the contact, the mating of the cover with the base being simultaneously effective to force the wires into the tapered spaces between the pairs of posts so that electrical contact is established between the conductors of the wires and the posts of the contact; wherein

the cover and the base are shaped to latch to each other in two positions;

in the first position, the cover and the base latch together in a position leaving the contact clear of the accommodated wires, and

in the second position, the cover and the base are mated.

4. A solderless connector for connecting a plurality of wires comprising:

a conductive metallic contact including a pair of cantilevered posts for each wire to be connected, each post including:

a sidewall adjacent the other post of the pair and tapering continuously towards the other post at the fixed end, and

a shouldered portion adjacent the free end and forming an abrupt change in thickness in the direction of the axis of the wire;

a cover; and

a base adapted to mate with the cover thereby substantially enclosing the contact, the mating of the cover with the base being simultaneously effective to force the wires into the tapered spaces between the pairs of posts, the base including:

means for accommodating the wires to be connected comprising a plurality of close-ended tunnels into which the wires to be connected are inserted, and

means for holding the inserted wires in position to prevent them from backing out of the tunnels in the base prior to the mating of the cover and the base;

the insulation on insulated wires being restrained by the shouldered portion when the base and cover are

mated, so that the insulation is prevented from entering the tapered spaces between the posts, thereby tearing the insulation from the conductors of the wires as the wires are forced into the tapered spaces and exposing the conductors of the wires to permit contact to be established between the exposed conductors and the tapering sidewalls of the posts.

5. A connector in accordance with claim **4** wherein the holding means comprises:

a fixed member spaced from the open end of an individual tunnel and offset from the axis of the tunnel; and

a resilient member located between the open end of the tunnel and the fixed member, the resilient member being so located that when a wire is inserted into the tunnel and positioned in engagement with the fixed member, the resilient member is deflected to bias the wire against the fixed member.

6. A solderless connector for connecting a plurality of insulated wires comprising:

a base including means for accommodating the wires to be connected, wherein the base also includes:

a plurality of close-ended tunnels into which the wires to be connected are inserted; and

a removable plug for opening the side and end of one of the tunnels to permit the base to be placed over a continuous wire, permitting connection thereto;

a conductive metallic contact containing a plurality of slots, one for each wire to be connected, the entrance to the slots including a shouldered portion transverse to the axis of the slots for restraining the insulation to prevent the insulation from entering the slots; and

a cover which mates with the base to substantially enclose the contact, the mating of the cover with the base being also effective to force the wires into the slots in the contact.

7. A solderless connector for interconnecting a plurality of insulated aluminum conductor wires comprising:

a molded plastic base having a plurality of close-ended tunnels with chamfered entrances into which wire ends to be interconnected are inserted and including:

a removable plug for opening the side and end of one of the tunnels to create a trough into which a continuous wire is placed to be interconnected with wire ends in others of the plurality of tunnels; and

retainer means for holding the inserted wires in position and preventing the wires from backing out of the tunnels;

a metallic contact having a pair of cantilevered posts for each wire to be interconnected, adjacent sidewalls of each pair being formed to taper inward towards the fixed end with the free end of each post having a shouldered portion transverse to the axis of the tapered slot created between the posts of each pair;

a molded plastic cover formed to substantially enclose the metallic contact and mate with the base, the cover being effective when mated with the base, to force the wires inserted in the base into the slots in the metallic contact so that the posts are deflected from their initial position, the insulation on the wires is pierced and restrained from entering the slots, and electrical contact is made between the aluminum conductors of the wires and the metallic contact;

means for encapsulating the metallic contact and the interconnected wires when the base and cover are mated; and

means for offsetting the wires from the axis of the tunnels to prevent mechanical stress applied to the wires from being transmitted into the encapsulated area.

8. A solderless connector for connecting a plurality of plastic insulated, aluminum conductor wires, the connector comprising:

a base having a plurality of close-ended tunnels into which one end of each wire to be connected is inserted;

a conductive metallic contact including a pair of cantilevered posts for each wire to be connected;

a cover shaped to latch to the base in two positions,

in the first position the cover and the base latch together in a position leaving the contact clear of any wires inserted into the tunnels in the base, and

in the second position the cover and the base are mated and substantially enclose the contact, the mating of the cover and the base being simultaneously effective to force the inserted wires into slots between the posts of each pair so that the insulation on the wires is pierced thereby exposing the conductors of the wires and establishing intimate electrical contact between the conductors of the wires and the contact; and

means effective when the base and cover are locked in mated position to prevent axial and torsional stresses applied to the wires from being transmitted to the juncture between the conductors of the wires and the contact; wherein

the cover also includes—

a chamber for containing a volume of sealant;

the base also includes—

resilient means for securing any wires inserted into the tunnels of the base so that the wires cannot move out of position prior to the mating of the base and the cover, and

a concavity positioned to insure that the sealant contained in the cover will completely encapsulate the juncture between the contact and the conductors of the wires thereby producing an air-tight seal at the juncture; and

the posts of the contact also include a tapered sidewall on the edge adjacent the other post of the pair thereby forming an inwardly tapering slot into which the wires are forced so that unintended extrusion of the aluminum conductors is prevented prior to the conductors reaching a seated position in the slot, and

a shoulder transverse to the axis of the slot for restraining the insulation of the wires to prevent any insulation from entering the slots and interrupting the establishment of intimate electrical contact between the conductors of the wires and the contact.

9. A connector in accordance with claim **8** wherein the base also includes:

a plug separable from the base, the separation of the plug from the base being effective to open the side and end of one of the tunnels, thereby enabling the open tunnel of the base to be placed over a continuous wire to permit connection thereto.

10. A connector for use with insulated wire and having a conductive contact with a slot narrower than the width of the conductor of the wire to be connected, electrical contact being made with the conductive contact as the wire is forced into the slot wherein the improvement comprises:

means for deforming the insulation on the wire including a thin portion of the conductive contact adjacent to the entrance of the slot;

means for both restraining the insulation from further entrance into the slot and for tearing the insulation and exposing the conductor of the wire, said means including an abrupt change in thickness in the conductive contact in the direction of the wire axis; and

means for establishing electrical contact with the ex-

posed conductor including a thick portion of the conductive contact.

References Cited

UNITED STATES PATENTS

3,573,713	4/1971	Enright et al.	339—98
3,233,206	2/1966	Fiala	339—98
3,496,522	2/1970	Ellis, Jr. et al.	339—99 R
2,810,115	10/1957	Abbott	339—97 P
3,377,611	4/1968	Pawl	339—97 P
3,511,921	5/1970	Pasternak	339—98

3,012,219	12/1961	Levin et al.	339—98
3,573,710	4/1971	Wofford	339—94 M
3,576,518	4/1971	Bazille, Jr. et al.	339—98

FOREIGN PATENTS

560,583	9/1957	Belgium	339—103 R

JOSEPH H. McGLYNN, Primary Examiner

U.S. Cl. X.R.

339—103 M