Aug. 3, 1937. J. H. OTTMANN 2,088,806

DELIVERY CHUTE

Filed Aug. 20, 1934 3 Sheets-Sheet 1

Fig. 1.

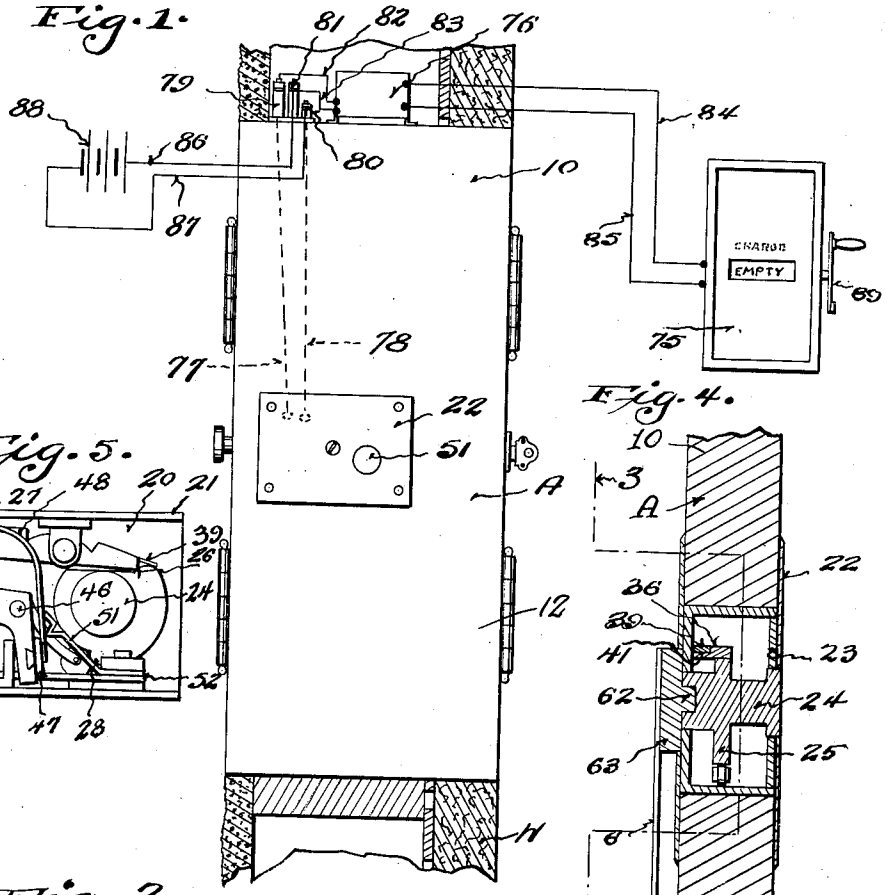

Fig. 4.

Fig. 5.

Fig. 2.

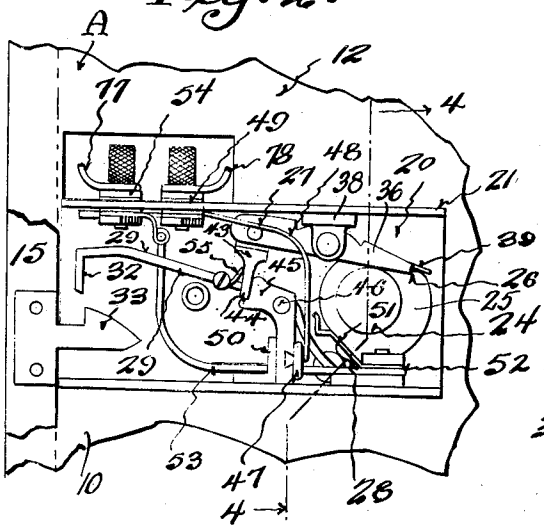

Fig. 3.

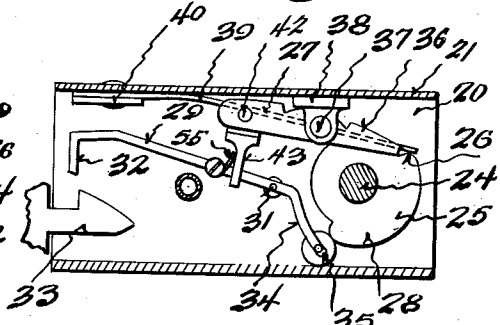

Inventor

John H. Ottmann

By

Attorneys

Aug. 3, 1937. J. H. OTTMANN 2,088,806

DELIVERY CHUTE

Filed Aug. 20, 1934 3 Sheets-Sheet 2

Fig. 6.

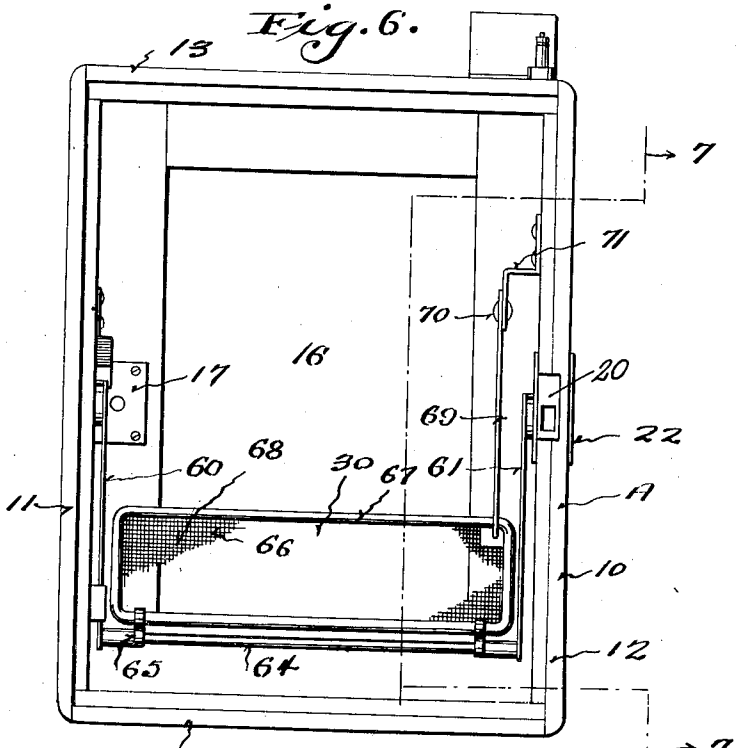

Fig. 7.

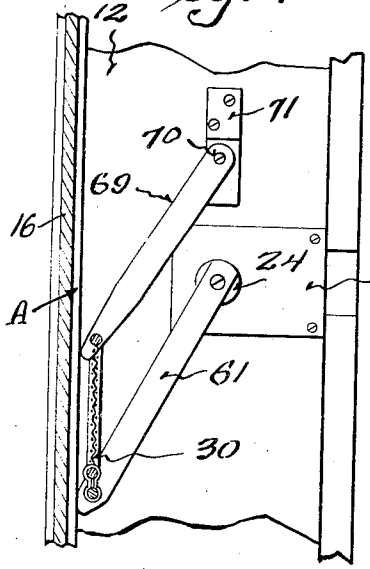

Fig. 8.

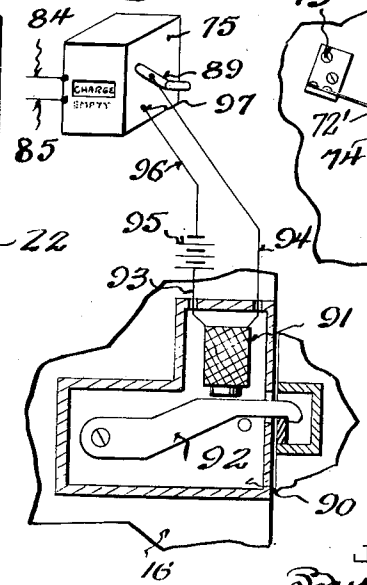

Fig. 9.

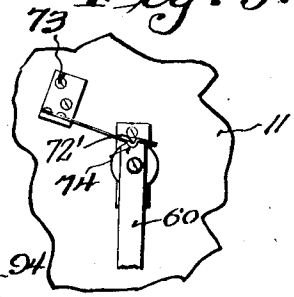

Inventor
John H. Ottmann
By
Attorneys

Aug. 3, 1937. J. H. OTTMANN 2,088,806

DELIVERY CHUTE

Filed Aug. 20, 1934 3 Sheets-Sheet 3

Fig. 11.

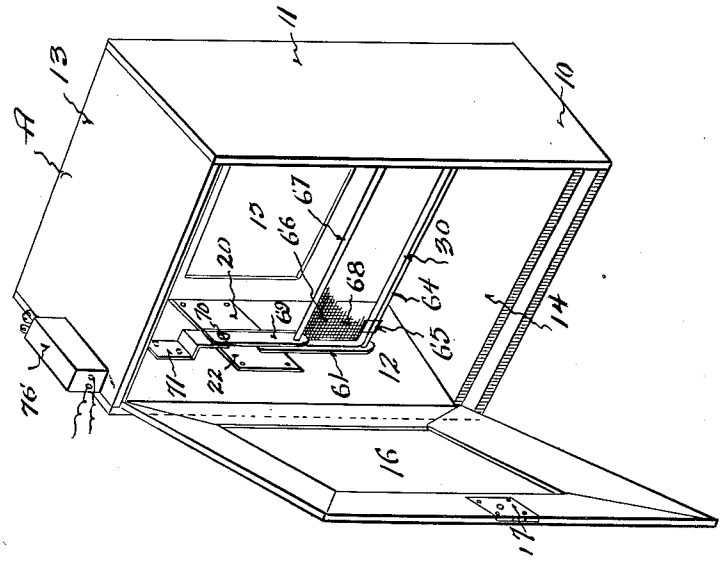

Fig. 10.

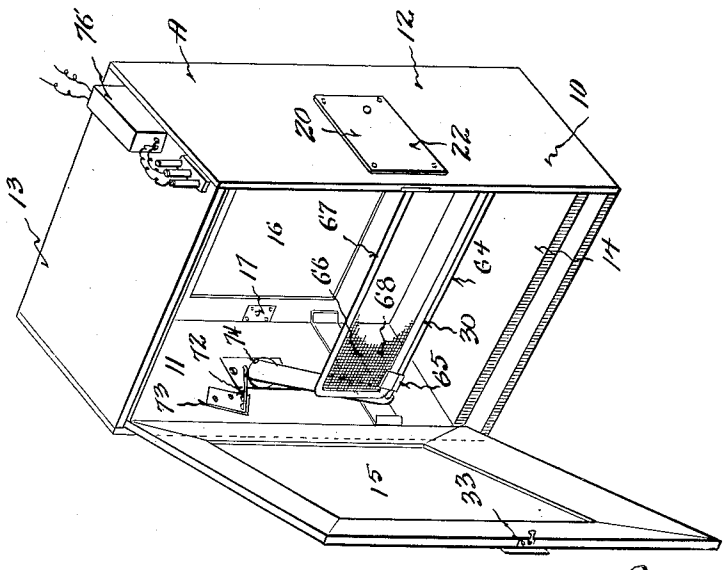

Inventor

John H. Ottman

By

Attorneys

Patented Aug. 3, 1937 2,088,806

UNITED STATES PATENT OFFICE

2,088,806

DELIVERY CHUTE

John H. Ottmann, Milwaukee, Wis.

Application August 20, 1934, Serial No. 740,679

1 Claim. (Cl. 232—41)

This invention appertains to delivery chutes, or compartments, of the type having an outer door in one side opening into the outdoors or public hallways, as the case may be, and an inner door opening into the house or apartment, whereby milk, newspapers, packages, etc., can be conveniently delivered without disturbing the occupants of the house or apartment.

In the usual arrangement, the outer door is not provided with a lock, so that persons making deliveries may have free access to the chute or compartment. However, difficulty is encountered in that after a delivery is made, unauthorized persons can have admittance to the box; consequently the danger of the delivered goods being stolen is always apparent. Likewise, the chute had to be made relatively small, so that persons could not gain access into the home through the chute.

It is, therefore, one of the salient objects of my invention to provide a delivery chute of the above character in which the outer door is normally in an unlocked condition, so that a delivery can be made, but which will be automatically locked by the placing of an article in the chute, whereby such article cannot be removed from the outside.

A further object of my invention is to provide means for automatically unlocking the outer door by the removal of the delivered article through the inner door, so that the box, or chute, will be in condition for the delivery of other articles.

A further object of my invention is the provision of a swinging gate disposed within the box, or chute, normally held in a vertical position toward the outer door and adapted to be moved from such position by the placing of an article in the box, or chute, movement of the gate from its normal position functioning to actuate the lock to hold the outer door closed, the gate automatically returning to its normal position upon the removal of the delivered article from the box for releasing the latch, or lock.

A further object of my invention is to provide novel means for constructing the gate itself, whereby the same will occupy a minimum amount of space and thus not decrease the active interior size of the box, the gate being also of such a character as to be readily actuated by articles of all kinds, whether large or small, thereby insuring the proper actuation of the lock.

A further object of my invention is to provide novel means for actuating a circuit closer upon the operation of the lock by the gate for momentarily closing a circuit through an electrical indicator, disposed in an appropriate place, such as in the kitchen for calling the attention of the housewife to the fact that a delivery has been made.

A further object of my invention is the provision of means operated from the indicator to automatically unlock the inner door when the indicator is manually moved back to its normal position, so that the manual actuation of a lock for the inner door will be eliminated.

A still further object of my invention is to provide an improved delivery chute, or box, of the above character, which will be durable and efficient in use, one that will be simple and easy to manufacture, and one which can be placed upon the market at a reasonable cost.

With these and other objects in view, the invention consists in the novel construction, arrangement and formation of parts, as will be hereinafter more specifically described, claimed and illustrated in the accompanying drawings, in which drawings:—

Figure 1 is a side elevation of my improved delivery chute, or box, showing the same set in a wall, the wall being shown in section, the view also illustrating the wiring diagram for the electrical indicator.

Figure 2 is an enlarged fragmentary side elevation of the delivery chute, or box, with the cover and the escutcheon plate of the lock, removed to disclose the interior mechanism of the lock, parts of the box being also broken away to illustrate the door carried keeper.

Figure 3 is a longitudinal section through the lock, taken substantially on the line 3—3 of Figure 4, looking in the direction of the arrows.

Figure 4 is a transverse section through the lock, taken on the line 4—4 of Figure 2.

Figure 5 is a detail view of the lock after the actuation thereof by the gate.

Figure 6 is a front elevation of my improved box, or chute, with the outer door entirely removed to illustrate the interior mechanism of the box.

Figure 7 is a detail transverse section taken on the line 7—7 of Figure 6, looking in the direction of the arrows, illustrating the construction of my novel gate and showing the same in its operative position after the insertion of an article within the box, or chute.

Figure 8 is a diagrammatic view illustrating the means for automatically actuating the latch of the inner door upon the manual actuation of the electrical indicator.

Figure 9 is a detail sectional view, looking in the direction opposite from Figure 7 and illustrating the means employed for holding the operating gate in its normal position.

Figure 10 is a perspective view of the improved chute or box, looking from the front thereof, with the front door open.

Figure 11 is a perspective view of the chute or box, looking from the rear thereof, and showing the rear door in its open position.

Referring to the drawings in detail, wherein similar reference characters designate corresponding parts through the several views, the letter A generally indicates my improved milk chute, or box, which is adapted to be set into a wall W.

The milk chute, or box, A comprises a body 10 including the side walls 11 and 12, and the top and bottom walls 13 and 14. The outer face of the box, or chute, is closed by a swinging door 15, and the inner end of the box is closed by a swinging door 16. The box and doors can be made from any preferred material, such as metal or wood. If desired, the inner door 16 can be normally held in a closed position by a key-operated lock 17.

The outer door 15 is held in its locked or unlocked position, as the case may be, by my novel mechanism, which will now be described.

This mechanism comprises a novel lock 20, which includes a lock casing 21 set into the wall 12 of the milk chute A. If preferred, the lock casing can be hid from view both on the inside and outside of the milk chute by escutcheon plates 22. The lock casing 21 can also be provided with a removable plate 23. Normally mounted within the lock casing is a cam shaft 24, which has formed thereon the novel operating cam 25. This cam 25 is provided with an upper shoulder 26 for actuating a circuit closer mechanism 27 and a lower shoulder 28 for actuating the latch lever 29. The cam 25 and its shaft 24 is operated through the medium of a novel operating gate 30, which will be later described, but it is to be noted at this point that the cam shaft extends through the wall of the lock casing 21.

Referring to the latch lever 29, it is to be noted that the same is rockably mounted intermediate its ends on a pivot pin 31, and that its front forward end is provided with a hook, or nose, 32 for releasable engagement with the latch keeper 33, which is carried by the free edge of the outer door 15. This keeper 33 is movable into and out of the lock casing 21. The rear end of the latch lever 29 is provided with a tailpiece 34 having an antifriction roller 35 for engagement with the periphery of the cam 25 and its shoulder 28. The roller 35 is normally held against the cam by the weight of the forward end of the latch lever.

The circuit closer 27, the purpose of which will also be later described, comprises a lever 36 rockably mounted intermediate its ends on a pivot pin 37 carried by a bracket 38 supported from the top wall of the lock casing. The rear end of the rock lever 36 is normally held against the periphery of the cam 25 by a leaf spring 39. One end of the leaf spring is anchored, as at 40, to the lock casing, and the other end of the leaf spring bears against a lug 41 formed on the rock lever. The forward end of the rock lever has pivotally connected thereto, as at 42, a trip finger 43, which depends from the rock lever.

The trip finger 43 normally rests on a shoulder 44 formed on one end of a bell crank shaped trigger 45. This trigger 45 is rockably mounted at its angle on a pivot pin 46. The lower arm of the trigger carries a foot 47 formed of insulated material.

Normally bearing against the foot 47 is a resilient leaf spring 48, which is formed from electrical conducting material. This leaf spring has one end anchored firmly in place by the binding post 49. The leaf spring 48 functions to normally hold the trigger in an inoperative position back against a stop bracket 50 secured to the lock casing 30.

Arranged in spaced relation to the spring 48 is an electrical conducting spring finger 51, which is suitably anchored to a binding post 52 carried by the lock casing. The binding post 52 also has connected therewith a conductor wire 53, which leads to a binding post 54.

The binding posts 49 and 54 are carried by the top wall of the lock casing and are electrically insulated therefrom. The binding post 52 is carried by the bottom wall of the lock casing and is also insulated therefrom.

A small spring 55 is provided for normally urging the trip finger 43 into engagement with the shoulder 44 and against the trigger 45.

In operation of the lock mechanism, from the description so far, it can be seen that when the cam is actuated in a counter-clockwise direction, the shoulder 28 will ride past the roller 35 of the latch lever 29, which will allow the nose 32 of the latch lever to fall and lie in the path of the keeper 33. Consequently, when the door 15 is closed and the keeper 33 rides into the lock casing, the latch lever 29 will hold the door 15 against opening movement.

Synchronous with the releasing of the latch lever 29, the circuit closer is actuated. The shoulder 26 of the cam 25 will rock the lever 36 and push down on the trip finger 43. The trip finger 43 will bear against the shoulder 44 and operate the trigger 45.

Swinging movement of the trigger 45 forces the contact spring 48 into engagement with the contact finger 51 and brings about the closing of a circuit through an indicator mechanism, which will also be later set forth.

The closing of the circuit is only for a short duration of time, in that the trip finger 43 will ride past the shoulder 44, which will allow the trigger to return to its normal position under the influence of the spring 48, and thus bring about the movement of the spring away from the contact finger 51.

Referring to the novel gate mechanism 30 utilized for actuating the cam, it can be seen from Figures 6 and 7 that the same embodies a pair of parallel arms 60 and 61. The arm 60 is pivotally connected to the side wall 11 of the box, or chute, and the arm 61 extends into the lock casing and is rigidly connected with the cam shaft 24, as at 62.

If desired, the arm 61 can be provided with a bearing head 63 which is rockably mounted within the inner escutcheon plate 22, and the head has axially secured thereto a polygonal extension which is fitted within a recess in the shaft. If desired, each end of the shaft can be provided with a like recess, so that the lock can be used either on the left or right hand side of the body of the box, or chute.

The lower ends of the arms are rigidly connected together by a cross-rod 64, and hingedly mounted on the cross-bar by means of sleeves 65 is the gate body proper 66. The gate body proper

66 includes an open frame 67 covered by wire mesh 68. The body 66 is provided so as to form an abutment against which articles can be placed.

The gate body is so arranged that the same will swing in a vertical position at all times and thus lie flat against the doors when the gate is operated, whereby the gate will occupy a minimum amount of space within the box when articles are placed therein.

In order to maintain the gate body in a vertical position at all times, a link 69 is pivotally connected to the upper cross-bar of the frame 60. This link is in turn pivotally connected at its upper end, as at 70, to a bracket 71 rigidly secured to the side wall 12 of the box. This link functions ideally to hold the gate body in a vertical position during the swinging movement of the arms 60 and 61.

Considering that the outer door 15 is unlocked when a delivery is made, this outer door is open and the article is placed within the box and against the gate 30, which will swing the gate toward the inner door 16. The swinging movement of the gate operates the cam 25 in the counter-clockwise direction and brings about the releasing of the latch lever 29 and the actuation of the circuit closer, as heretofore described. Thus, when the door is closed, the latch lever 29 will engage the keeper 33 and hold the door 15 against unauthorized opening movement.

When the inner door 16 is opened by the occupant of the home and the delivered article is removed, the gate will swing by gravity to its normal position, which will rotate the cam in a clockwise direction, and consequently the shoulder 28 will again ride into engagement with the roller 35 of the latch lever and move the latch lever to an elevated position, so that the outer door can again be opened.

The gate 30 is extremely sensitive and a slight depression will actuate the same. In order to insure the gate returning to its proper position, I provide a leaf spring 72, which is secured to a bracket 73 carried by the side wall 11 of the box. This spring 72 is provided with a curved nose 72', which is adapted to ride on the upper end of the arm 60.

As the gate nears its normal position, the nose creates a pressure on the upper end of the arm and against the wall of a notch 74 formed in the arm. This slight pressure will swing the arm and consequently the gate to its correct position. The spring also functions to hold the gate against accidental swinging movement.

I prefer to provide means for indicating to the housewife that an article has been placed in the box, or chute. This means may consist of an electrical indicator 75 of the ordinary drop type, and this indicator can be placed in the kitchen or at any other convenient point.

The electrical indicator is operated by means of the circuit closer 27. If desired, a transformer 76 can be carried by the box, or chute, A so that the indicator 75 can be operated from the house circuit.

The wiring is as follows—electric conductors 77 and 78 are electrically connected by the binding posts 54 and 49, and these wires are in turn electrically connected with the binding posts 79 and 80 carried by the top wall of the box. A third binding post 81 can be provided.

Wires 82 and 83 lead from the binding posts 79 and 81 to the transformer 76, and leading from the transformer are wires 84 and 85 which are electrically connected with the drop indicator 75. Lead and return wires 86 and 87 are electrically connected with the binding posts 81 and 80, and these wires 86 and 87 lead from a suitable source of electrical energy, as at 88.

When the circuit is closed the current flows as follows—through the wire 87, binding post 80, wire 78, through the circuit closer, wire 77, through the transformer, wire 84, through the indicator 75, through wire 85, transformer 76, through wire 83, binding post 81, through wire 86, back to the source of electrical energy.

The indicator 75 is provided with a re-set lever 89, so that the indicator can be manually operated to return the same to its normal position. If desired, the indicator can carry the words "Empty" and "Charge".

In Figure 8, I have illustrated a slightly modified form of my invention, and in this form the key-operated lock 17 for the inner door 16 can be dispensed with and an automatic lock 90 can be substituted therefor. The lock 90 is adapted to be operated when the re-set lever 89 is operated for moving back the indicator, so that the inner door will be automatically released.

This mechanism may include an electro-magnet 91 positioned for attracting the latch lever 92 when the electro-magnet is energized. Wires 93 and 94 lead from the electro-magnet, and the wire 93 can be connected to one terminal of a battery 95, or a similar source of electrical energy.

Leading from the other terminal of the battery 95 is a wire 96. The wires 94 and 96 lead to a circuit closer actuated by the re-set lever 89. This circuit closer can be of any desired type, and for the purpose of illustration, the wire 94 is electrically connected with the lever 89, and the wire 96 is connected to a contact head 97. Consequently, when the lever 89 is moved into engagement with the contact head 97, the circuit will be closed through the electro-magnet.

If preferred, a transformer can be utilized in the circuit for the electro-magnet, whereby the electro-magnet can be operated from the house circuit.

From the foregoing description, it can be seen that I have provided an exceptionally simple and durable delivery chute in which the outer door will be automatically locked when an article is placed within the box, or chute.

Changes in details may be made without departing from the spirit or the scope of this invention, but what I claim as new is:—

A delivery cabinet comprising a casing opened at its opposite ends, a delivery door closing one end of the casing, a removal door closing the other end of the casing, and means for automatically latching the delivery door against opening movement upon the placing of an article in the casing including an article-actuated, vertically swinging gate movable across the casing toward and away from the doors, said gate including a cross-bar, a gate body carried by the cross-bar, pivot links connected to the cross bar, pivot supports for the links, one of said pivot supports being rigidly connected to its link, a keeper carried by the outer delivery door, a pivoted latch lever carried by the casing disposed in the path of the keeper for locking engagement therewith, an operating cam normally holding the latch lever in a raised position and out of the path of the keeper, and means rigidly connecting the last mentioned pivot support with the cam.

JOHN H. OTTMANN.