PCT WORLD INTELLECTUAL PROPERTY ORGANIZATION
International Bureau

INTERNATIONAL APPLICATION PUBLISHED UNDER THE PATENT COOPERATION TREATY (PCT)

(51) International Patent Classification 5 :		(11) International Publication Number:	WO 93/07704
H04M 11/00	A1	(43) International Publication Date:	15 April 1993 (15.04.93)

(21) International Application Number: PCT/US92/07093

(22) International Filing Date: 19 August 1992 (19.08.92)

(30) Priority data:
767,185 30 September 1991 (30.09.91) US

(71) Applicant: MOTOROLA, INC. [US/US]; 1303 East Algonquin Road, Schaumburg, IL 60196 (US).

(72) Inventors: BREEDEN, Robert, L. ; 22940 Greenview Terrace, Boca Raton, FL 33433 (US). LOCKHART, Robert, K., JR. ; 5421 Rose Marie Avenue North, Boynton Beach, FL 33436 (US). BENNETT, Leonard, W ; 1641 S.W. 56 Avenue, Plantation, FL 33317 (US). GIACOMINO, Gerald, L. ; 10951 N.W. 32 Court, Coral Springs, FL 33065 (US). D'AMICO, Thomas, V. ; 2707 N. Ocean Blvd. #302, Boca Raton, FL 33431 (US).

(74) Agents: GHOMESHI, M., Mansour et al.; Motorola, Inc., Patent Dept., 8000 West Sunrise Boulevard, Fort Lauderdale, FL 33322 (US).

(81) Designated States: AU, BR, CA, FI, JP, KR, NO, European patent (AT, BE, CH, DE, DK, ES, FR, GB, GR, IE, IT, LU, MC, NL, SE).

Published
With international search report.

(54) Title: CORDLESS TELEPHONE SYSTEM WITH INBOUND CALLING

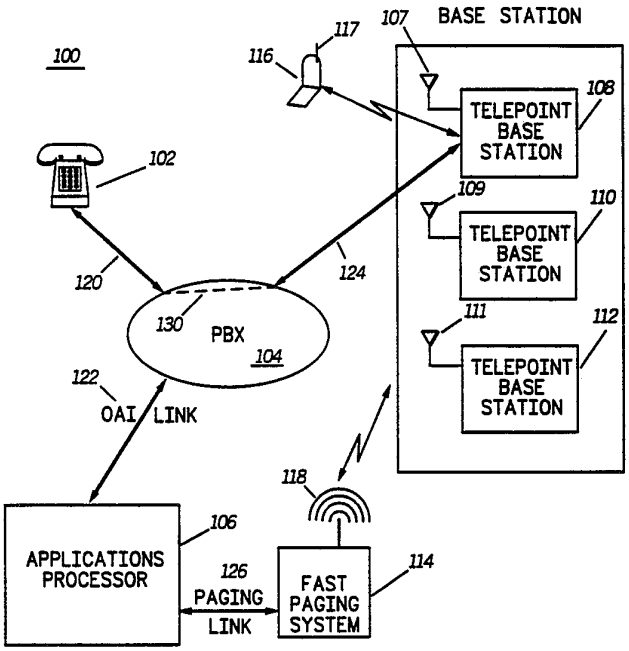

(57) Abstract

A method and apparatus of processing an inbound call to a pager equipped cordless communication device (116) having a device identification number and a pager identification number is provided. The method comprises the steps of receiving the inbound communication via a switching station (130) and paging (412) the wireless communication device (116) via a paging station (114). Upon such a page, the communication device (116) links to a telepoint base station (108) which then contacts the switching station (104). The switching station (104) subsequently links the inbound call with the call back from the communication device (116).

FOR THE PURPOSES OF INFORMATION ONLY

Codes used to identify States party to the PCT on the front pages of pamphlets publishing international applications under the PCT.

AT	Austria
AU	Australia
BB	Barbados
BE	Belgium
BF	Burkina Faso
BG	Bulgaria
BJ	Benin
BR	Brazil
CA	Canada
CF	Central African Republic
CG	Congo
CH	Switzerland
CI	Côte d'Ivoire
CM	Cameroon
CS	Czechoslovakia
CZ	Czech Republic
DE	Germany
DK	Denmark
ES	Spain
FI	Finland
FR	France
GA	Gabon
GB	United Kingdom
GN	Guinea
GR	Greece
HU	Hungary
IE	Ireland
IT	Italy
JP	Japan
KP	Democratic People's Republic of Korea
KR	Republic of Korea
LI	Liechtenstein
LK	Sri Lanka
LU	Luxembourg
MC	Monaco
MG	Madagascar
ML	Mali
MN	Mongolia
MR	Mauritania
MW	Malawi
NL	Netherlands
NO	Norway
NZ	New Zealand
PL	Poland
PT	Portugal
RO	Romania
RU	Russian Federation
SD	Sudan
SE	Sweden
SK	Slovak Republic
SN	Senegal
SU	Soviet Union
TD	Chad
TG	Togo
UA	Ukraine
US	United States of America
VN	Viet Nam

CORDLESS TELEPHONE SYSTEM WITH INBOUND CALLING

Technical Field

This invention relates generally to communication systems and more particularly to systems for personal communicators.

Background

Public telephone systems and private telephone systems use PSTN (public switching telephone network) and PBX (private branch exchange) units, respectively for providing communication between telephones internal and external to their systems. Incoming and outgoing calls are handled by the PSTN and PBX units, transparently to the telephone user. As cordless personal communicators (PCs); such as CT-2 are becoming more available, it is desired to provide the full benefits of PSTNs to PCs. However, a significant problem exists in locating a roaming PC as an incoming call is being processed. Various methods have been proposed to enable inbound calling in CT-2 telepoint

systems and other communications systems having distributed uncoupled base stations. Generally the earlier methods have either a meet-me switch combined with some method of alerting the appropriate base station(s) to poll for the called handset, or a pager in the handset requiring a manual and operator initiated call back to the originating caller. The main drawback of the earlier method is the necessity for the handset user to manually forward register with a base station (or a group of base stations) in order to eliminate the need for ubiquitous polling by all base stations, which would require too much wasted air time in all but the smallest systems. The main drawback of the latter method is the lack of transparency to the caller, as compared to calling a wired telephone. It is therefore clear that a need exists for a method for inbound calling wherein the call is handled the same as a call to a wired telephone, but without the requirement for the handset user to do anything special to enable the call to be received.

Summary of the Present Invention

A method of processing an inbound call to a pager equipped cordless communication device having a device identification number and a pager identification number is provided. The method comprises the steps of receiving the inbound communication via a switching station and paging the wireless communication device. Upon such a page the communication device links to a telepoint base station which then contacts the switching station. The switching station subsequently links the inbound communication with the call back from the communication device.

In another aspect of the present invention, a method of providing inbound communication from a caller to a wireless communication device having an onboard pager is provided. The method includes the steps of allocating a meet me port to the incoming call followed by paging the communication device with information on the meet me port using the pager identification number. Upon such a page, the cordless communication device

registers with a telepoint base station and requests a call back to the meet me port. A call placed by the base station is received at a switching station where it is coupled to the meet me port and thereby coupled to the incoming call.

Brief Description of the Drawings

FIG. 1 is a communication system in accordance with the present invention.

FIG. 2 is a flow chart of the operation of an alternative embodiment of a communication system in accordance with the present invention.

FIG. 3 is an alternative embodiment of the communication system of the present invention.

FIG. 4 is a flow chart of the operation of the communication system of FIG. 1.

Description of the Preferred Embodiment

Referring to FIG. 1, a block diagram of a communication system 100 is shown in accordance with the principles of the present invention. The system 100 includes a telephone unit 102 which in this embodiment is used to originate a call to a cordless communication device 116. The cordless communication device 116 includes a device identification number, hereinafter referred to as handset number (HN). The device 116 is equipped with a pager which includes a pager identification number, hereinafter referred to as pager number. An incoming call originated by the telephone unit 102, or any other telephone unit, is coupled to a private branch exchange (PBX) 104. The coupling between the telephone unit 102 and the PBX 104 is provided with cables 120. The PBX 104 could be any switching station, including PSTN (Public Switching Telephone Network), that is capable of receiving and processing incoming calls from the telephone unit 102. An incoming call having the handset number (HN) of the device 116 and coupled to the PBX 104 is communicated to an applications processor 106, preferably via an open applications

interface (OAI) link 122. This OAI link and other links such as open system interface (OSI) links are generally capable of providing information on incoming calls. Such information as called and calling directory number. These links are also capable of accepting control responses, such as call transfer. Using this OAI link 122, the PBX 104 can optionally transfer the calling party number (CPN) to the applications processor 106. The applications processor 106 cross references the HN to a pager number and therefore determines the paging identification number of the communication device 116. The cross referencing of the HN to pager number may be eliminated by using same numbers for both. Using the pager number, the applications processor 106 contacts a paging system, preferably fast paging system 114 via a paging link 126. The fast paging system 114 responding to this request for page, transmits a page via an antenna 118. This page includes the HN and optionally the CPN.

This page is received by the communication device 116 via an antenna 117. Responding to this page, the handset 116 proceeds to register with the closest of any one of 108, 110, and 112. The number of telepoint base stations depends on the characteristics of the system 100 and the coverage area. The base stations 108, 110, and 112 communicate to the handset 116 via antennas 107, 109, and 111, respectively. In the preferred embodiment the handset 116 registers with the base station 108. The handset 116, having established communication with the base station 108, dials a special OAI code followed by the HN to the PBX 104 via a link 124. At this point, the link 124 is similar to the link 120 and the base station 108 communicates to the PBX 104 as any ordinary telephone unit; such as 102. Generally stated the link 124 is between the handset 116 and the PBX 104. By placing a call to the PBX 104, the base station 108 reserves a phone line number (PLN). The PBX 104 sends the HN and the PLN to the applications processor 106. The applications processor 106 being aware of the incoming call from the telephone unit 102 instructs the PBX 104 to transfer a call for handset 116 to the reserved PLN. This transfer is shown by the dash line 130 in the PBX 104. With this link established, the

telephone unit 102 starts communicating with the handset 116 via the telepoint base station 108 thereby allowing inbound communication to the cordless communication device 116..

Referring now to FIGS. 4a and 4b, a flow chart of the operation of the communication system 100 is shown in accordance with the present invention. From the start block 402, a caller dials HN, block 404. Receiving a call from the caller, telephone unit 202, the PBX 104 communicates the HN to the applications processor 106, block 406. Optionally, the PBX 104 can also communicate the calling party number (CPN) to the applications processor 106 via a condition block 408. The NO output of the condition block 408 is coupled to a block 410 where the applications processor 106 communicates HN to the paging 114. The paging system proceeds to page the handset 116, block 412. Upon receiving this page, the handset 116 links with a nearby base station, block 414. The YES output of the condition block 408 which is optional and not necessary for the operation of the present invention is coupled to a block 418 where the applications processor 106 communicates HN along with the CPN to the paging system 114. The paging system 114, then pages the handset 116 with the HN and the CPN number, block 420. The handset 116 screens incoming calls based on a variety of factors including the CPN, block 422. Upon screening the calls, the operation is coupled to a condition block 424, where the handset 116 decides to answer the call. The NO output results in transferring the call to another number or to a voice messaging center (VMX), block 425. The YES output is however, coupled to the block 414 where the handset links with nearby base station 108. Once the handset 116 has registered, the base station 108 dials a special OAI code followed by the HN, block 416. Furthermore, the base station 108 reserves a PLN, block 426. With the handset 116 responding to the page, the PBX sends HN and PLN number to the applications processor 106, block 428. Block 430 follows where the applications processor 106 instructs the PBX 104 to transfer the call for the handset 116 to the reserved PLN. With this transfer, the caller communicates with the handset 116, block 434.

It can be seen that by including a pager in the handset 116, a caller using any ordinary telephone such as telephone unit 102 can place a call to the handset 116 without having to know of its exact location or without the involvement of the handset operator. This eliminates the need for the handset 116 to continuously scan available telephone base stations and inform the system of its exact location. An inbound call is followed by a page which is automatically, and transparent to the user, answered allowing communication between the caller and a roaming cordless communication device.

To summarize, the communication system 100 is shown to include the capability for the cordless communication device 116 to be contacted by the telephone unit 102. A call originated from the telephone unit 102 is received at the PBX 104 and coupled to the applications processor 106. The applications processor 106 cross references the handset number to the pager identification number of the communication device and sends a page request to the paging system 114. The page is sent from the paging system 114 to the pager in the communication device 116. In response to this page, the communication device 116 registers with the closest telepoint base station, namely 108 and requests a call back to the PBX 104. This call back is reported to the applications processor 106 where a request to link that with the telephone unit call is made to the PBX 104. In response, the PBX 104 couples the inbound call to the device 116 via link 130. The advantage of this a method of placing an inbound call to a handset, is that the call is transparent to the both the caller and the callee. With this invention, a method for completing inbound calls to roaming pager equipped handsets in a business environment via an existing PBX using a control link between the PBX and a simple co-located applications processor is provided.

Referring now to FIG. 3, an alternative embodiment of the present invention is shown, communication system 300. In the communication system 300 an inbound call to a cordless communication device 316 is placed by a telephone unit 302. This inbound call is coupled to a public switch telephone network (PSTN) 304 via a link 320. The PSTN 304 communicates this

inbound call to a switch matrix 306 via links 334 and 322. At the switch matrix 306, a meet me port is reserved for the incoming call. The assigned meet me port number and the HN are then sent from the switch matrix 306 to a paging system 314 via a paging link 326. Once a request has been received by the paging system 314, a page is sent out via an antenna 318. This page is received by the pager in the handset 316 via an antenna 317. The contents of the page is dependent on the requirement of the system. This will include the meet me port number and may include information on the the calling party number (CPN). Upon reception of the page, the handset 316 registers with any of telepoint base stations 308, 310, and 310 that is closest to it. The three base stations 308,310, and 312 communicate with the handset 316 via antennas 307, 309, and 311, respectively. Upon registering with the closest base station, namely 308, the handset 316 places a call to the meet me port number. This call from the telephone base station 308 is coupled to the PSTN 304 via a link 324. The PSTN 304 processes the call and then routes it to the switch matrix 306 via the links 336 and 328. At the switch matrix 306, a connection is provided between the inbound call and the call from he base station 308. This link is shown by 332. With this link, the inbound call will be coupled to the handset 316 and the communication continues.

Referring to FIG. 2, a flow chart of the operation of the communication system 300 is shown in accordance with the present invention. From the start block 202, the operation is coupled to a caller dials handset number, block 204. This call is coupled to the PSTN 304 which communicates the HN to the switch matrix 306, block 203. Following block 203, an optional block allows the PSTN 304 to communicate the calling party number (CPN) to the switch matrix 306 as well. The coupling of the CPN to the switch matrix 306 may be used to provide some degree of screening by the handset 316 or its operator. The switch matrix 306, reserves a meet me port with a number, block 206. Once a meet me port has been assigned, the switch matrix 306 sends a request for page along with the meet me port number and the pager number of the handset 316 to the paging

system 314, block 208. Furthermore, the switch matrix 306 may optionally send the CPN number to the paging system 314, block 209. Upon receiving the request for page, the paging system 314 pages the handset and sends meet me port number, block 216. The paging system 314 also optionally sends the CPN number to the handset 316, block 212. Once the page is received by the handset 316, a condition block 214 decides whether the handset 316 is successful linking with a nearby base station. The NO output of the condition block 214 which is encountered in situations where the handset 316 is out of the range of any of the base stations 308, 310, or 312 is coupled to a block 216 where a transfer of the call to another number or to a VMX 330 is initiated. Following block 216, the caller is informed of no answer and is directed to leave a message on the VMX 330, block 224. The YES output of the condition block 214 is coupled to a handset calls meet me port number to the base station, block 218. This call back is routed from the PSTN 304 to the switch matrix 306 where it is connected to the meet me port, block 220. Finally, the caller communicates with the handset, block 222.

To summarize, an alternative embodiment to the present invention is shown to include the pager equipped handset 316. An inbound call is received at the PSTN 304 where it is coupled to the switch matrix 306. At the switch matrix 306, a meet me port is assigned to the inbound call and a request for a page is sent to the paging system 314. This request for page includes information on the meet me port number and optionally the calling party number. The paging system 314 sends a page which is received by the pager in the handset 316. Upon such reception, the handset 316 registers with the closest base station and requests a call back to the meet me port number. The base station 308 places a call back to the meet me port in the switch matrix 306 via the PSTN 304. The switch matrix 306 receives this call and couples it to the meet me port thereby allowing the telephone unit 302 to communicate with the handset 316. In other words, an inbound call for a specific handset enters the PSTN 304, the call is routed to a meet me switch in the switch matrix 306. The meet me switch then assigns one of its meet me

ports to that call and passes the call number and the associated meet me port number directly to the paging system 314. Note that a network control center is no longer needed as it was required in the earlier meet me approaches which required forward registration. The paging system 314, then sends a data page to the pager in the handset 316 identified by the HN that a page contains the call back number of the assigned meet me port. Upon receipt of the page, the handset 316 automatically attempts a call back to the receive meet me port number via any compatible base station within range. This base station may be public or private. Upon call completion, the waiting caller is connected to the called handset 316. If the call fails to complete for any reason, the meet me switch will terminate the call after an appropriate time out. At that time the caller could be forwarded to a voice mail system or other appropriate destinations. Optionally, the PSTN 304 having automatic number identification (ANI) capabilities can send the calling party's number (CPN) which would be forwarded from he meet me switch to the paging system to the handset 316. The handset 316 could then display the (CPN) and allow the user to screen incoming calls or to allow the handset user to return the call at a later time if he or she is currently not within the range of a base station.

What is claimed is:

Claims

1. In a cordless communication system having at least one pager equipped cordless communication device having a device identification number and a pager identification number, at least one telepoint base station, and a switching station, a method of routing an incoming call to the at least one cordless communication device, comprising the steps of:

receiving the incoming call at the switching station;

allocating a meet me port to the incoming call;

paging the communication device with information about meet me port using the pager identification number;

the cordless communication device registering with the at least one telepoint base station and requesting a call to the meet me port;

the switching station receiving the call from the telepoint base station; and

coupling the received call to the meet me port at the switching station.

2. The method of claim 1, further including the step of transferring the incoming call to a voice message center.

3. The method of claim 2, further including the step of informing the caller when the cordless communication device can not be located.

4. In a communication system having a personal communicator with an identification number, a method of coupling an inbound call to the personal communicator comprising the steps of:

receiving the inbound call at a switching station;

communicating the inbound call to an applications processor;

paging the personal communicator;

the personal communicator linking with a telepoint base station and informing the applications processor that it is ready to receive the inbound call; and

the applications processor coupling the personal communicator to the inbound call.

5. A communication system, comprising:

at least one pager equipped cordless communication device;

a switching station for receiving an incoming call intended for the communication device;

a paging system coupled to the switching station for paging the communication device;

at least one telepoint base station for providing communication between the communication device and the switching station; and

controller means coupled to the switching station for linking the communication device to the incoming call.

6. In a communication system having a personal communicator with an identification number, a method of processing an inbound call to the personal communicator comprising the steps of:

receiving the inbound call at a switching station;

allocating a meet me port and a port number to the inbound call;

paging the personal communicator and sending the port number; and

the personal communicator accessing the meet me port to respond to the inbound call.

7. The method of claim 6, wherein the step of accessing includes:

the personal communicator locating a telepoint base station; and

requesting that the telepoint base station access the meet me port.

8. The method of claim 6, wherein the step of allocating includes reserving a meet me port number for the inbound call.

9. The method of claim 6, wherein the step of paging includes:

cross referencing the identification number to a paging identification number;

contacting a paging system; and

sending the meet me port number and the pager identification number to the paging system.

10. A method of providing inbound communication from a caller to a wireless communication device having an onboard pager, comprising the steps of:

receiving an inbound communication via a switching station;

paging the wireless communication device;

the communication device linking to a telepoint base station in response to the page;

contacting the switching station via the telepoint base station; and

linking the inbound communication with the communication device.

FIG.1

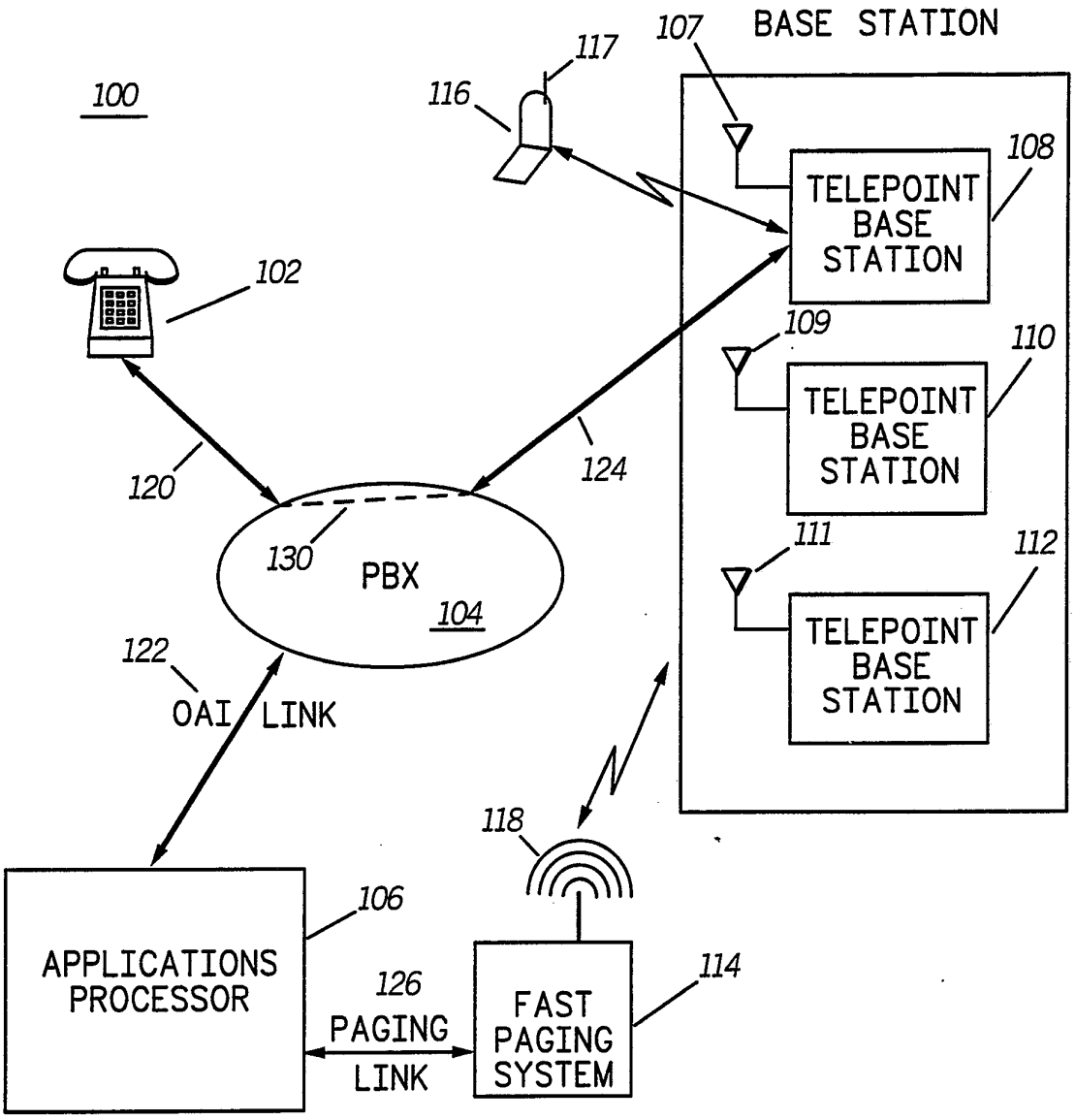
100
BASE STATION
107
117
116
108
TELEPOINT BASE STATION
102
109
110
TELEPOINT BASE STATION
120
124
130
PBX
104
111
112
TELEPOINT BASE STATION
122
OAI LINK
118
106
APPLICATIONS PROCESSOR
126
PAGING LINK
FAST PAGING SYSTEM
114

FIG.2

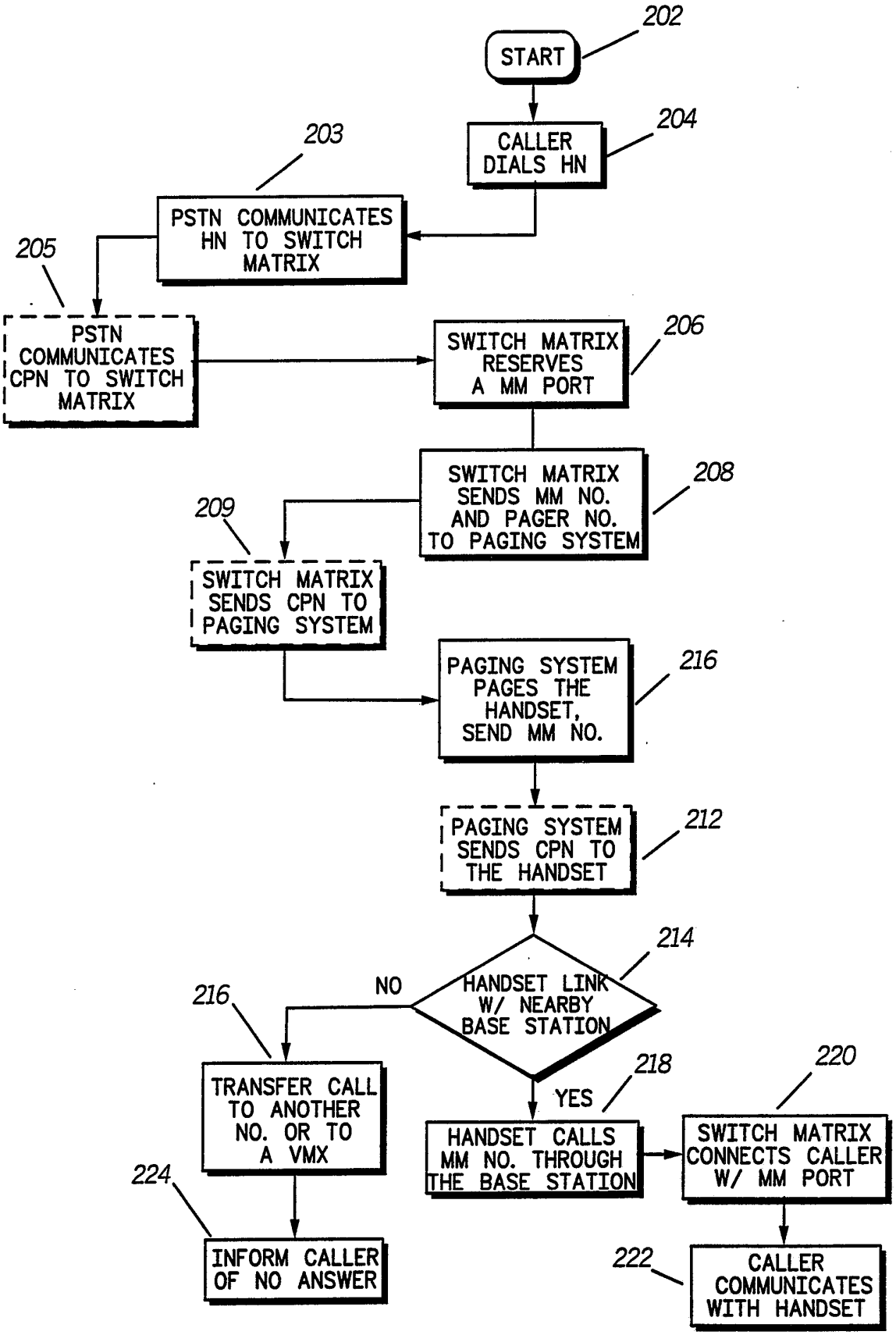
202
START
204
CALLER DIALS HN
203
PSTN COMMUNICATES HN TO SWITCH MATRIX
205
PSTN COMMUNICATES CPN TO SWITCH MATRIX
206
SWITCH MATRIX RESERVES A MM PORT
208
SWITCH MATRIX SENDS MM NO. AND PAGER NO. TO PAGING SYSTEM
209
SWITCH MATRIX SENDS CPN TO PAGING SYSTEM
216
PAGING SYSTEM PAGES THE HANDSET, SEND MM NO.
212
PAGING SYSTEM SENDS CPN TO THE HANDSET
214
HANDSET LINK W/ NEARBY BASE STATION
NO
216
TRANSFER CALL TO ANOTHER NO. OR TO A VMX
224
INFORM CALLER OF NO ANSWER
YES
218
HANDSET CALLS MM NO. THROUGH THE BASE STATION
220
SWITCH MATRIX CONNECTS CALLER W/ MM PORT
222
CALLER COMMUNICATES WITH HANDSET

FIG.3

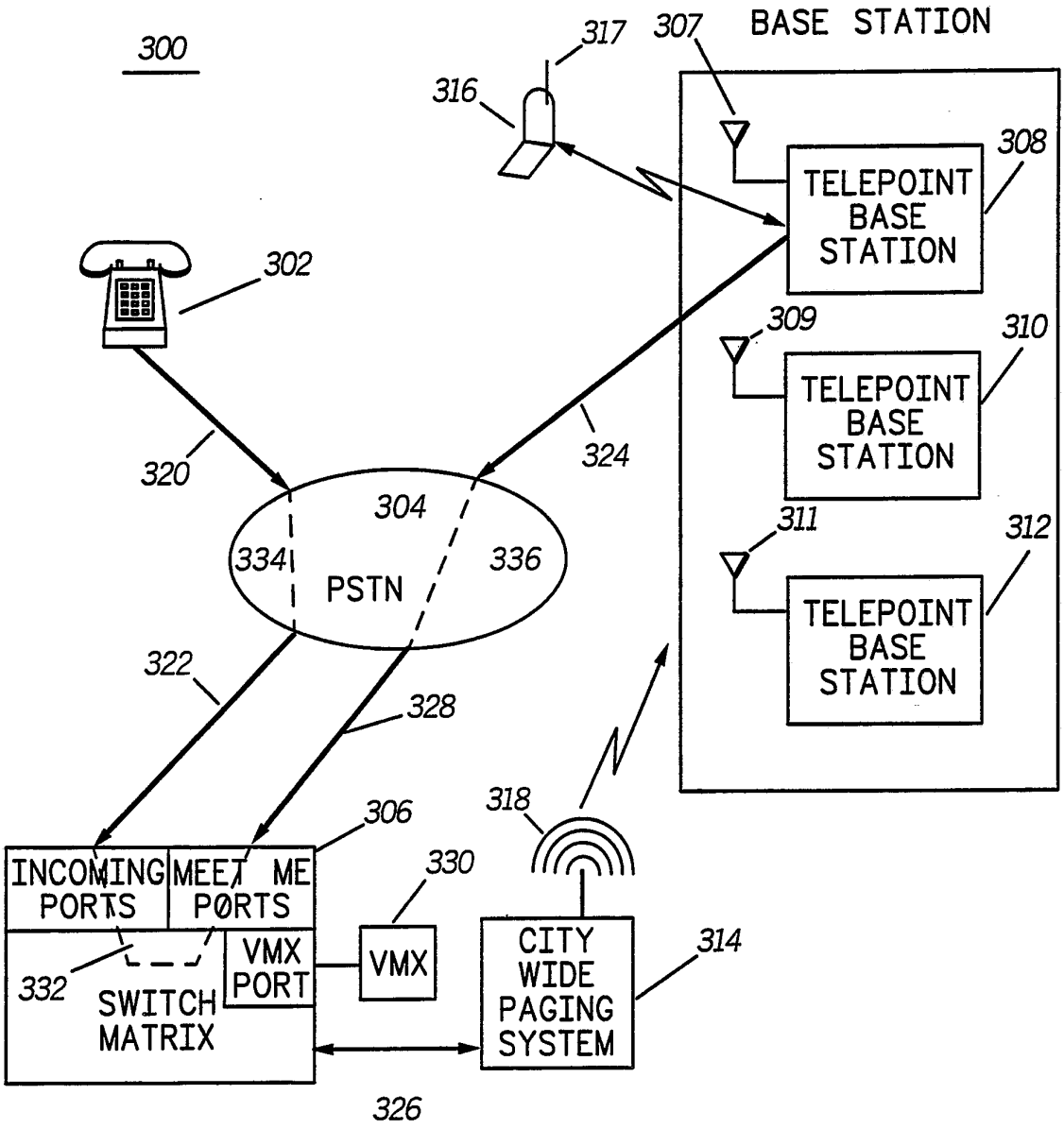
300
317
307
BASE STATION
316
308
TELEPOINT BASE STATION
302
309
310
TELEPOINT BASE STATION
320
324
304
334
336
PSTN
311
312
TELEPOINT BASE STATION
322
328
318
306
INCOMING PORTS
MEET ME PORTS
330
VMX PORT
VMX
332
SWITCH MATRIX
CITY WIDE PAGING SYSTEM
314
326

FIG. 4a

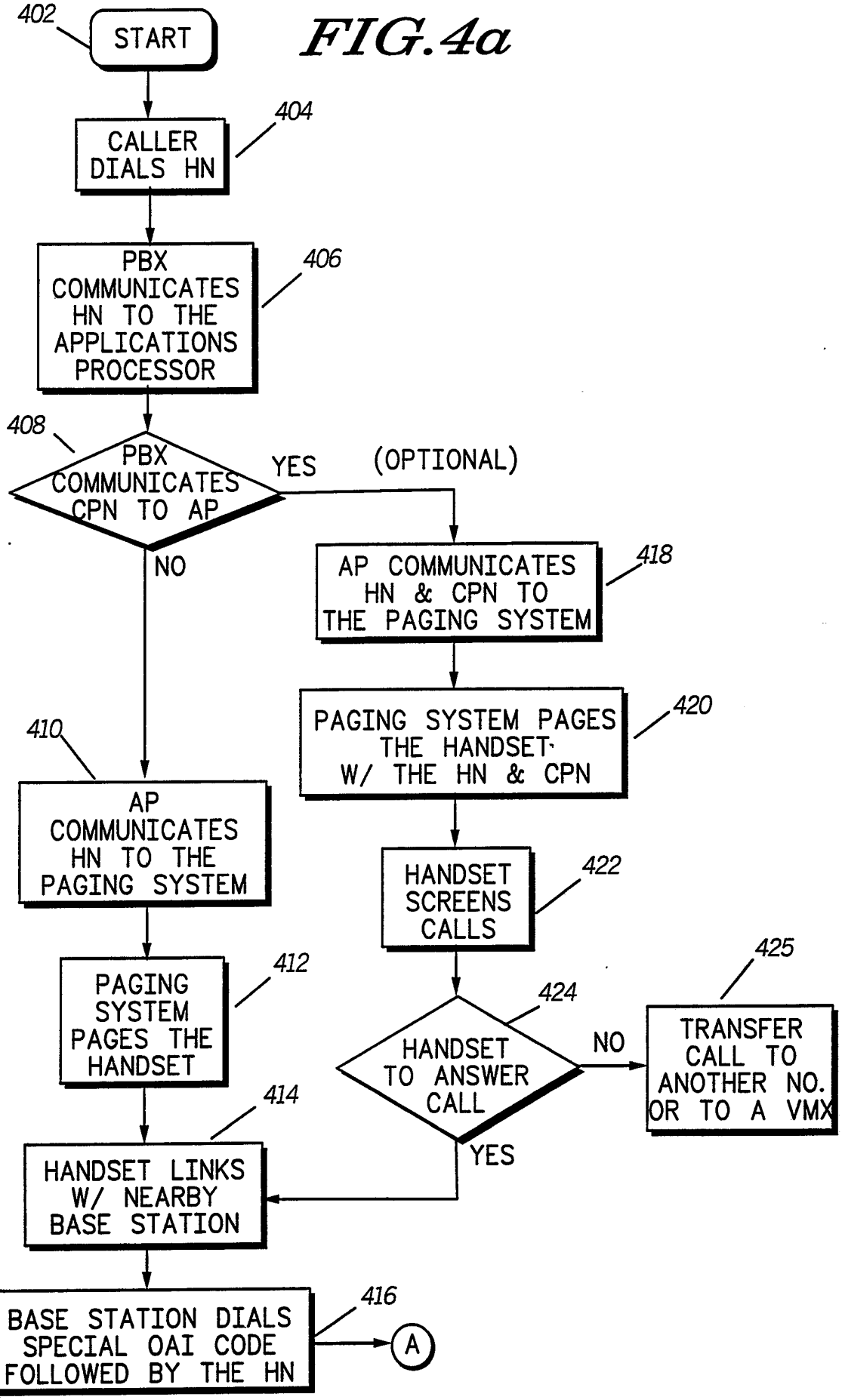
402
START
404
CALLER DIALS HN
406
PBX COMMUNICATES HN TO THE APPLICATIONS PROCESSOR
408
PBX COMMUNICATES CPN TO AP
YES
(OPTIONAL)
NO
418
AP COMMUNICATES HN & CPN TO THE PAGING SYSTEM
420
PAGING SYSTEM PAGES THE HANDSET W/ THE HN & CPN
410
AP COMMUNICATES HN TO THE PAGING SYSTEM
422
HANDSET SCREENS CALLS
412
PAGING SYSTEM PAGES THE HANDSET
424
HANDSET TO ANSWER CALL
NO
425
TRANSFER CALL TO ANOTHER NO. OR TO A VMX
YES
414
HANDSET LINKS W/ NEARBY BASE STATION
416
BASE STATION DIALS SPECIAL OAI CODE FOLLOWED BY THE HN
A

FIG. 4b

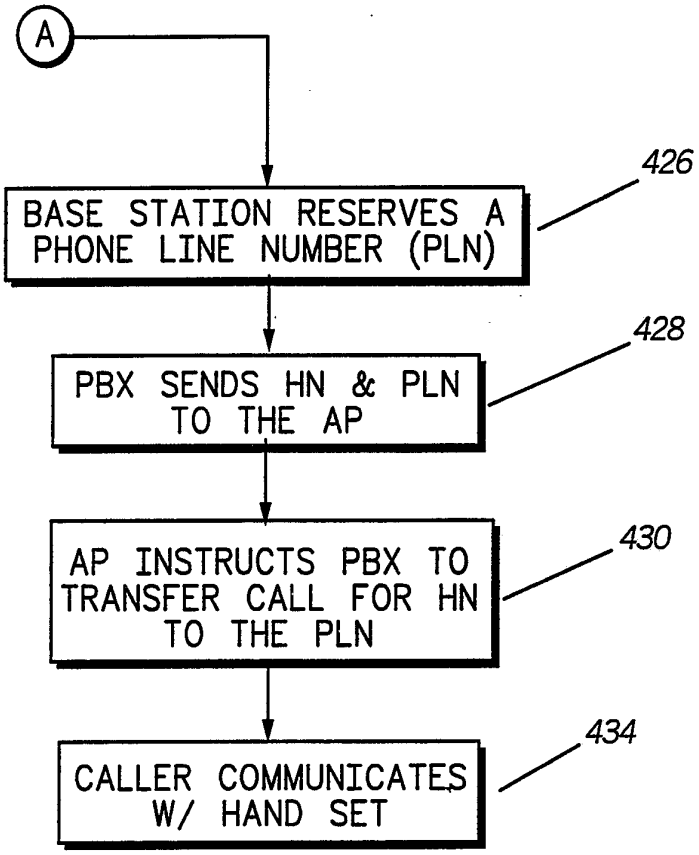
A
BASE STATION RESERVES A PHONE LINE NUMBER (PLN)
426
PBX SENDS HN & PLN TO THE AP
428
AP INSTRUCTS PBX TO TRANSFER CALL FOR HN TO THE PLN
430
CALLER COMMUNICATES W/ HAND SET
434

INTERNATIONAL SEARCH REPORT

International application No.
PCT/US92/07093

A. CLASSIFICATION OF SUBJECT MATTER

IPC(5) :H04M 11/00
US CL :379/57

According to International Patent Classification (IPC) or to both national classification and IPC

B. FIELDS SEARCHED

Minimum documentation searched (classification system followed by classification symbols)

U.S. : 379/57, 58, 61

Documentation searched other than minimum documentation to the extent that such documents are included in the fields searched

Electronic data base consulted during the international search (name of data base and, where practicable, search terms used)

none

C. DOCUMENTS CONSIDERED TO BE RELEVANT

Category*	Citation of document, with indication, where appropriate, of the relevant passages	Relevant to claim No.
Y,P	US, A, 5,090,051 (MUPPIDI ET AL.) 18 February 1992, see entire document with particular note to col. 1, lines 34-41.	1, 3-10
Y	US, A, 5,040,204 (SASAKI ET AL.) 13 August 1991, see Figures 8 and 9 and col. 7, line 25 to col. 8, line 7.	1, 3-10
Y	US, A, 4,961,216 (BAEHR ET AL.) 02 October 1990, see Abstract.	2

☐ Further documents are listed in the continuation of Box C. ☐ See patent family annex.

*	Special categories of cited documents:	"T"	later document published after the international filing date or priority date and not in conflict with the application but cited to understand the principle or theory underlying the invention
"A"	document defining the general state of the art which is not considered to be part of particular relevance	"X"	document of particular relevance; the claimed invention cannot be considered novel or cannot be considered to involve an inventive step when the document is taken alone
"E"	earlier document published on or after the international filing date	"Y"	document of particular relevance; the claimed invention cannot be considered to involve an inventive step when the document is combined with one or more other such documents, such combination being obvious to a person skilled in the art
"L"	document which may throw doubts on priority claim(s) or which is cited to establish the publication date of another citation or other special reason (as specified)	"&"	document member of the same patent family
"O"	document referring to an oral disclosure, use, exhibition or other means		
"P"	document published prior to the international filing date but later than the priority date claimed		

Date of the actual completion of the international search 17 SEPTEMBER 1992	Date of mailing of the international search report 21 DEC 1992
Name and mailing address of the ISA/ Commissioner of Patents and Trademarks Box PCT Washington, D.C. 20231 Facsimile No. NOT APPLICABLE	Authorized officer Diane Moffett for GEORGE J. OEHLING VSH Telephone No. (703) 305-4760

Form PCT/ISA/210 (second sheet)(July 1992)*