March 1, 1966 E. C. CROWTHER 3,238,496

ELECTRICAL CONNECTORS

Original Filed Sept. 21, 1959

Fig. 1

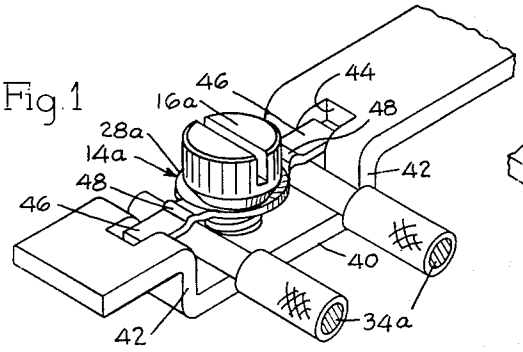

Fig. 2

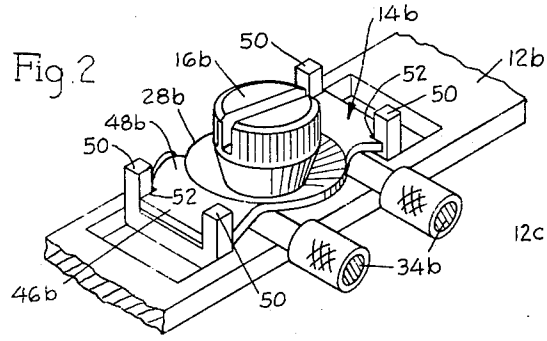

Fig. 3

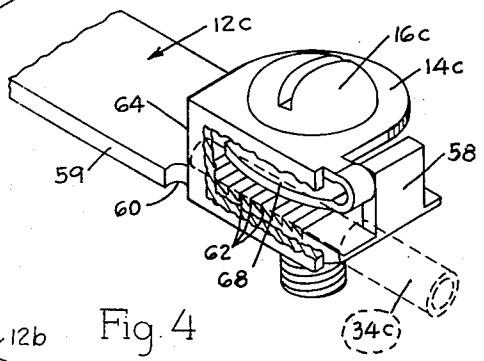

Fig. 4

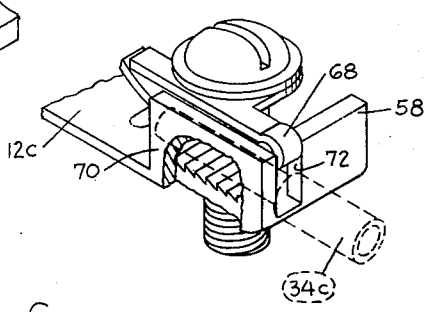

Fig. 5

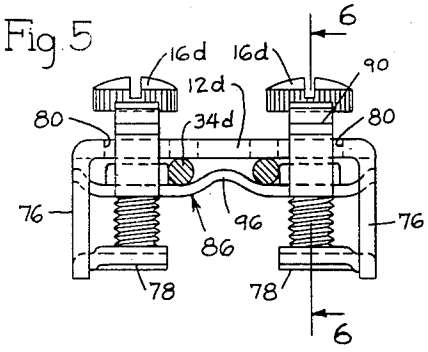

Fig. 6

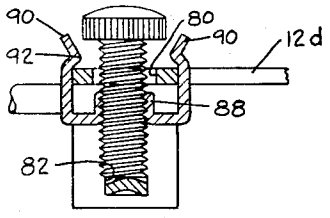

Fig. 7

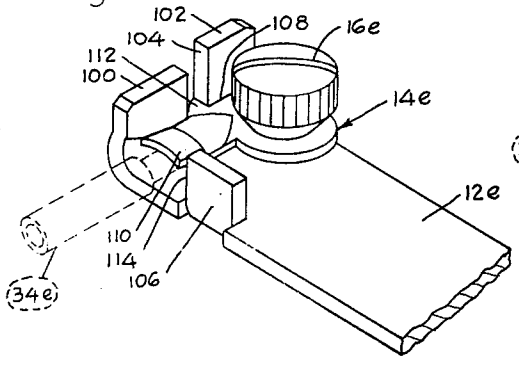

Fig. 8

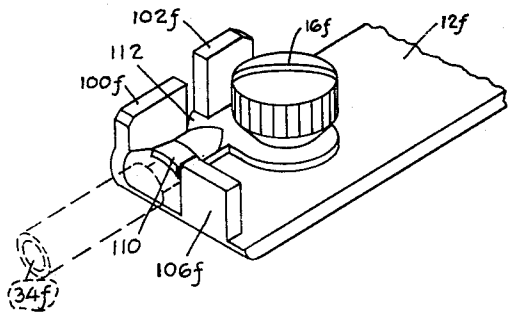

INVENTOR.

Edmond C. Crowther

BY Robert W. Beart

atty's.

United States Patent Office

3,238,496

Patented Mar. 1, 1966

3,238,496

ELECTRICAL CONNECTORS

Edmond C. Crowther, Philadelphia, Pa.
(Bradenton Manor, Bradenton, Fla.)

Application Apr. 17, 1962, Ser. No. 188,021, now Patent No. 3,173,741, dated Mar. 16, 1965, which is a division of application Ser. No. 841,212, Sept. 21, 1959, now Patent No. 3,068,445, dated Dec. 11, 1962. Divided and this application Jan. 29, 1965, Ser. No. 428,978
2 Claims. (Cl. 339—246)

This application is a division of my copending application, Serial No. 188,021, filed April 17, 1962, now Patent No. 3,173,741, dated March 16, 1965, which was a division of my application, Serial No. 841,212, filed on September 21, 1959, now Patent No. 3,068,445, dated December 11, 1962.

This invention relates to an electrical connector, More specifically, it relates to an electrical connector wherein a device of the type commonly known in the art as a "bus bar" is mechanically formed so that, when used in combination with other elements, it will accept lead wires or secondary conductors and removably retain same in direct contact with the material of the bus bar.

Heretofore, metallic connectors employed for electrically connecting primary conductors of current, such as bus bars, with the secondary wire conducting means have been complex in nature. Undue resistance to the passage of electrical current between the source and the end conductor is often present in such connectors. In addition, their complexity has provided inherent problems to the persons making the initial assembly, as well as those who were called upon to utilize the connector in repair work.

It is a primary object of this invention to provide an improved electrical connector which may be partially formed from the basic conductor or bus bar. It is a further object of this invention to provide a connector which has improved electrical conductivity properties. Still another object of this invention is to provide an electrical connector which is simple in operation and economical to manufacture.

Further objects of this invention will become apparent to those skilled in the art when the specification is read in conjunction with the accompanying drawings wherein:

FIG. 1 is a perspective view of an embodiment of the present invention;

FIG. 2 is a perspective view of another embodiment of the present invention;

FIG. 3 is a perspective view in partial section of still another embodiment of the present invention;

FIG. 4 is a modification of the invention and of the embodiment shown in FIG. 3 and is disclosed in perspective and partially sectioned;

FIG. 5 is still another embodiment of the present invention shown in elevation;

FIG. 6 is a partial sectional view taken along line **6—6** of FIG. 5;

FIG. 7 is a perspective view of a further modification to the present invention;

FIG. 8 is a perspective view of a modification of the embodiment of this invention shown in FIG. 7.

Referring now to the drawing, an embodiment of the invention is shown in FIG. 1 wherein similar numerals will be used to indicate similar parts with the addition of

suffix "*a*." In this embodiment the base **12***a* is deformed intermediate its length to form a U-shaped portion having a bottom **40** provided with a central screw threaded aperture and upwardly extending arms **42** joined to the base **12***a*. Extending longitudinally of each arm **42** is a slot **44** which bisects the juncture of the arms **42** with the bus bar **12***a*, and extends downwardly substantially to the juncture of arms **42** and bottom **40**.

Extending between arms **42** and riding within slots **44** is the clamp **14***a*. The clamp **14***a* includes a dished central section **28***a* and a pair of laterally extending arms **46** which are of a width slightly less than the width of slots **44** so that the clamp **14***a* is free to ride up and down relative to the base **40** but is incapable of rotation relative thereto. Intermediate the length of each arm **46**, there is provided a transversely extending rib **48**. The screw **16***a* in this embodiment has a conical clamping surface for engagement with the concave side of central dished portion **28***a* and can be rotatably assembled to clamp **14***a* by any suitable means such as an annular rib or shoulder **32***a*.

The operation of this embodiment is accomplished by the insertion of wires **34***a* between the arms **46** and the bottom **40** with positive location of the wires being insured by the transverse ribs **48**. This device, like the first embodiment, is capable of accepting wires of dissimilar diameters by means of limited canting between the central portion **28***a* of claim **14***a* and the conical undersurface of the head of the screw **16***a*.

Referring now to FIG. 2, wherein a tertiary embodiment of the invention is disclosed and wherein similar numerals are utilized to designate similar parts with the addition of the suffix "*b*." The bus bar **12***b* is provided with two pairs of upstanding post-like members **50** spaced apart along the longitudinal axis of **12***b* on opposite sides of a centrally located screw-threaded aperture. The posts **50** can be struck from within the margins of the material of the bus bar **12***b*, as shown in the present instance, or may be fabricated separately and suitably secured thereto as by welding or brazing.

The clamp **14***b* has a central conical section **28***b* and a pair of laterally extending relatively broad arms **46***b* having a transverse rib **48***b*. Each of the corners of the arms **46***b* is notched as at **52** to accommodate the post **50** for vertical movement relative thereto and prevents rotation of the clamp **14***b* relative to the bus bar **12***b*. The screw **16***b* is provided with the same physical characteristics as the screw in the other embodiments and is rotatably assembled to the clamp **14***b* so that said clamp can be jacked relative to the bus bar **12***b*. The wires **34***b* are accommodated between the transverse ribs **48***b* and the upper surface of the bus bar **12***b* so that a positive and complete contact between the basic conductor bus bar **12***b* and the secondary conductors **34***b* is assured.

A modification of the present invention is shown in FIGS. 3 and 4 wherein similar parts bear similar numerals with the addition of the suffix "*c*." The bus bar **12***c*, in the form shown in FIG. 3 has an upstanding flange **58** positioned at its free extremity and offset from one longitudinal edge **59** thereof. Said longitudinal edge **59** is relieved as at **60** with the upper surface of the bus bar **12***c* along said longitudinal edge being coined or otherwise deformed to provide a plurality of transversely extending ribs or teeth **62**. In their preferred form, the

teeth **62** extend in opposition to the end of the bus bar **12***c* where flange **58** is located. The clamp **14***c* in this modification is substantially flat through its upper extent and has a depending flange **64** adapted to be accommodated in the relieved portion **60** of the bus bar **12***c*. A spring finger **68** extends outwardly and thence downwardly and under the clamp **14***c* in a position substantially parallel to the downwardly extending flange **64** in juxtaposed relation to the teeth **62**. The screw **16***c* is suitably rotatably assembled to the clamp **14***c* and is telescopically associated with a threaded aperture in the bus bar **12***c*, said aperture being positioned laterally of the toothed portion **62** and axially spaced from flange **58**. A wire **34***c*, shown in phantom in this figure for purposes of clarity in illustration, is accommodated in the passageway formed by the depending flange **64**, the toothed surface **62**, the spring finger **68** and the screw **16***c*. Actuation of the screw **16***c* results in a deformation of the spring finger **68** as it clamps the wire **34***c* against the ribbed or toothed portion **62**.

The modification to this invention shown in FIG. 4 is substantially identical to that shown in FIG. 3 with the exception that downwardly depending flange **64** is eliminated from the clamp in this modification and an upwardly extending flange **70** is provided along the longitudinal edge of bus bar **12***c* forming an aperture or slot **72** between flange **58** and flange **70** which accepts and captures the outwardly extending end of the spring finger **68** thereby preventing rotation of the clamp **14***c* relative to the base or bus bar **12***c*.

A further embodiment of the present invention is disclosed in FIGS. 5 and 6 wherein similar parts bear similar numerals with the addition of the suffix "*d*." The bus bar **12***d* at its free extremity is formed downwardly along its longitudinal edges to create an inverted "U." The downwardly depending arms **76** in this embodiment have struck from within their margins a pair of opposed inwardly directed stops or shoulder means **78** which are transversely ribbed along their axial extent with the convex surface directed upwardly towards the bus bar **12***d*. Within the margins of bus bar **12***d* in opposition and in registry with the stops **78** are a pair of spaced unthreaded apertures **80**. The depending arms **76** are slotted as at **82** where the material is removed therefrom to form the stops **78**.

Extending between the depending arms **76** and accommodated within the slots **82** is an elongated spring clip device **86** having a pair of spaced threaded apertures **88** in registry with the apertures **80**. Extending upwardly, as seen in the drawing, from opposite sides of device **86** are a plurality of opposed spring arms **90** having shoulder means **92** directed inwardly in opposition from each of the opposed spring arms **90**. These embrace the lateral extensions of bus bar **12***d* and secure device **86** in movable assembled relationship to bus bar **12***d*. Operators or screws **16***d* are telescopically associated with apertures **80**, and threaded apertures **88** until their free extremities are brought into contact with the upper bearing surfaces of stops **78**. To insure proper lateral spacing between the wires **34***d*, the central portion of device **86** is arched as at **96**. Operation of the screw **16***d* results in a vertical movement of the device **86** towards the bus bar **12***d* until the wires **34***d* are securely clamped between the device **86** and the undersurface of bus bar **12***d*. To insure adequate clamping of the wires **34***d*, regardless of diameter, the hubs around aperture **88** are of such external size as to be smaller than the unthreaded aperture **88** and acceptable therewithin whereby even the smallest of wires can be clamped between device **86** and the undersurface of bus bar **12***d*.

A further modification of the invention for the acceptance of a single wire is shown in FIGS. 7 and 8. The difference between the two forms illustrated being that one is adapted to accept the wire from the end of the bus bar and the other is adapted to accept the wire transversely to the longitudinal axis of the bus bar. In this embodiment similar numerals shall be used for similar parts with the addition of the suffix "*e*." The transverse form shown in FIG. 7 includes a bus bar **12***e* having a pair of spaced apart upwardly directed flanges **100** and **102** respectively which form a slot **104** between the flanges. A third upwardly directed flange **106** is positioned along an adjacent longitudinal edge of bus bar **12***e* in spaced relation to the free end which accommodates flanges **100** and **102**. A screw threaded aperture is provided in bus bar **12***e* adjacent to but spaced from flange **102** for the telescopic rotary acceptance of the screw threaded fastener **16***e*.

Rotatably assembled to screw **16***e* in the same fashion as the previous embodiments is the clamp means **14***e*. Clamp **14***e* is substantially flat and has at least one straight edge **103** for cooperative engagement with a complementary flange such as **102**. Extending outwardly from and in the same direction as the straight edge **108** is a transversely arched extension **110**. A second finger or extension **112** is positioned intermediate the extremities of straight edge **108** and extension **110** and is adapted to be accepted in slot **104**. Thus, in assembled relation, the clamp means **14***e* as rotatably assembled to screw **16***e* presents a complementary straight edge **108** against the inner surface of flange **102**, extension **112** projects into slot **104** and transversely arched extension **110** lies along the edge of flange **100** and extends into slot **114** between flanges **100** and **106**. The introduction of a wire **34***e*, shown in phantom for purposes of clarity in illustration, between the flanges **100** and **106** respectively and under arched extension **10** and on top of bus bar **12***e* results in a firm contact of said wire **34***e* with the upper surface of **12***e* when the screw **16***e* is tightened downwardly.

The modification or rotation of the embodiment shown in FIG. 7 is clearly disclosed in FIG. 8 wherein similar numerals are utilized to identify similar parts with the addition of the suffix "*f*." The operation and arrangement of parts in this modification are substantially identical to those shown in FIG. 7 with the exception that the wire is introduced along the longitudinal axis of the bus bar **12***f* as opposed to the transverse introduction shown in FIG. 7.

The embodiments of this invention have disclosed devices which retain simplicity of operation since the clamp means can be jacked away from the bus bar by mere rotation of the operator or screw whereby the personnel installing the wires do not have to physically manipulate these connectors in any fashion other than by rotation of the screw. The devices are economical to manufacture since they can be made from stamped parts and are ideally suited for use in close, tight quarters.

While modifications or embodiments of this invention will be apparent to those skilled in the art, it is not intended that it should be limited in any fashion except by the appended claims.

1. An electrical connector including a bus bar having a threaded aperture and upstanding portions on each side of said aperture, a rotary screw threaded fastener engageable by said threaded aperture, clamping means rotatably assembled with said fastener and having a conical central portion with aperture and a pair of arms extending laterally from said apertured central portion, the terminal portions of said pair of arms being received by said upstanding portions of said bus bar to prevent relative rotation therebetween, the intermediate portions of said pair of arms adapted to substantially conform to the upper surfaces of wire conductors for preventing lateral shifting of said wire conductors interposed between said clamping means and said bus bar.

2. The electrical connector of claim **1** in which the upstanding portions of said bus bar constitute the arms of a "U"-shaped section in said bus bar.

(References on following page)

References Cited by the Examiner

UNITED STATES PATENTS

264,298	9/1882	Johnson	339—249
1,386,634	8/1921	Kruse	339—246 X
1,635,200	7/1927	Zilliox	339—246 X
1,689,080	10/1928	Nero	339—266
1,955,283	4/1934	Goetzelman	339—266
2,136,366	11/1938	Martin	339—266
2,249,471	7/1941	Hamm et al.	339—266

FOREIGN PATENTS

812,562	9/1951	Germany.
220,315	11/1942	Switzerland.

JOSEPH D. SEERS, *Primary Examiner.*

ALBERT H. KAMPE, *Examiner.*

R. E. MOORE, *Assistant Examiner.*