Oct. 8, 1929. T. M. AVERY 1,731,188

ELECTRIC SWITCH

Filed July 22, 1921 2 Sheets-Sheet 1

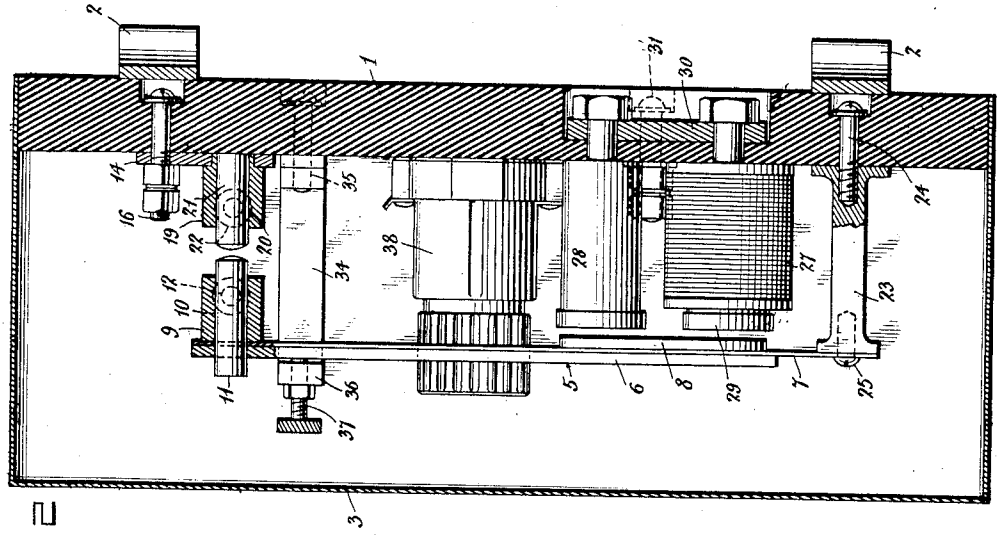

Fig. 2

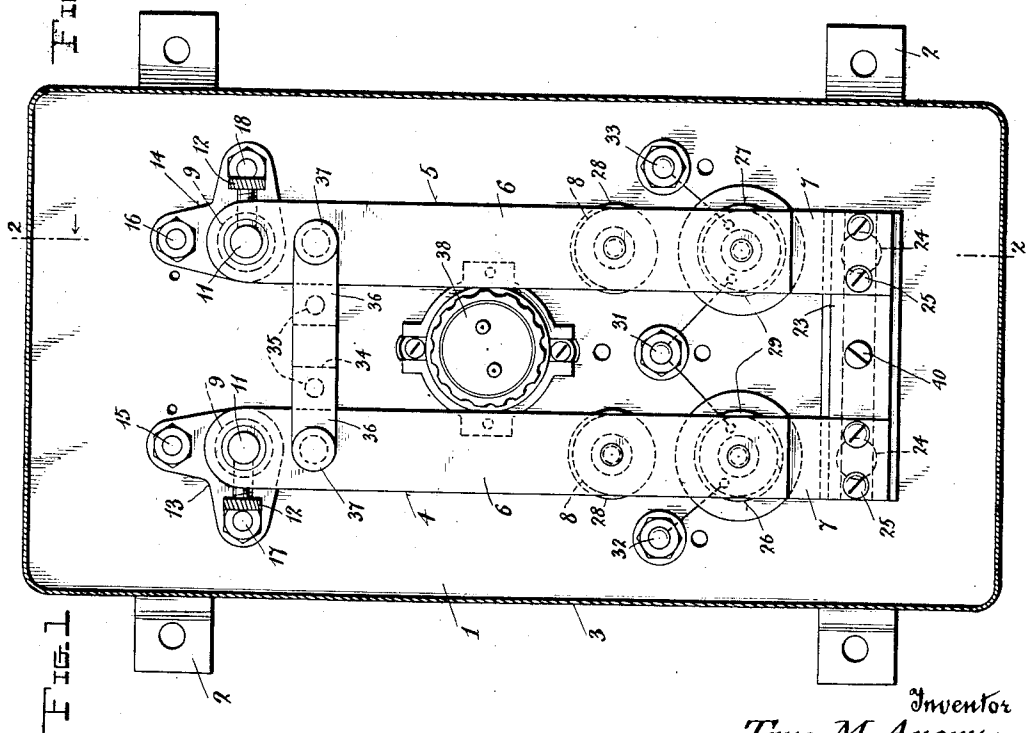

Fig. 1

Inventor
True M. Avery,
by James L. Norris
Attorney.

Oct. 8, 1929. T. M. AVERY 1,731,188

ELECTRIC SWITCH

Filed July 22, 1921 2 Sheets-Sheet 2

Fig. 3

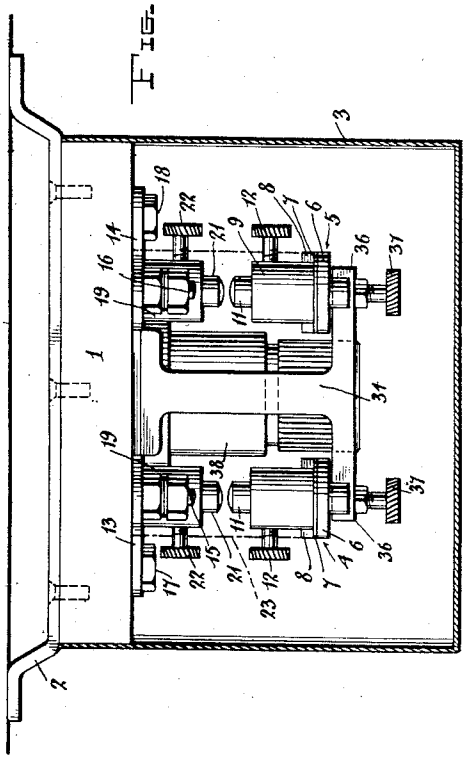

Fig. 4

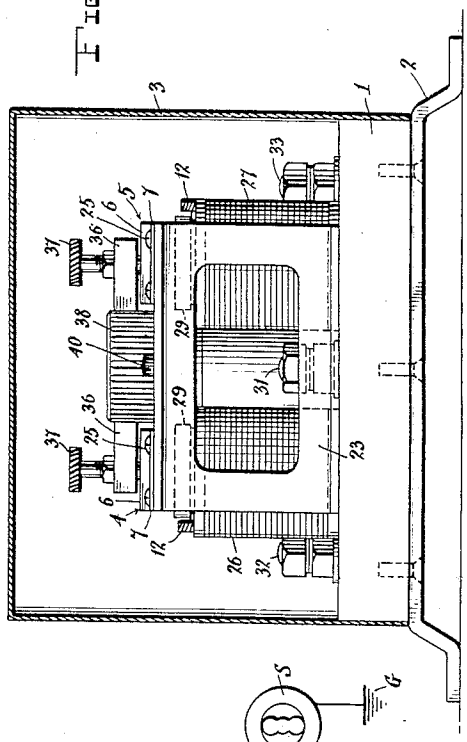

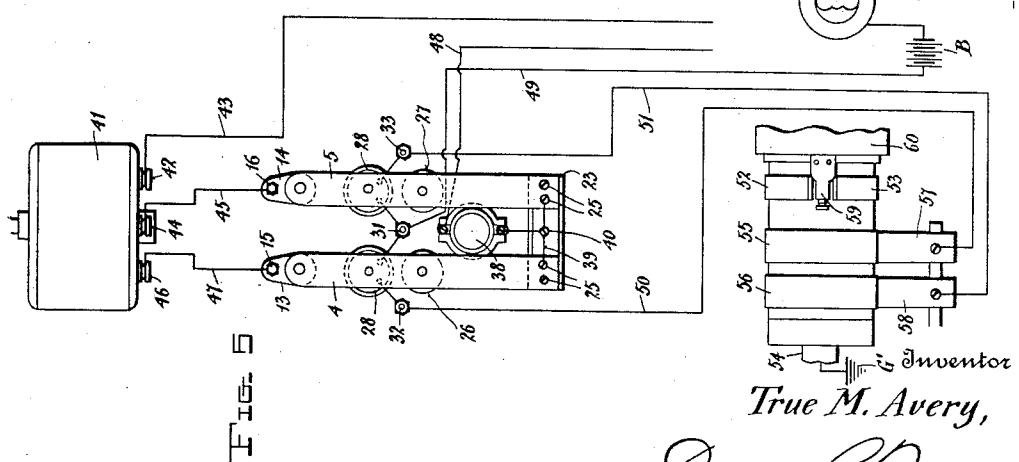

Fig. 5

Inventor
True M. Avery,
By James L. Norris
Attorney

Patented Oct. 8, 1929 1,731,188

UNITED STATES PATENT OFFICE

TRUE M. AVERY, OF GLENS FALLS, NEW YORK, ASSIGNOR TO UNION BAG & PAPER CORPORATION, OF NEW YORK, N. Y., A CORPORATION OF NEW YORK

ELECTRIC SWITCH

Application filed July 22, 1921. Serial No. 486,740.

The present invention relates to improvements in electric switches or relays and more particularly to those of the kind used for controlling the operation of a reversible electric motor.

The primary object of the invention is to provide a novel and improved switch or relay of this kind which is capable of acting quickly and, if necessary, at frequent intervals in response to a suitable controlling device, to supply current to a reversible electric motor to cause running thereof in either forward or reverse direction, the motor circuit-controlling contacts being adjustable, whereby the gaps between them may be reduced to a minimum, and electro-magnetic devices operative in response to the controlling device serving to so control the motor contacts that the direction of running of the motor will be changed immediately or the running of the motor initiated or interrupted promptly, as demanded by the controlling device, thus enabling a very close regulation of the motor to be obtained.

To these and other ends, the invention consists in certain improvements and combinations and arrangements of parts, all as will be hereinafter more fully described, the features of novelty being pointed out particularly in the claim at the end of the specification.

In the accompanying drawings:—

Figure 1 represents a front elevation of an electric switch or relay constructed in accordance with the preferred embodiment of the invention;

Figure 2 represents a vertical section through the switch or relay on the line 2—2 of Figure 1;

Figure 3 is a top plan view of the switch or relay as shown in Figure 1;

Figure 4 is a bottom plan view of the switch shown in Figure 1; and

Figure 5 represents diagrammatically a controlling system employing the switch or relay as an element thereof.

Electric switches or relays embodying the present invention are applicable generally to all installations where it is desirable or necessary to control the operation of an electric motor and especially a reversible electric motor. The invention is particularly applicable to regulating or controlling systems, wherein the electric motor is employed as a regulating or compensating means, the switch or relay when used in such systems securing prompt response of the motor to the device which controls it. In the present instance, the switch or relay is shown generally as applied to a system for controlling the speed of a web of paper or other material travelling through a paper bag making machine or the like, for the purpose of maintaining correct registration between the travelling web and a device or mechanism in the machine which operates on the web, substantially as illustrated and described in my Patent No. 1,517,099, granted November 25, 1924. It is to be understood, however, that the invention is not restricted to this particular use and also that the invention is not restricted to the precise construction shown, as other uses for the invention will suggest themselves and equivalent constructions are contemplated, and these will be included within the scope of the claim.

In the present instance, the switch or relay comprises a base 1 of fibre or other suitable insulating material, this base having brackets 2 secured to its rear side and which serve to support the switch or relay on a wall, the frame of a machine or the like, it being preferable to so mount the switch or relay that the base 1 occupies an upright position. A removable cover 3 is preferably fitted to the base 1 to normally enclose and thus protect the operative elements of the switch.

The switch comprises a pair of contact blades or arms 4 and 5. Each of these blades or arms is composed preferably of a strip of iron or other rigid material 6, a strip 7 of copper or other relatively yielding or resilient material, a soft iron armature 8 which is secured to the strips 6 and 7, and a contact holder 9 which is fixed to one end of the strips 6 and 7 and contains a socket 10 in which a contact 11 may be fitted adjustably, a clamping screw 12 being provided to secure the contact in proper adjusted position. The base 1 has a pair of terminals 13 and 14 secured

thereon by the terminal screws 15 and 16, which latter extend preferably through the base, as shown, and form binding posts for the respective motor connections. Additional screws 17 and 18 may be provided to assist in securing the terminals 13 and 14 to the base. Each terminal is provided with a contact holder which is formed with a socket 20 to receive a contact 21 and a clamping screw 22 is provided to secure the contact in proper position within its respective holder.

The ends of the blades or arms 4 and 5 opposite to the contact holders are secured to a post or standard 23 which is secured rigidly to the base by a suitable number of screws 24. Preferably, the rigid stiffening strip 6 of each blade terminates short of the post or standard 23 and the relatively yielding or resilient strip 7 of each blade serves to connect the same with the post or standard, under the clamping action of the screws 25.

Electro-magnets 26 and 27 are provided to actuate or control the respective switch blades 4 and 5. Each of these electro-magnets has a core which is preferably in substantially the form of a horse-shoe, the poles of which are presented to the armature 8 on the respective switch blade, in order to secure a strong pull upon the armature when the corresponding electro-magnet is energized by a current of relatively small strength. Preferably and as shown, the core of each electro-magnet comprises a pair of similar parallel pole-pieces 28 and 29 which are connected at the rear of the base 1 by an iron plate 30, these parts forming a core of substantially horse-shoe form with the poles thereof presented to the respective armature. It is also preferable to provide one of these pole-pieces with a winding, as is shown, in order to adapt the electro-magnet to operate under the influence of a current of small strength. When a single winding is used, the pole-piece which is without a winding will become a consequent pole to complete the magnetic circuit with the armature. An intermediate binding post 31, which is common to both electro-magnets, and a pair of binding posts 32 and 33, which are individual to the respective electro-magnets, are preferably provided to enable the necessary connections to be made.

Means is provided for adjusting the gaps between the contacts 11 of the switch blades and the cooperating contacts 21 for the terminals 13 and 14, in order to secure prompt engagement of these contacts when their respective electro-magnets are energized. Preferably and as shown, a post 34 is fixed by the screws 35 or otherwise to the base 1 at a point adjacent to the contact-carrying ends of the switch blades and this post has oppositely-extending arms 36 which overlie the switch blades 4 and 5 and carry set screws 37 which are adjustable in the respective arms of the post and are arranged to bear against the outer sides of the respective switch blades. By this arrangement, the set screws 37 will limit the outward swing of the switch blades, and hence will control the air gap between the armature and the electro-magnet of the respective switch blade, and these set screws will also control the air gaps between the contacts 11 on the respective switch blades and the corresponding relatively fixed contacts 21 on the base. The contacts ordinarily will be adjusted so that this air gap is substantially constant, usually about one-quarter of an inch, thus maintaining constant the distance through which each switch arm must move, in order to engage the respective pair of contacts.

The post or standard 23 is connected to one side of the line circuit from which current is supplied to one or the other of the terminals 13 and 14, through the respective switch blades 4 or 5. Preferably and as shown, the line terminal is connected to one side of a fuse-block 38, the other terminal of which is connected by a conductor 39 to the post or standard 23, by a screw 40.

One example of a practical application of the switch or relay is shown diagrammatically in Figure 5. In this instance, it is employed for the control of an electric motor which functions to compensate for variations in the speed of a travelling web and to thereby maintain, within relatively close limits, correct registration between the web and a device or mechanism which operates thereon. 41 represents a reversible direct current motor of the type using three terminals, the terminal 42 being connected to the conductor 43 which is connected to one side of the line circuit which may supply current at the usual voltage, the terminal 44 of the motor is connected by a conductor 45 to the terminal 14 of the switch, the terminal 46 of the motor is connected by a conductor 47 to the terminal 13 of the switch, and a conductor 48, which is connected to the other side of the line circuit, extends to the fuse-block 38. The electro-magnets which control the switch blades are preferably connected in a separate or local circuit which may be adapted to carry a current of relatively low voltage. As indicated, B represents a battery having a switch S connected therein and one side of this battery is grounded on the frame of the machine on which the system is used, as indicated at G. The conductor 49 of this local circuit leads to the common binding post 31 for the two electro-magnets 26 and 27, this binding post being connected to one terminal of each electro-magnet winding. The other terminals of the electro-magnets which are connected to the binding posts 32 and 33 respectively, are connected by conductors 50 and 51 to the controlling device to which the switch responds. In the present instance, this controlling device, as is fully shown and described in my

application hereinbefore referred to, comprises a pair of contacts 52 and 53 which are mounted on a shaft 54, so that they will be revolved in definite timed relation to the speed of operation of the device or mechanism which is to be registered with the web, these contacts being connected respectively to collector rings 55 and 56, and the conductors 50 and 51 being connected to brushes 57 and 58 which constantly engage the respective collector rings, and a controlling contact 59 which is carried by a sprocket 60, which is freely rotatable relatively to the contacts 52 and 53 and is driven in accordance with the actual speed of the web, is caused to engage one or the other of the contacts 52 or 53, when variations in speed occur between the contacts 52 and 53 and the contact 59. The contact 59 is grounded on the frame of the machine, as indicated at G', through the shaft 54.

The mode of operation of the system thus described is briefly as follows:—When the controlling contact 59 is in a neutral position between the contacts 52 and 53, the local circuit of the switch will be open and, in consequence, the motor circuit through the conductors 45 and 47 will be open, and hence the motor will be at rest. Should the speed of the web accelerate relatively to the speed of operation of the device or mechanism which is timed with the shaft 54, the contact 59 will engage the contact 52, thus completing the local circuit through the electro-magnet 26, in consequence of which the switch blade 4 will be actuated to engage its contacts 11 and 21, and the motor circuit will then be completed through the conductor 47. The motor will then run in one direction, and through the medium of the compensating mechanism which is fully shown and described in my application above referred to, it will retard the speed of advance of the web. Should the speed of the web become retarded relatively to the speed of operation of the device or mechanism which is timed with the shaft 54, the controlling contact 59 will engage the contact 53 and the local circuit will then be closed through the electro-magnet 27, in consequence of which the switch blade 5 will be actuated to engage its contacts 11 and 21, thus completing the motor circuit through the conductor 45. The motor will then run in an opposite direction, and through the medium of compensating mechanism as above referred to, the speed at which the web is advanced through the machine will be accelerated. As soon as the necessary correction has been made in the speed of the web, the controlling contact 59 will resume a neutral position between the contacts 52 and 53 and the motor circuit will be broken through the conductors 45 and 47.

It is to be understood that the switch members have a normal tendency to disengage the contacts when said members are not attracted by their electro-magnets. By mounting the switch in upright position so that the switch members are arranged vertically or substantially so, the switch members may be so balanced that a very delicate force will be sufficient to attract them and thereby cause engagement of the contacts.

By arranging the electro-magnets in close proximity to the pivotal points of the switch blades and the motor-controlling contacts at the free ends thereof and remote from their pivotal points, quick action is secured in the contact engaging and disengaging operations, and this action is assisted, to a great extent, by the regulating screws which regulate the air gaps between the contacts within relatively close limits, with the result that the motor or other device controlled by the switch will respond instantly to the demands of the controlling device. The switch will therefore insure close and correct regulation when used in a regulating system, and furthermore, it is adapted for use in situations where the switch is required to operate frequently or at relatively close intervals.

I claim as my invention:—

An electric relay switch comprising a rigid vertically disposed approximately gravity-balanced vibratory switch member flexibly supported at its lower end and carrying a circuit-controlling contact at its upper end, a fixed circuit-controlling contact mounted at one side of said member to be engaged by the contact thereon when said member moves in one direction, an electro-magnet located at the same side of said switch member at which said fixed contact is located and operative, when energized, to move said member immediately in a direction and to an extent sufficient to cause engagement of said contacts, and a stop mounted at the side of the switch member opposite to that side at which the electro-magnet and fixed contact are located, the switch member having a normal tendency to rest against said stop, one of said contacts being adjustable in a direction toward or from the other contact to determine the gap between said contacts when the switch member rests against said stop and to space the switch member from the electro-magnet when said member is in attracted position, and said stop being adjustable to limit the retraction of the switch member and to determine the gap between said contacts and also the gap between the switch member and the electro-magnet when the switch member is in released position.

In testimony whereof I have hereunto set my hand.

TRUE M. AVERY.