W. G. POTTER.

MECHANISM FOR STOPPING ENGINES.

APPLICATION FILED JUNE 8, 1912.

1,068,699.

Patented July 29, 1913.

2 SHEETS—SHEET 1.

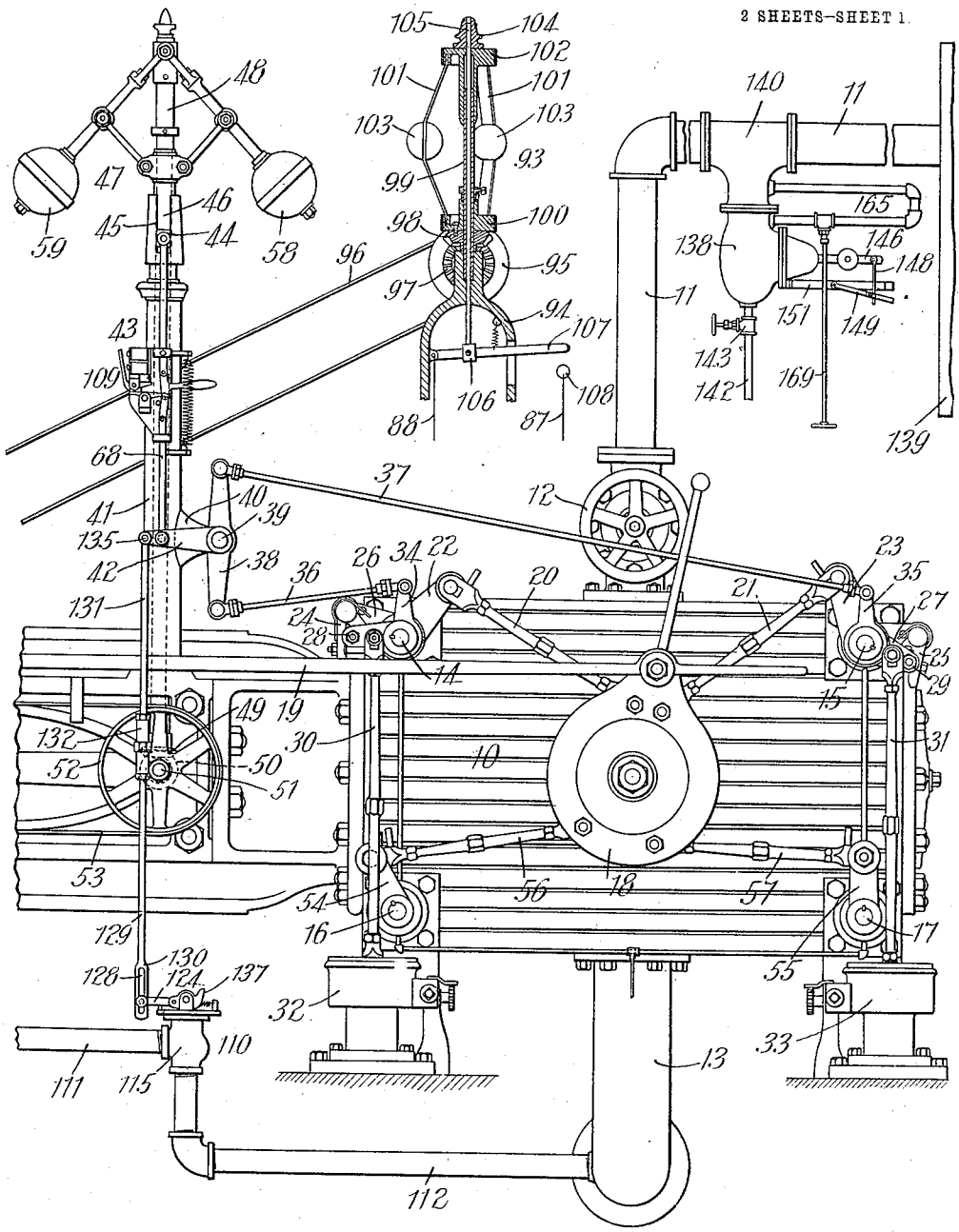

Fig. 1.

Witnesses.
Franklin E. Low
Leonard A. Powell.

Inventor:
William G. Potter
by his attorney,
Charles S. Goodwin.

COLUMBIA PLANOGRAPH CO., WASHINGTON, D. C.

W. G. POTTER.

MECHANISM FOR STOPPING ENGINES.

APPLICATION FILED JUNE 8, 1912.

1,068,699.

Patented July 29, 1913.

2 SHEETS—SHEET 2.

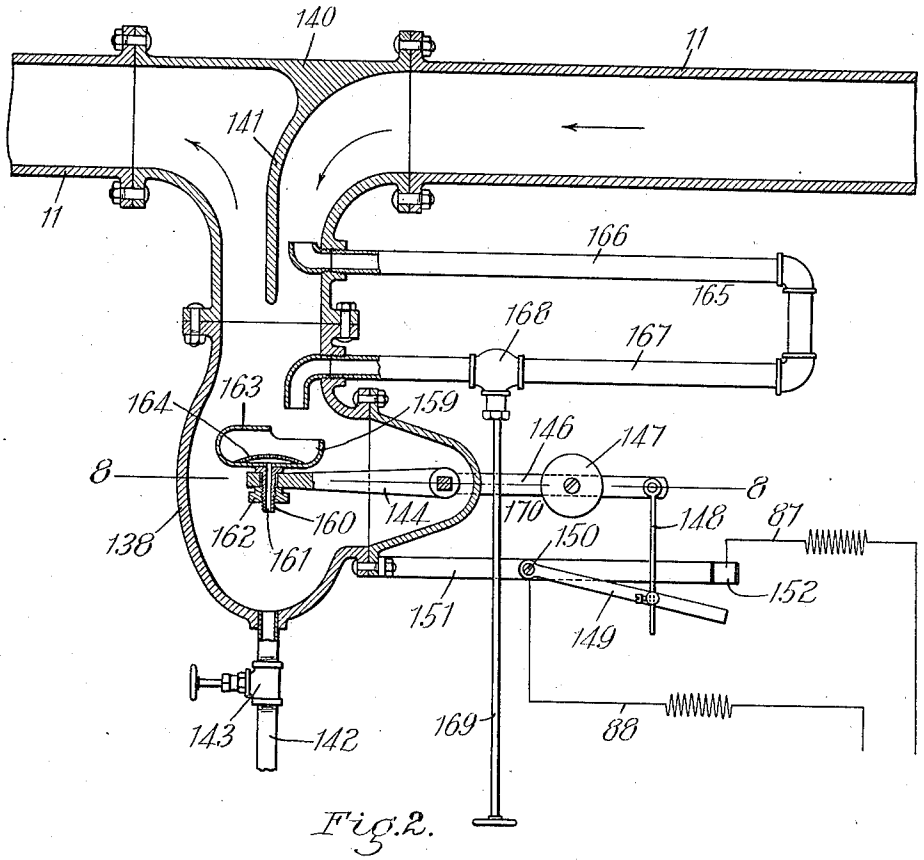

Fig. 2.

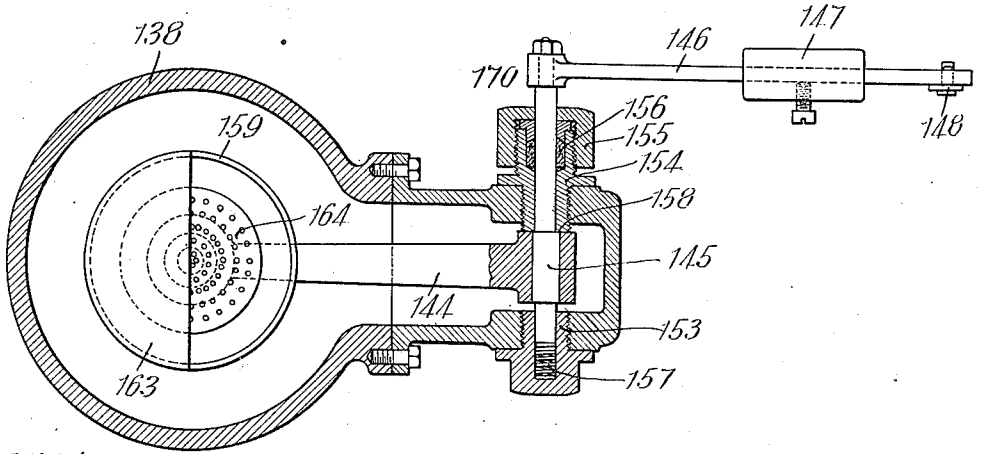

Fig. 3.

Witnesses.
Franklin E. Low.
Leonard A. Powell.

Inventor:
William G. Potter,
by his attorney,
Charles S. Gooding.

COLUMBIA PLANOGRAPH CO., WASHINGTON, D. C.

UNITED STATES PATENT OFFICE.

WILLIAM G. POTTER, OF MARBLEHEAD, MASSACHUSETTS.

MECHANISM FOR STOPPING ENGINES.

1,068,699. Specification of Letters Patent. Patented July 29, 1913.

Application filed June 8, 1912. Serial No. 702,437.

To all whom it may concern:

Be it known that I, WILLIAM G. POTTER, a citizen of the United States, residing at Marblehead, in the county of Essex and State of Massachusetts, have invented new and useful Improvements in Mechanism for Stopping Engines, of which the following is a specification.

This invention relates to mechanism for stopping an engine, the object of the invention being to provide a device of the character set forth which may be operated automatically to stop the engine, or it may be operated manually when there is a surplus of water in the steam supply pipe.

The invention consists in the combination and arrangement of parts set forth in the following specification and particularly pointed out in the claims thereof.

Referring to the drawings: Figure 1 is a front elevation of a portion of a steam engine of the type known as the "Corliss," the same being broken away to save space in the drawings, there being shown in connection with said engine my improved stop mechanism and the devices by which it may be automatically operated to stop the engine. Fig. 2 is a sectional elevation of a device whereby my improved stop mechanism may be operated when there is an excess of water in the steam supply pipe. Fig. 3 is a sectional plan on an enlarged scale taken on line 8—8 of Fig. 2.

Like numerals refer to like parts throughout the several views of the drawings.

In the drawings, referring to Fig. 1, 10 is the cylinder of an engine of the well known Corliss type, 11 is the steam admission pipe, 12 is the main valve in said pipe, 13 is the exhaust pipe and 14 and 15 are the shafts of the steam admission valves. 16 and 17 are the shafts of the exhaust valves.

The valve-operating mechanism is well known to those skilled in this art and consists, essentially, of the wrist plate 18 to which a rocking motion is imparted by the rod 19, a reciprocatory motion being imparted to said rod by suitable means such as an eccentric on the main shaft of the engine (not shown). The wrist plate 18 is connected by rods 20 and 21 to bell-crank levers 22 and 23, respectively, said bell-crank levers being mounted to rock on the valve rods 14 and 15 and having mounted thereon latch links 24 and 25, respectively. The shafts 14 and 15 have arms 26 and 27, respectively, fast thereto and these arms are connected to the latch links 24 and 25 by latch blocks not shown in the drawings, but fastened to the arms 26 and 27 by nuts 28 and 29. Rods 30 and 31 connect the arms 26 and 27 to dash-pot pistons inclosed within the dash-pots 32 and 33.

Cams not shown in the drawings, but well known to those skilled in the art are formed upon arms 34 and 35, these arms being operated by rods 36 and 37, respectively. The rods 36 and 37 are pivotally connected to a lever 38 fast to a rock-shaft 39 journaled to rock in an arm 40 upon a standard 41. Another arm 42 is fastened to the rock-shaft 39 and is connected by a connection 43 to a block 44 located in an annular groove 45 in a sleeve 46 of a governor 47, said governor being of the well known ball type and driven by a shaft 49 rotatably mounted in the standard 41 and rotated by bevel gears 49 and 50 operated by the shaft 51 to which a pulley 52 is fastened which is driven by a belt 53 from a pulley on the main shaft of the engine (not shown in the drawings).

The shafts 16 and 17 of the exhaust valves are rocked at the proper time by arms 54 and 55, respectively, fast thereto and to which a rocking motion is imparted by rods 56 and 57 connecting said arms to the wrist plate 18. Under normal conditions and when the governor 47 is in working order, the balls 58 and 59 fly outwardly when the engine increases its speed, moving the sleeve 46 upwardly on the vertical shaft 48 and carrying with it, through the block 44, the connection 43, thus tipping the arm 42 and rocking the arm 38 in the proper direction to move the rods 36 and 37 and the arms 34 and 35 connected thereto so as to bring the cams into such a position as to cause the latch links 24 and 25 to drop the latch blocks and allow the rods 30 and 31 to drop and move the arms 26 and 27 at the proper time to close the admission valves. Otherwise stated, the cut off is determined by the governor through the connections hereinbefore set forth and as the governor balls

rise the cams meet the latch links earlier and as the governor balls fall the cams are moved so that the point of cut-off will be prolonged. All of this mechanism is old and well known to those skilled in the art.

The connection 43 in its preferred form consists of a rod 60 adjustably fastened by means of a set-screw 61 to a frame 62. The rod 60 extends through an ear 63 on the frame 62, and has a link 64 pivotally connected thereto at its lower end by a pin 65. The link 64 is a toggle link, the other member 66 of the pair of toggle links being connected thereto by a pin 67 and the lower end of the toggle link 66 being connected to a rod 68 by a pin 69 upon which it is pivoted. The rod 68 is adapted to slide in an ear 70 upon the frame 62.

A lug 71 projects laterally from the lower end of the toggle 64 and engages a tooth 72 upon a rock-lever 73 pivoted at 74 to a bracket 75 fast to the frame 62, and thus locks the links 64 and 66, with the link 66 bearing against the stop pin 122. The end 76 of said lever 73 bears against a cam 77 formed upon a lever 78 pivoted at 79 to a bracket 80 fast to the frame 62.

The lever 78 has an arm 81 thereon connected by a spring 82 to a plate 83 to which the electromagnets 84 and 85 are fastened. The lever 78 is extended across the ends of the magnets 84 and 85 at 86 and constitutes an armature therefor. The electromagnets 84 and 85 are connected in circuit by means of the wires 87 and 88 to a battery 89 and in this circuit are several make and break devices to be hereinafter described.

The rod 68 has a pin 90 fast thereto which is connected by a spring to another pin 92 fast to the upper end of the frame 62. When, however, any abnormal condition of affairs occurs, such, for instance, as the flooding of the engine, said electric circuit will be closed in a manner hereinafter specifically described. The electro-magnets 84 and 85 will be energized, the armature 86 will be drawn toward said magnets, rocking the cam lever 78 and its cam 77 about the pivot 79, thus tipping the end 76 of the lock lever 73 downwardly at the end where it contacts with said cam 77 and tipping the toothed end 72 thereof upwardly. The lug 71 will be thus released and the toggle links 64 and 66 will be thrown into the position shown in dotted lines by the spring 91, which, when the lug 71 is released from the lever 73, will pull the rod 68 upwardly, and as the pivot 67 is slightly out of alinement with the pins 65 and 69, the toggle will be "broken" and the links moved into the position shown in dotted lines. When this occurs, by reference to Fig. 1 it will be seen that the rod 68 will cause the arm 42 to be moved upwardly, thus rocking the lever 38 and through the rods 36 and 37 and arms 34 and 35 the cams will be placed in position to cause the admission valves to be closed and the steam supply will thus be cut off from the cylinder of the engine and so far as this supply of power is concerned the engine will stop.

Whenever for any reason the electric circuit is closed and the stop mechanism 43 operated as hereinbefore described the rod 68 will be moved upwardly toward the rod 60 and this will shorten the connection 43, as a whole, between the opposite ends thereof—that is, between the point where it is pivoted at its upper end to the block 44 and the point where it is pivoted at its lower end to the arm 42. It will be evident that the rod 60 and the frame 62 might be integral with each other, as they are, in effect, a single piece, but are made in two parts for convenience of construction.

It sometimes happens that through negligence of the fireman or for some other reason the steam supply pipe of the engine becomes flooded with water and this water getting into the cylinder of the engine causes the heads of the cylinder to be forced off and generally results in great damage. To overcome this danger I provide a device which is operated by a surplus amount of water in the steam supply pipe of the engine which will close said circuit by means of a make-and-break device and thus operate the stop device 43 to close the admission valves to the engine.

Referring now to Figs. 1, 2 and 3, 138 is a casing, 139 is a portion of a boiler. The casing 138 is interposed in the pipe 11 between the boiler and the engine cylinder. A T fitting 140 is inserted in the pipe 11 and to this fitting the casing 138 is fastened. Within the T fitting 140 is a partition 141 which constitutes a guide and serves to divert the steam from the pipe 11 as it passes from the boiler to the cylinder through the casing 138. A drip pipe 142 leads out of the bottom of the casing 138 and may be opened or closed by means of a suitable valve 143.

An arm 144 within the casing 138 is fastened to a rock-shaft 145 journaled to rock in the casing 138 and has fastened to its outer end another arm 146 provided with a counter-weight 147 adjustably fastened thereto, and to the outer end of this arm 146 is pivoted a rod 148 which is connected to an arm 149 pivoted at 150 to a bracket 151 fast to the casing 138. An arm 149 is adapted to contact with a plate 152 which is in circuit with the wires 87 and 88 of said electric circuit. The rock-shaft 145 bears at one end thereof in a screw-threaded bearing 153 and at the other end thereof bears in a bearing 154, the same being prevented from leaking by a suitable stuffing box 155 and packing 156, while a spring 157 holds a ground joint 158, formed on the rock-shaft 145 and

on the hub of the arm 144, against the inner end of the bearing 154, this inner end also being ground to form a tight joint.

A receptacle 159 for water is mounted upon the inner end of the arm 144 within the casing 138. This water receptacle has a downwardly extending stem 160 through which a drip hole 161 extends and said stem is fastened, together with said receptacle, to the inner end of the arm 144 by a nut 162. The receptacle 159 has a cover 163 extending partly thereover to prevent the water deposited therein from being spilled during the rocking of said receptacle and is also provided with a strainer 164 in the bottom thereof which extends over the drip opening 161 and prevents foreign matter such as scale and the like from clogging the device.

A U-shaped by-pass 165 is provided, both of the legs 166 and 167 thereof projecting into the interior of the T 140 and the casing 138, respectively. Both of these inwardly projecting ends are located above the open portion of the receptacle 159 and the inner end of the part 166 is located above the part 167 within the entrance side of the T 140. A valve 168 is interposed in the leg 167 of the by-pass 165 and may be operated by means of a rod 169 to open or close said by-pass.

The operation of the device last specifically described is as follows: steam enters through the pipe 11 from the boiler 139 and passes into the casing 138, being deflected thereinto by the guide partition 141 and thence passes outwardly into the pipe 11 again and into the cylinder of the engine. Under normal conditions, any of the steam which condenses will drop into the receptacle 159, either directly or by passing through the by-pass 165 and will pass out through the drip opening 161 into the drip pipe 142 and thus out of the casing 138. If, however, an abnormal amount of water passes through the pipe 11 into the casing 138, it will flood the receptacle 159, causing the arm 144 to tip downwardly and the arm 146 to be tipped upwardly, it being noted that the arm 144, rock-shaft 145 and arm 146 constitute, as a whole, a lever 170. As the arm 146 moves upwardly the connection 148 will cause the arm 149 of the make and break device to move upwardly and to contact with the contact plate 152, closing said electric circuit and thus operating the stop mechanism 43 to actuate the valve operating mechanism to set the cam to cause the steam admission valves of the engine to be closed. It is evident that said electric circuit may be closed by hand by suitable switches 171, 172 and 173, these switches being located at suitable points in the engine room or outside thereof in other parts of the building.

The general operation of the mechanism hereinbefore described is as follows: If, through carelessness, or for any reason, the steam supply pipe 11 becomes flooded with water from the boiler, the mechanism illustrated in Figs. 2 and 3 will be operated by the flooding of the receptacle 159 to close the circuit by means of the lever 149, as hereinbefore described, and thus the stop mechanism 43 would be operated as hereinbefore described to cause the cams to be set to close the admission valves of the cylinder of the engine. After sufficient time has elapsed the water in the receptacle 159 will pass out through the opening 161 and into the pipe 142 and the counterweight 147 will cause the lever 170 to assume the position illustrated in Fig. 2.

The by-pass 165 is utilized for the purpose of testing the apparatus. Ordinarily the valve 168 will be closed and in such a case the pipe 166 and that portion of the pipe 167 up to the valve at the right thereof (Fig. 2) will be full of water. The engineer twice a day is expected to open the valve 168 by means of the rod 169 and its handle so that the water in the pipes 166 and 167 will flow into the receptacle 159, flood the same and cause the lever 170 to tip and thus close the circuit by means of the lever 149, with the result that the engine will be stopped, as hereinbefore described, if everything is in working order. If anything is not in working order, then the engineer will be warned by such a trial of the fact. The engine having been stopped the parts are set in operative position again by the engineer.

Having thus described my invention, what I claim and desire by Letters Patent to secure is:

1. In a device of the class described, the combination of a steam supply pipe, a casing connected to and beneath said steam pipe, a guide adapted to deflect fluid into said casing, an arm pivoted in said casing, a receptacle rigidly attached to the free end of said arm with the mouth of said receptacle directly in the path of the fluid passing through said supply pipe, and an electric circuit make and break device adapted to be operated by the movements of said receptacle.

2. In a device of the class described, the combination of a steam supply pipe, a casing connected to and beneath said steam pipe, a guide adapted to deflect fluid into said casing, an arm pivoted in said casing, a receptacle rigidly secured to the free end of said arm transversely of the passage through said supply pipe and directly in the path of the fluid passing therethrough, and means exteriorly of said casing adapted to be actuated by the movements of said receptacle within said casing to shut off the supply of steam passing through said supply pipe.

3. A device of the class described, embody-

ing in its construction, a steam supply pipe, a casing connected to and beneath said steam pipe, a guide adapted to deflect the entire amount of fluid passing through said pipe into said casing, a receptacle pivotally arranged within said casing with the mouth thereof directly in the path of the fluid passing through said pipe, a stem extending downwardly from said receptacle provided with a drip hole adapted to permit the gradual escape of the fluid caught in said receptacle, and instrumentalities adapted to be operated by the pivotal movements of said receptacle.

4. A device of the class described, embodying in its construction, a steam supply pipe, a casing connected to and beneath said steam pipe, a guide adapted to deflect the entire amount of fluid passing through said pipe into said casing, a receptacle pivotally arranged within said casing with the mouth thereof directly in the path of the fluid passing through said pipe, a stem extending downwardly from said receptacle provided with a drip hole, a hood extending over the portion of said receptacle farthest removed from the pivot thereof adapted to prevent an overflow of the fluid in said receptacle during the pivotal movements thereof, and instrumentalities adapted to be operated by the pivotal movements of said receptacle.

5. A device of the class described, embodying in its construction, a steam supply pipe, a casing connected to and beneath said steam pipe, a guide adapted to deflect fluid into said casing, a rock shaft arranged in said casing with one end protruding therefrom, an arm secured to said shaft within said casing, means to prevent a leakage of fluid from said casing around the protruding end of said shaft, said means including a ground surface on said lever, a second ground surface on said casing, and means to yieldingly retain said ground surfaces in contact one with the other; a receptacle rigidly secured to the free end of said arm with the mouth of said receptacle directly in the path of the fluid passing through said supply pipe, and a second arm secured to the protruding end of said shaft adapted to be rocked by said shaft.

6. A steam engine embodying in its construction a cylinder and piston, means connected to said valve operating mechanism adapted to be operated by the closing of an electric circuit to cause said valve operating mechanism to close said valve, a steam supply pipe for said engine, a casing connected to and beneath said steam pipe, a guide adapted to deflect fluid through said casing, a movable receptacle for fluid in said casing, a make and break device in said circuit, means connecting said make and break device to said receptacle, whereby, when said receptacle is moved by fluid deposited therein, said make and break device will be operated to close said circuit, a by-pass leading out of said casing and returning thereinto, the inlet opening of said by-pass being located above said receptacle, a valve in said by-pass adapted to be operated to open and close the same, the outlet opening of said by-pass being located above and in alinement with said receptacle and a valve in said by-pass adapted to be operated to open and close the same.

In testimony whereof I have hereunto set my hand in presence of two subscribing witnesses.

WILLIAM G. POTTER.

Witnesses:
CHARLES S. GOODING,
SYDNEY E. TAFT.

Copies of this patent may be obtained for five cents each, by addressing the "Commissioner of Patents, Washington, D. C."