H. B. FEBIGER.

FIREARM.

APPLICATION FILED JAN. 22, 1913.

1,068,752.

Patented July 29, 1913.

2 SHEETS—SHEET 1.

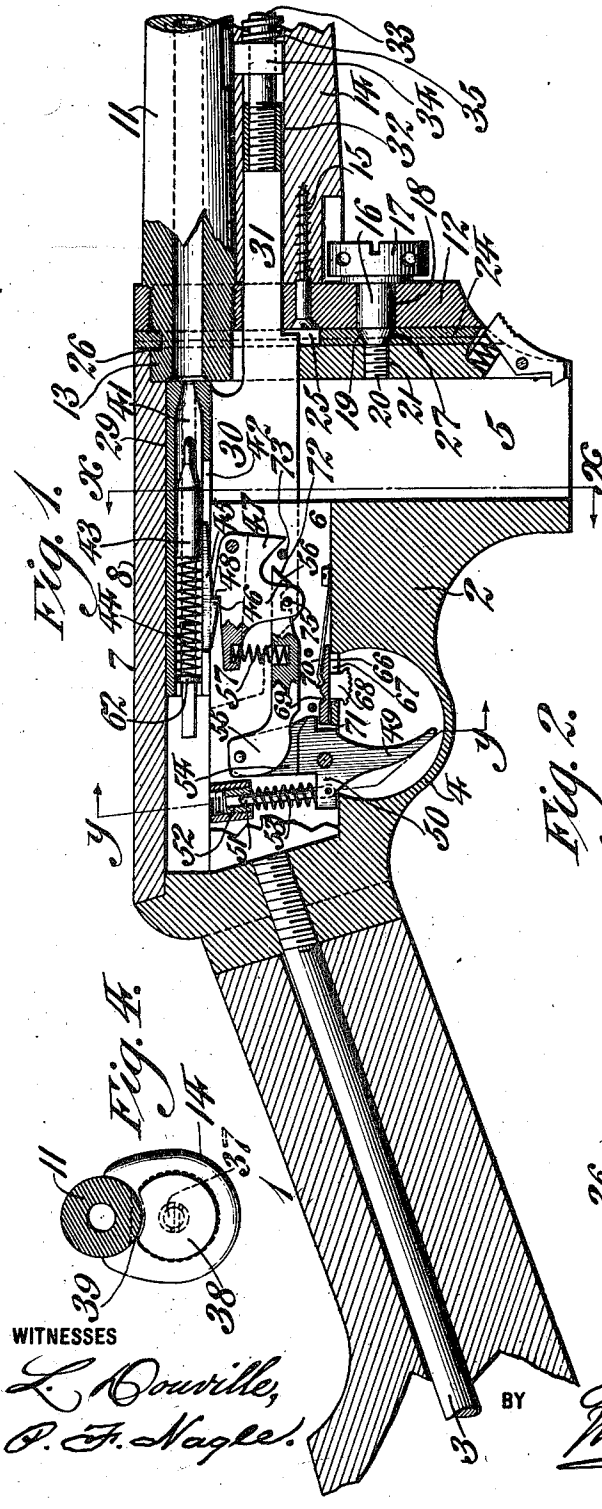

Fig. 1.

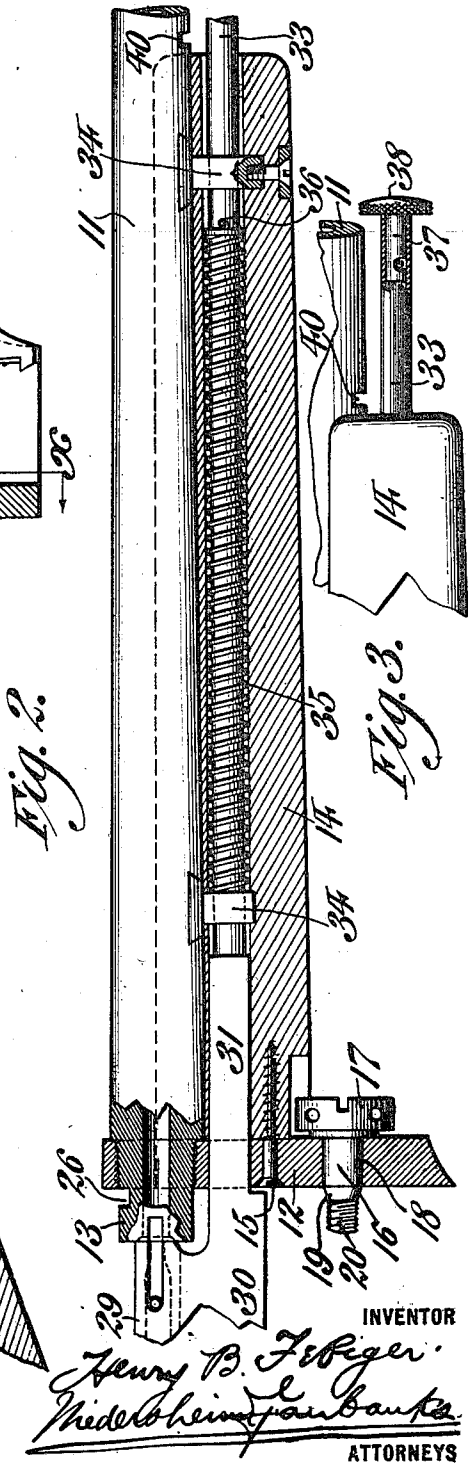

Fig. 2.

Fig. 3.

Fig. 4.

WITNESSES

L. Courville,

P. F. Nagle.

INVENTOR

Henry B. Febiger.

BY Niedelheim & Banks.

ATTORNEYS

H. B. FEBIGER.

FIREARM.

APPLICATION FILED JAN. 22, 1913.

1,068,752.

Patented July 29, 1913.

2 SHEETS—SHEET 2.

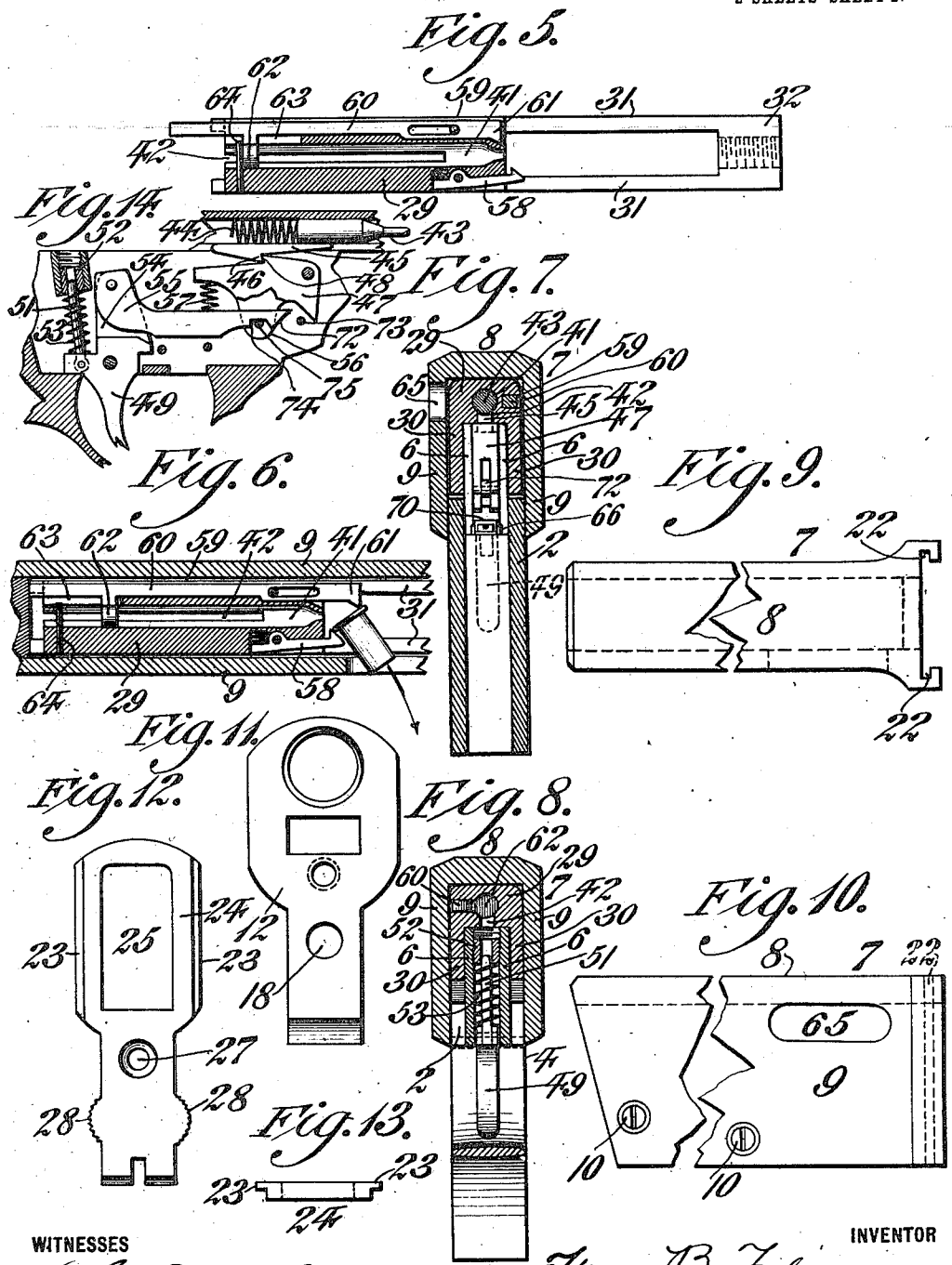

WITNESSES

L. Rouville,

P. F. Nagle.

INVENTOR

Henry B. Febiger,

BY Wedersheim & Fairbanks

ATTORNEYS

UNITED STATES PATENT OFFICE.

HENRY B. FEBIGER, OF NEW ORLEANS, LOUISIANA, ASSIGNOR OF THREE-EIGHTHS TO JOHN C. FEBIGER, JR., AND ONE-EIGHTH TO COLLINS C. DIBOLL, BOTH OF NEW ORLEANS, LOUISIANA.

FIREARM.

1,068,752. Specification of Letters Patent. Patented July 29, 1913.

Application filed January 22, 1913. Serial No. 743,441.

To all whom it may concern:

Be it known that I, HENRY B. FEBIGER, a citizen of the United States, residing at New Orleans, parish of Orleans, State of Louisiana, have invented a new and useful Firearm, of which the following is a specification.

My invention consists of an automatic magazine fire-arm especially designed for center-fire ammunition.

It further consists of improved means for detachably connecting the barrel and stock-portions of such a fire-arm.

It further consists of improved means for supporting and guiding the breech-block of such fire-arm.

It further consists of a receiver for such fire-arm which will be completely closed to prevent leakage of gases and fumes from the exploding cartridges.

It further consists of improved firing mechanism for such a fire-arm.

It further consists of improved means for holding the breech-block in its rearward position.

It further consists of an improved safety-catch.

It further consists of improved ejector mechanism.

It further consists of other novel features of construction, all as will be hereinafter fully set forth.

The annexed drawings and the following description set forth in detail one mechanical form embodying the invention, such detail construction being but one of various mechanical forms in which the principle of the invention may be used.

In said annexed drawings:—Figure 1 represents a longitudinal section of the receiver, a portion of the stock and a portion of the barrel of a fire-arm embodying my invention. Fig. 2 represents a side view of a portion of the barrel and a section of the fore-end. Fig. 3 represents a view of the outer end of the fore-end and of a portion of the barrel. Fig. 4 represents a transverse section of the barrel and an end-view of the fore-end. Fig. 5 represents a top view, partly in section, of the breech-block. Fig. 6 represents a sectional detail view of the receiver and the breech-block. Fig. 7 represents a section on the line *x*—*x* in Fig. 1. Fig. 8 represents a section on the line *y*—*y* in Fig. 1. Fig. 9 represents a top-plan view of the cap, showing a part broken away and removed. Fig. 10 represents a side view of the cap with parts broken away and removed. Fig. 11 represents a face-view of the frame to which the barrel and fore-end are secured. Fig. 12 represents a view of the locking-plate. Fig. 13 represents an end view of such plate. Fig. 14 represents a detail view of the firing mechanism.

Similar numerals of reference indicate corresponding parts in the figures.

Referring to the drawings, the reference numeral 1 indicates a portion of the stock of the fire-arm. A stock-frame, 2, is secured to the forward end of the stock by a screw-threaded rod, 3, and comprises a trigger-guard, 4, a magazine-guide, 5, and a pair of parallel longitudinal guide-flanges, 6, extending from the magazine-guide to the closed rear end of the frame. A cap, 7, having a top, 8, and side-flanges, 9, straddles the frame and closes the sides of the same, being secured by screws 10. The barrel, 11, has its rear end screwed into and through a barrel-frame, 12, to have the end, 13, in which the chamber is formed project rearward into the frame and cap. The fore-end, 14, is secured beneath the barrel and to the barrel-frame by a screw, 15. An assembling-screw, 16, having a head, 17, turns freely in a hole, 18, in the barrel-frame, and has a tapering portion, 19, and a threaded end, 20, screwed into a threaded opening, 21, in the front-face of the stock-frame. The forward ends of the sides of the cap have undercut ways, 22, in which the rabbeted side-edges, 23, of a locking-plate, 24, slide, and said plate has an opening, 25, through which the chamber-end of the barrel and the forward end of the action-slide extend, and the upper edge of which engages a notch, 26, in the upper side of the chamber-end of the barrel. The locking-plate has a tapering opening, 27, into which the tapering portion of the assembling screw passes. The side-edges of the locking-plate, near the lower end of the same, are formed with toothed or roughened bulges, 28, for convenience of sliding the plate.

In assembling the gun, the barrel-frame carrying the barrel and fore-end is placed against the locking-plate, which is located within the undercut ways of the cap for the stock-frame, whereupon said plate is drawn

down to engage the notch in the chamber-end and the assembling-screw inserted and screwed home. The tapering portion of said screw and the tapering opening in the locking-plate will cause the latter to be drawn down to tightly engage the notch, and will tightly draw and hold the parts together.

An action-slide has a body-portion, 29, slidable upon the upper edges of the guide-flanges of the frame, and flanges, 30, straddling said frame-flanges. Said body-portion forms the breech-block, and said slide-flanges extend forward from the breech-block to form action-bars, 31, connected at their forward ends by a cross-piece, 32, having a screw-threaded socket into which the rear end of an action-rod, 33, is secured. The action-bar and action-rod are longitudinally slidable within the fore-end, and said rod is guided in guide-blocks, 34, secured to the under side of the barrel. A coiled spring, 35, is coiled around the rod and bears against the rear guide-block and a stop-pin, 36, in the rod, serving to pull the action-rod and slide forward. The forward end of the rod extends beyond the forward end of the fore-end and is hollow, and a pin, 37, is confined within such hollow end and may be rotated a one-quarter revolution in the same. A knurled button, 38, is formed upon the end of said pin and has a portion of its periphery cut away, at 39, to admit of it sliding beneath the barrel while, when forced rearward and partly turned, its uncut periphery can engage a notch, 40, in the under side of the barrel and hold the action-slide, bars and rod in their rearmost position.

The breech-block has an axial bore, 41, having a contracted forward end and a longitudinal slot, 42, in its under-side. A firing-pin, 43, is slidable within said bore and has a spring, 44, forcing it forward. A web, 45, extends laterally from said pin and is slidable in said slot, and said web is formed with a forwardly-facing sear-shoulder, 46.

A sear, 47, is pivoted at its forward end between the guide-flanges, of the stock-frame, and has a sear-shoulder, 48, upon its upper edge, adapted to engage the shoulder of the firing-pin.

A trigger, 49, is pivoted between the guide-flanges to project within the trigger-guard, and has a rearwardly extending arm, 50, to which a post, 51, is pivotally connected. The upper end of the said post is guided in an adjustable socket, 52, between the guide-flanges, and a spring, 53, is coiled around said post and bears against said socket and the arm of the trigger to throw the latter forward. The trigger has an upwardly projecting arm, 54, to the upper end of which an L-shaped trigger-bar, 55, is pivotally connected and the forward end of which bar is movably connected to a downwardly extending arm, 56 of the sear. A spring, 57, is interposed between the rear end of the sear and the trigger-bar to force the sear upward.

A spring-actuated extractor, 58, is secured in a groove in the forward end of the breech-block to project into the chamber and extract the exploded shell in the usual manner. On the side opposite to that of the extractor, the breech-block is formed with a groove, 59, within which slides an ejector formed by a bar, 60, having a nose, 61, at its forward end and having a laterally projecting plunger, 62, which slides in the bore of the breech-block, projecting through a slot, 63, in the same, and having the rear end of the firing-pin spring bearing against it. A pin, 64, serves as a stop for the rearward movement of said plunger. The right-hand side of the cap is formed with an ejection opening, 65, through which the exploded shells are ejected.

A safety catch is provided within the trigger guard and consists of a bar, 66, sliding over a slot, 67, in the bottom of the receiver and having a finger-piece, 68, sliding in the slot. The upper face of the bar is formed with two notches, 69, into which the end of a spring, 70, may engage. The forward edge of the trigger is formed with a nose or shoulder, 71, beneath which the rear end of the bar may engage when moved rearward, and this will prevent the trigger from being pulled. The forward end of the trigger-bar is oblique, as at 72, and may, when the trigger is pulled and the bar moved forward, ride upward upon a pin, 73, between the guide-flanges, and the trigger-bar has a notch, 74, engaging a pin, 75, in the lower arm of the sear.

When a charged magazine has been inserted into the magazine guide and it is desired to fire the gun, the action rod is pushed rearward and again allowed to come forward. As the breech-block moves rearward, the shoulder of the firing pin passes over the shoulder of the sear, and when the block again moves forward, the sear-shoulders engage and the firing pin is held and compresses its spring while the breech-block moves forward. The forwardly moving breech-block carries the uppermost cartridge from the magazine into the chamber of the barrel, and the cartridge may now be fired by pulling the trigger which pushes the trigger-bar forward and rocks the sear to disengage its shoulder from the shoulder of the firing pin, allowing the spring of the latter to drive it forward to strike the fulminating-cap of the cartridge. The recoil from the explosion in the cartridge will throw the breech-block rearward, when the extractor will withdraw the empty shell and the rear end of the ejector will strike

the rear end of the receiver to cause the ejector to tilt the shell and eject it, as appears in Fig. 6 of the drawings. As the breech-block is again moved forward by the action-spring, the succeeding cartridge is fed into the chamber and the firing-pin spring compressed, when the firing action may be repeated.

If it is not desired to charge the chamber, the breech-block may be pushed back by the action-rod and held in such position by turning the button upon the end of said rod to bring its periphery into the notch in the under side of the barrel.

When firing a gun, the natural tendency of the gunner is to retain his pull upon the trigger for some space of time. If the pivot-connection between the trigger-bar and the sear were in continual engagement, the sear would be retained pulled down, and the recoiled breech-block and its sear-shoulder would pass rearward and be drawn forward without getting into engagement with the shoulder of the sear and, consequently, without setting or cocking the firing-pin as the breech-block moves forward. As, however, the pulled trigger pushes the trigger-bar forward and rocks the sear, its inclined forward end rides upward on the stationary pin 73, until the notch in the bar is disengaged from the pin in the lower sear-arm, when the spring between the sear and trigger-bar rocks the sear upward to admit of the sear-shoulders engaging as the breech-bolt moves forward, thus retaining the firing pin and compressing its spring. When the trigger is now released, the trigger-bar is drawn rearward and its notch will again engage the pin of the sear-arm.

As the receiver consists of only two parts, the frame and the cap which completely incloses the sides of the latter, a very strong structure is obtained and tight joints can be obtained, preventing leakage of gases and powder-particles.

The gun may be easily assembled and taken apart, and there are no loose parts which can be lost when it is taken apart. All moving parts of the firing, ejecting and extracting mechanism are inclosed within the frame and cap, and are completely protected against dust and moisture in the atmosphere.

Other modes of applying the principle of my invention may be employed for the mode herein explained. Change may therefore be made as regards the mechanism thus disclosed, provided the principles of construction set forth, respectively, in the following claims are employed.

Having thus described my invention, what I claim as new and desire to secure by Letters Patent, is:—

1. In a fire-arm, a frame having an open top and formed with longitudinal guide-flanges, a cap secured to straddle said frame to inclose the top and sides of the same, a breech-block straddling and slidable upon said guide-flanges, and trigger and sear mechanism arranged between said flanges.

2. In a fire-arm, a frame having an open top and formed with longitudinal guide-flanges, a cap secured to straddle said frame to inclose its top and sides, a breech-block straddling and slidable upon said guide-flanges, a firing-pin slidable in said block, a spring adapted to force said pin forward, a sear movably supported between the guide-flanges and adapted to engage said firing-pin, and a trigger movably supported between said guide-flanges and movably connected to actuate said sear.

3. In a fire-arm, a frame formed with longitudinal guide-flanges, a breech-block straddling and slidable upon said flanges and formed with a bore having a slot in its under side, a firing-pin slidable in said bore and provided with a web slidable in said slot and having a sear-shoulder, a spring bearing against the rear end of said firing-pin, a sear pivoted between said guide-flanges and having a shoulder adapted to engage the shoulder of the firing-pin, a trigger pivoted between said guide-flanges, a trigger-spring, and a trigger-bar pivoted to said trigger and movably connected to said sear.

4. In a fire-arm, a sear having a shoulder at its upper edge, and formed with a downwardly extending arm having a pin, a trigger having an upwardly-projecting arm, a trigger-spring, an L-shaped trigger bar pivoted to the end of said arm and formed with a notch in its lower edge adapted to engage the pin of the sear and with an oblique forward end, a rigid pin arranged to have said oblique end ride upon it, and a spring interposed between the rear of said sear and said trigger-bar.

5. In an automatic fire-arm, a reciprocable breech-block, a firing-pin in such block and formed with a sear-shoulder, a spring for actuating said firing-pin, a sear having a shoulder upon its upper edge adapted to engage the shoulder of the firing-pin and formed with a downwardly extending arm having a pin, a trigger having an upwardly-projecting arm, a trigger-spring, an L-shaped trigger bar pivoted to the end of said arm and formed with a notch in its lower edge adapted to engage the pin of the sear and with an oblique forward end, a rigid pin arranged to have said oblique end ride upon it, and a spring interposed between the rear of said sear and said trigger-bar.

6. In a fire-arm, a stock-frame having a screw-threaded opening in its forward face, a cap fitted over said frame and having the forward ends of its sides formed with under-

cut ways, a barrel-frame having an opening corresponding to said threaded opening in the stock-frame, a barrel secured through said barrel-frame and having at its rear end a chamber-extension formed with a notch in its upper side, a locking-plate having rabbeted side-edges slidable in the ways of the cap and formed with an opening the upper edge of which engages the notch of the barrel-extension and with a tapering opening registering with the openings in the frames, and an assembling screw passing through the openings and having a tapering portion engaging the tapering opening in the locking-plate and a threaded portion engaging the threaded opening in the stock-frame.

7. In a fire-arm, a fore-end, a barrel having a notch in its under side at the forward end of the fore-end, an action-slide, a spring connected to draw the latter forward, and a rod slidable in said fore-end and connected to said slide and having a button pivoted at the outer end of the rod and formed with a cut-away portion in its periphery admitting such button to slide beneath the barrel and to engage said notch in the barrel with its periphery when rotated.

8. In a fire-arm, a fore-end, a barrel having a notch in its under side at the forward end of the fore-end, an action-slide longitudinally movable in said fore-end, slide-bearings upon the barrel and within said fore-end, an action-rod movable in said bearings and secured at its rear end to the action-slide, a spring coiled upon said rod and bearing against the rear slide-bearing and against a stop upon the rod, and a button having a pin pivoted in the forward end of the action-rod and formed with a cut-away portion in its periphery to admit of its moving along the under side of the barrel.

9. In a fire-arm, a receiver having an ejection-opening in one side, a breech-block slidable in said receiver and having a groove in one side and a bore communicating at its rear end with said groove through a slot, a firing-pin slidable in said bore, a spring in said bore and having one end bearing against said pin, an extractor at the front end of said breech-block, and an ejector comprising a bar slidable in the groove of said breech-block to have its rear end normally project beyond said breech-block and provided with a plunger slidable in the bore of the latter and having the rear end of the spring bearing against it.

HENRY B. FEBIGER.

Witnesses:
JNO. C. FEBIGER, Jr.,
K. E. MELLEN.