C. A. KELLOGG.

WEB PRINTING PRESS.

APPLICATION FILED DEC. 15, 1919.

1,411,789.

Patented Apr. 4, 1922.

2 SHEETS—SHEET 1.

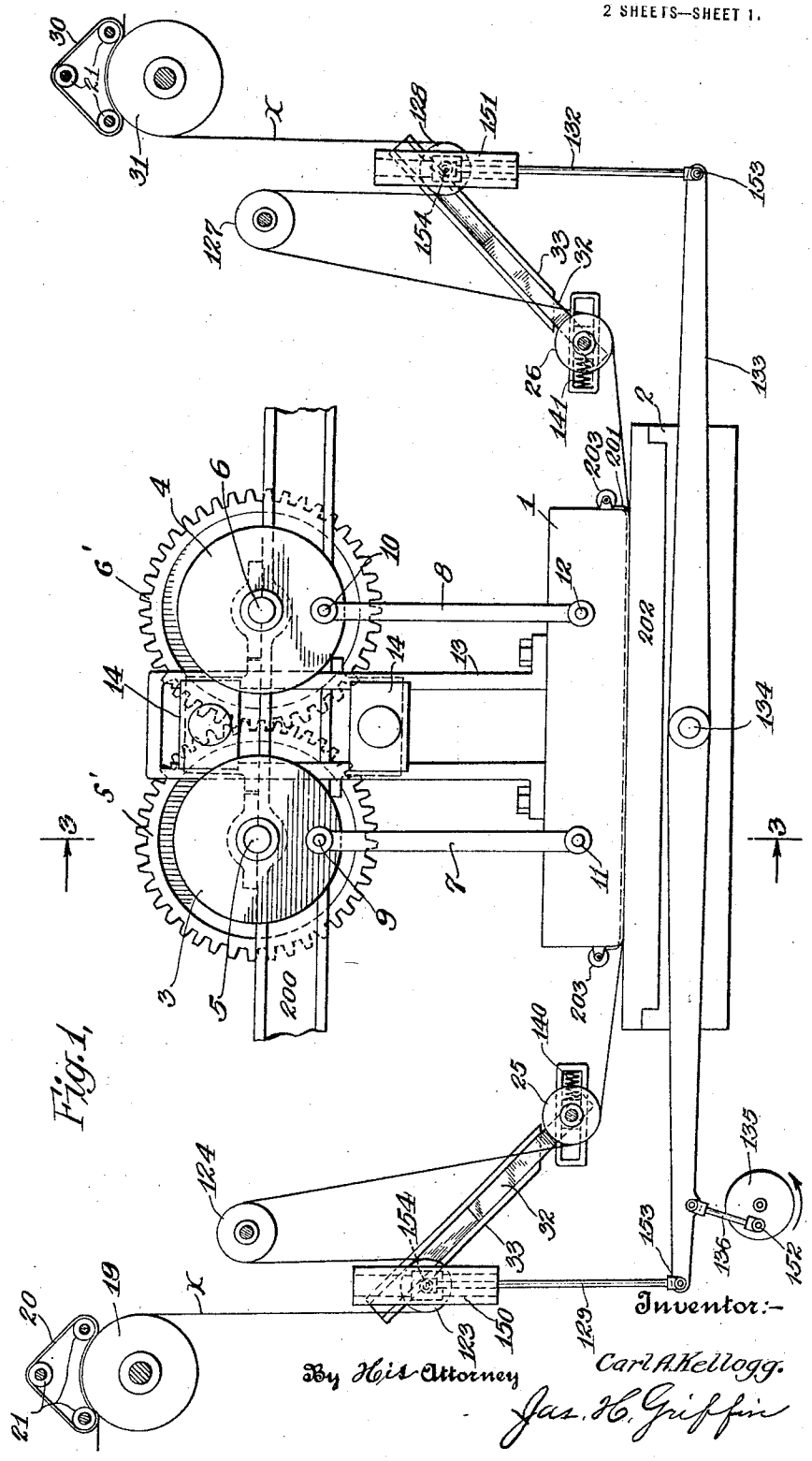

Fig. 1.

Inventor:-

Carl A. Kellogg.

By His Attorney

Jas. H. Griffin

C. A. KELLOGG.

WEB PRINTING PRESS.

APPLICATION FILED DEC. 15, 1919.

1,411,789.

Patented Apr. 4, 1922.

2 SHEETS—SHEET 2.

Fig. 3.

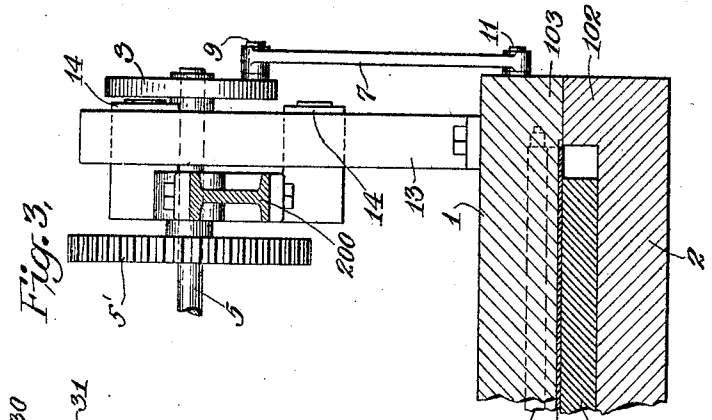

Fig. 2.

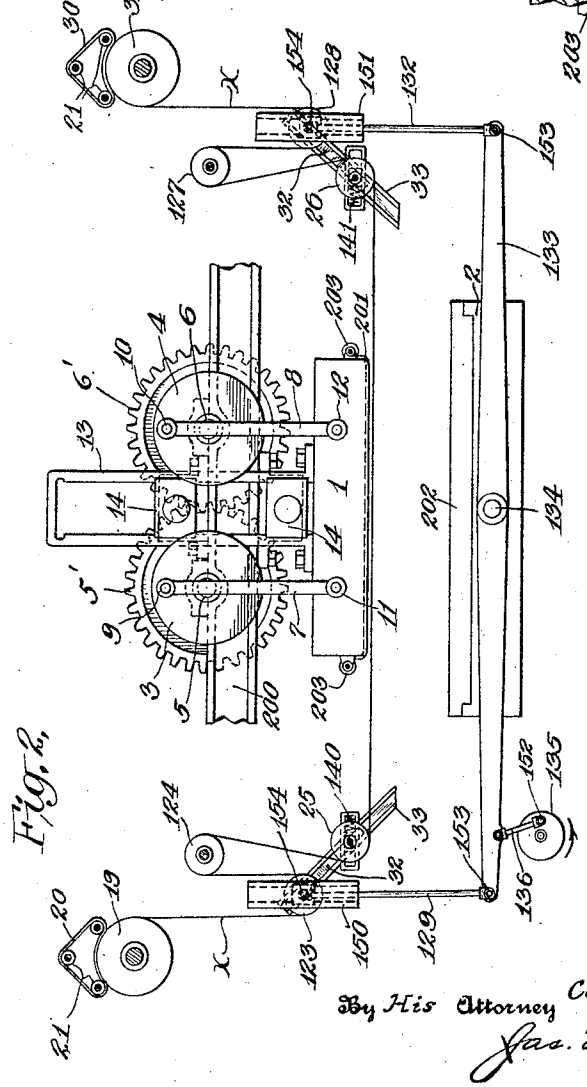

Inventor

Carl A. Kellogg

By His Attorney

Jas. H. Griffin

UNITED STATES PATENT OFFICE.

CARL A. KELLOGG, OF BROOKYLN, NEW YORK.

WEB-PRINTING PRESS.

1,411,789. Specification of Letters Patent. Patented Apr. 4, 1922.

Application filed December 15, 1919. Serial No. 344,954.

To all whom it may concern:

Be it known that I, CARL A. KELLOGG, a citizen of the United States, residing in the city of New York, borough of Brooklyn, county of Kings, and State of New York, have invented certain new and useful Improvements in Web-Printing Presses, of which the following is a specification.

This invention pertains to improvements in printing presses of the general type specified, though not necessarily restricted thereto, and among the features of novelty, though not the exclusive ones, may be mentioned mechanism, positioned intermediate the infeed and outfeed, adapted to be moved out of alinement in order to compensate for the unevenness of the web; means for causing the platen to contact or engage with the web before said web is pressed to the form, whereby the air is forced out from between the platen and the web and thus enable the web to be drawn tightly against the working face of the platen and to lay smoothly thereon, and improved means for operating the looping mechanism.

The improvements of this invention contemplate the moving of the members of the printing couple either before, during or after impression.

The holding and smoothing means of this invention may be readily adapted for use in conjunction with any style of flat impression member or with a platen having a curved impression surface. Moreover, the platen, if desired, may be stationary and the bed or form made movable.

Features of the invention other than those specified will be apparent from the hereinafter detailed description taken in conjunction with the accompanying drawings.

In the accompanying drawings I have illustrated one practical embodiment of the invention, but the construction therein shown is to be understood as illustrative only, and not as defining the limits of the invention.

In the drawings,

Figure 1 shows the position of the parts at the time of taking the impression;

Figure 2 shows the position of the parts as the platen is at its highest point; and

Figure 3 is an end view taken on the line 3—3 of Figure 1, looking in the direction of the arrow.

Referring to the drawings, 2 designates the form bed of the printing machine mounted in any suitable manner in the frame of the machine and adapted to support a flat form 202. Extending along either side of the form bed and above the same are portions 200 of the frame of the machine each of which supports, in juxtaposition with the form bed, fixed bearings 14—14 mounted one above and one below each part 200 of the frame. These bearings are in the form of guide blocks, the lateral edges of which are fitted for sliding engagement with a guide yoke 13 mounted for vertical movement relative thereto and the lower ends of which yoke are bolted or otherwise secured to the platen 1 of the machine. By mounting platen 1 as described, it is adapted for vertical reciprocating movement toward and away from the form bed 2 which, in the preferred embodiment of the invention is stationary. The means for so reciprocating the platen 1 will now be described.

Extending transversely of the side sections 200 of the frame and mounted for rotation thereof, are a pair of shafts 5 and 6 geared together by gears 5′ and 6′. Either one of these gears may be driven by external power or either shaft may be driven by such power to cause both shafts to operate in unison through the gearing 5′, 6′ when the machine is operating. Mounted on each end of each shaft 5 and 6 are crank disks 3 and 4 carrying off-center wrist pins 9 and 10, with which are associated pitmen 7 and 8, the opposite ends of which are pivoted at 10 and 11 to the platen 1. As a result of this construction the rotation of the shafts 5 and 6 operate through the pitmen to raise and lower the platen in directions toward and away from the form bed, through which movements the platen is guided by the guide yoke 13 as described.

The face of the platen is preferably made perfectly flat and may be covered by the usual packing secured in place by reel rods 203, as shown in Figure 1.

The web, shown at X, is adapted to be fed between the members of the printing couple between impressions with periods of rest or dwell during impression, and this is accomplished in the following manner. As shown in Figures 1 and 2 the web is fed in from the left hand side of the machine over a feed roll 19 with which co-operates a feed tape 20

operating about rolls 21. From the feed roll 19, the web passes about a looping roll 123 and thence over the directional roll 124 to a lifting roll 25. From the lifting roll 25, the web passes directly between the members of the printing couple, at the other side of which is positioned a complementary lifting roll 26 from which the web passes over a second directional roll 127, thence over a second looping roll 128 and finally over an out-feed rool 31 with which is associated an out-feed belt 30 operating around rollers 21. The feed rollers 19 and 31 operate at a constant speed to feed the web at a uniform rate of travel into and out of the machine, but the periods of rest or dwell of the web between the members of the printing couple during impression are compensated for or provided for by the looping rolls 123 and 128 which operate in unison with one another, so that the former takes up the web as it is fed into the machine and the latter pays it out while the members are on impression.

In order to accomplish proper synchronism between the operations of these looping rolls, their shafts 154 are mounted for vertical movement in fixed guide-ways 150 and 151 and are adapted for movement in these guide-ways through the instrumentality of rods 129 and 132 which are respectively connected to the opposite ends of rocker arms 133, one of which is pivoted at either side of the machine as at 134.

Movement is imparted to the rocker arms 133 by means of crank disks 135, one of which is positioned adjacent each rocker arm. Each crank disk 135 is provided off-center with a wrist pin 152 associated with which is one end of a pitman 136, the other end of which is pivoted to the corresponding rocker arm, as clearly shown in Figures 1 and 2. Crank disks 135 are driven at a constant speed during the operation of the machine and serve to actuate the rocker arms 133 to move the looping rolls alternately in opposite directions for the purposes specified. A marked advantage in the employment of pitmen for operating each rocker arm is inherent in the fact that between the upper and lower dead centers of the crank disk, the speed of operation will gradually accelerate until the highest speed is attained and will then gradually diminish until the rocker arm comes to a full stop. In other words, the rocker arms are started and stopped gradually and marked vibration due to the momentum and inertia of these arms does not result although all of the advantages of high speed intermediate travel are obtained.

This method of operating the rocker arms is much superior to constructions employing cams and I, therefore, prefer to use the construction shown although, manifestly, a cam or other form of mechanism can be employed without rendering the remainder of the machine inoperative.

The web lifting rolls 25 and 26 are mounted in frames supported on the lower ends of the members 32 which in turn are mounted for sliding movement in guides 33. Members 32 are slid longitudinally of the guides 33 by any suitable mechanism not shown and in synchronism with the operations of the platen as hereinafter more fully described which serves to raise and lower the web as desired in the carrying out of this invention. It will be noted, moreover, that the rolls 25 and 26 are slidably mounted in the frames which support them and accordingly may be slid toward and away from one another for a slight extent against the tension of springs 140 and 141 which normally impel them apart. This method of mounting the lifting rolls 25 and 26 has many advantages, one of which is that they are allowed to move slightly out of their normal parallel relation to compensate for slight unevenness of the web, whereby the web is allowed at all times when in engagement with the platen to lie flattened thereon without imposing undue stress on either edge of the web.

The operation of the machine will now be described. As heretofore stated, the web is fed at a constant speed over the in-feed and out-feed rollers 19 and 31 and during the period of operation of the machine shown in Figure 2, the crank disks 135 are operating at their maximum speed to allow of the rapid advance of the web between the members of the printing couple, which, as shown in said figure, are at their greatest distances apart with the platen free from engagement with the web. Continuing the operation of the machine from its position shown in Figure 2, the crank disks 3 and 4 continue to rotate and force down the platen 1 and the mechanism associated with the lifting rolls 25 and 26 also operates said rolls to lower them and by so doing lower the web to the position in which the rolls 25 and 26 are shown in Figure 1, whereupon these rolls come to rest with the web free from engagement with the form 202. The platen descends to engage with the web which is stretched taut between the rolls 25 and 26 and at this period is stationary between said rolls due to the rapid movement of the looping roll 123 in a downward direction and the looping roll 128 in an upward direction. When the platen engages with the web, it forces the web down upon the form but in doing so the web cannot give as there is no slack therein. Accordingly, in order to force the web down into engagement with the form, the platen is required to draw the rolls 25 and 26 toward one another against the tension of the springs 140 and 141. In placing these

springs under tension and drawing the rolls together to warp the web downwardly as shown in Figure 1 considerable tension is placed on the web with the result that it is caused to lie perfectly flat upon the face of the platen and all air is forced from between the web and the platen so that when the members go on impression, the web is perfectly flat and a perfect impression results.

The machine continues to operate and immediately the impression is made the pitmen 7 and 8 pass over the bottom dead center and lift the platen back to the position of Figure 2. The initial movement of the platen allows the web to assume a straight line position between the rollers 25 and 26 and strips it from the form, whereupon continued movement of the platen lifts the platen free from the web, leaving the web free to be shifted while out of engagement with the platen. While the platen is being raised to the position of Figure 2 and practically as soon as it leaves engagement with the web, the web starts forward on its advance and simultaneously therewith the mechanism associated with the lifting rolls 25 and 26 lifts the web to the position of Figure 2 out of the path of suitable form rollers adapted to be passed between the members of the printing couple and under the web to reink the form.

In carrying out the present invention it is within the scope of this invention that the members of the printing couple may move or be restricted either during impression or before or after impression so that the platen may remain stationary and the bed be movable toward and away from the platen.

Moreover, with slight changes the holding and smoothing means would be adapted to operate with any style of flat impression member as well as with curved impression members. Accordingly, the present invention is to be understood as not limited to this specific structure shown in the drawings but is as broadly novel as is commensurate with the appended claims.

Having thus fully described the invention, what I claim as new and desire to secure by Letters Patent is:

1. In a printing machine, a printing couple embodying a form and a platen, means for guiding a web to be printed upon between the form and platen, said means embodying a pair of spring retracted rolls, one of which is positioned near either end of one member of the printing couple and which rolls are mounted to be parallel at all times with the face of the form, but are adapted through their resilient mounting to partake of non-parallel relation with respect to one another for the purpose of compensating for unevenness in the web.

2. In a printing machine, a printing couple, means for effecting movement of the members of the printing couple off and on impression, means for guiding a web between the members of the couple, said means embodying a pair of spring retracted rolls one of which is positioned near either end of the platen, and which rolls, while normally maintained in parallel relation, are adapted, through their resilient mounting, to partake of non-parallel relation for the purpose of compensating for unevenness in the web, and means movable independently of either of the members of the printing couple for lifting said rolls whereby they are adapted to hold the web free from engagement with the form while the members are off impression.

3. In a web printing machine, a printing couple including a bed adapted to support a flat form, and an impression member, means operable to move one member of the couple off and on impression, means for feeding the web into and out of the machine continuously, means operable to cause the web to dwell during impression, and means operable to compensate for unevenness of the web.

4. In a printing machine, a printing couple, means operable to move one member of the couple, off and on impression, means operable to guide a web between the members of the couple, and means movable substantially parallel with the run of the web between the members of the couple and operable to compensate for unevenness in said web.

5. In a web printing machine, a printing couple, means operable to guide a web between the members of the printing couple, yielding means in contact with the web, said means being capable of movement and when so moved being operable to position the web flat against one member of said couple.

6. A web printing machine embodying a printing couple, means operable to move one member of the couple off and on impression, means operable to guide a web between the members of said couple, and yieldable means operable to compensate for unevenness in said web and adapted to maintain the web substantially parallel with one member of said couple.

In testimony whereof, I have signed my name to this specification.

CARL A. KELLOGG.