Aug. 18, 1936. E. WILDHABER 2,051,356

METHOD OF RECEIVING PICTURES

Filed May 6, 1927 3 Sheets-Sheet 1

FIG. 1

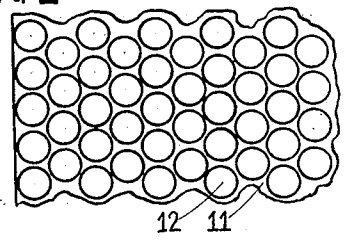

FIG. 2

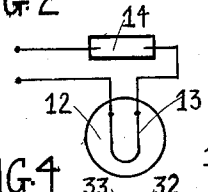

FIG. 3

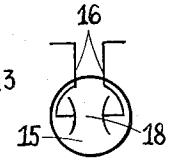

FIG. 8

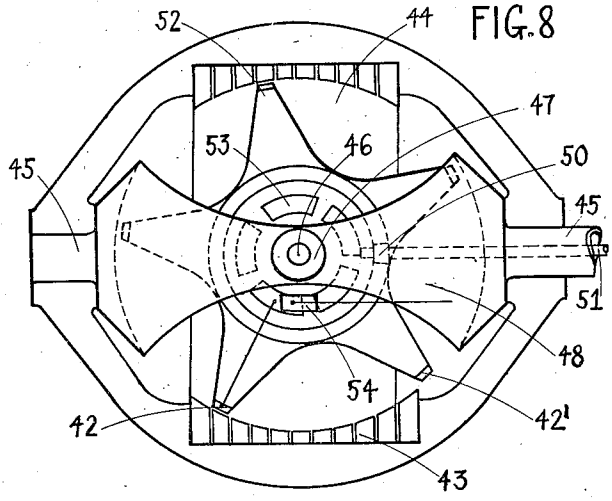

FIG. 4

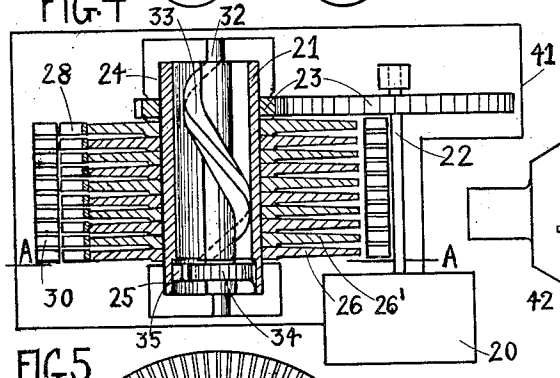

FIG. 9

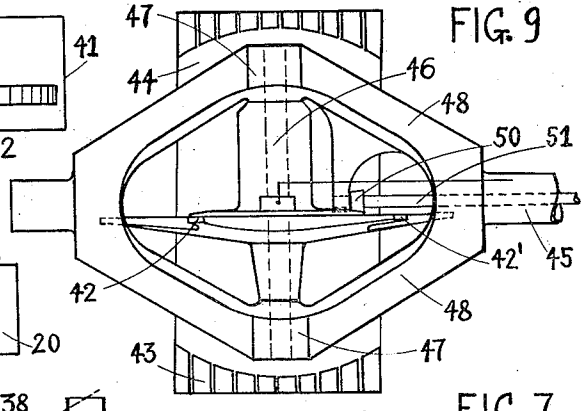

FIG. 5

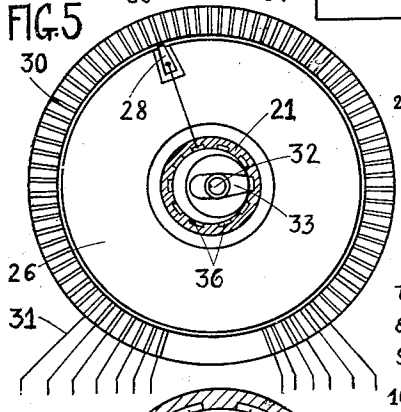

FIG. 6

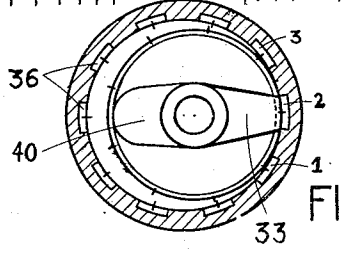

FIG. 7

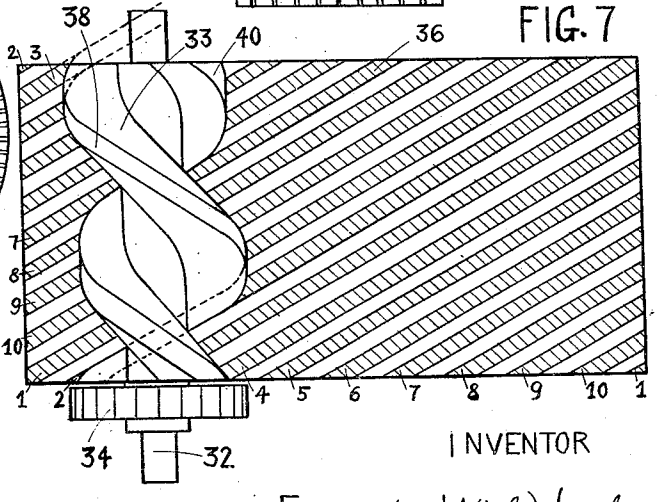

INVENTOR

Ernest Wildhaber

Aug. 18, 1936. E. WILDHABER 2,051,356

METHOD OF RECEIVING PICTURES

Filed May 6, 1927 3 Sheets-Sheet 2

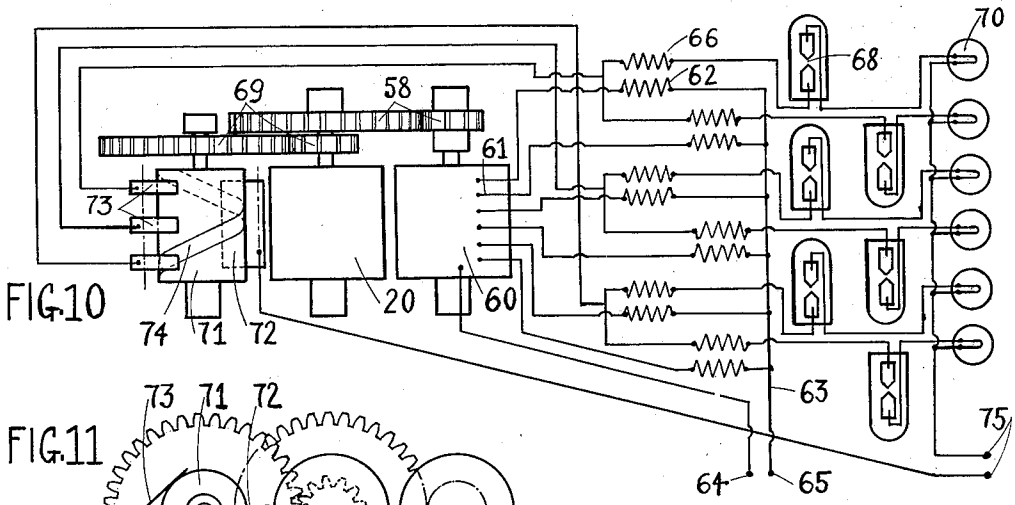

FIG.10

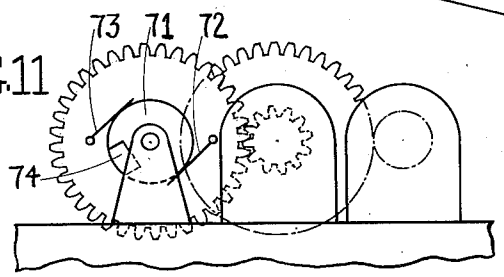

FIG.11

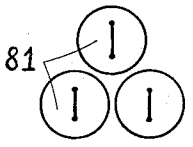

FIG.15

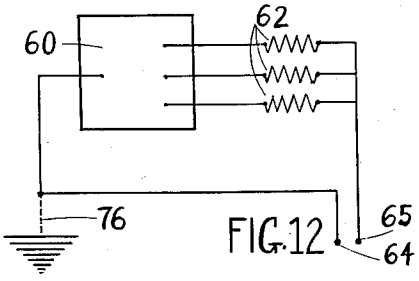

FIG.12

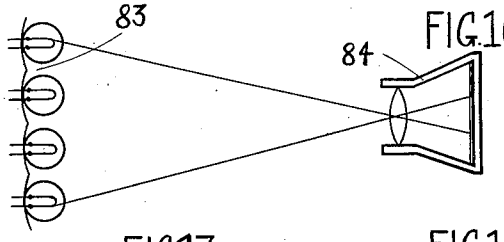

FIG.16

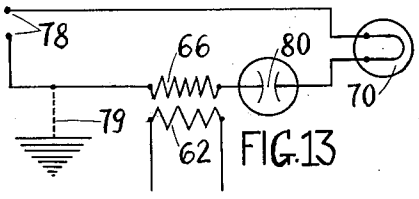

FIG.13

FIG.17

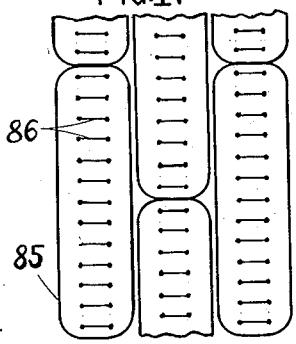

FIG.18

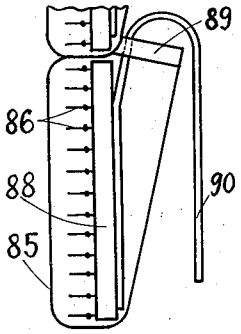

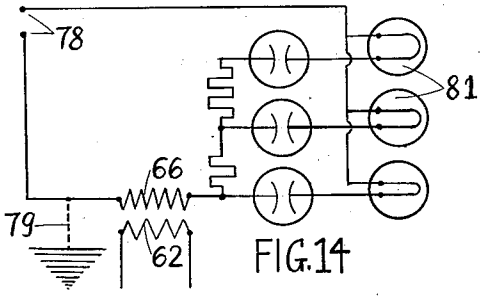

FIG.14

INVENTOR

Ernest Wildhaber

Aug. 18, 1936. E. WILDHABER 2,051,356

METHOD OF RECEIVING PICTURES

Filed May 6, 1927 3 Sheets-Sheet 3

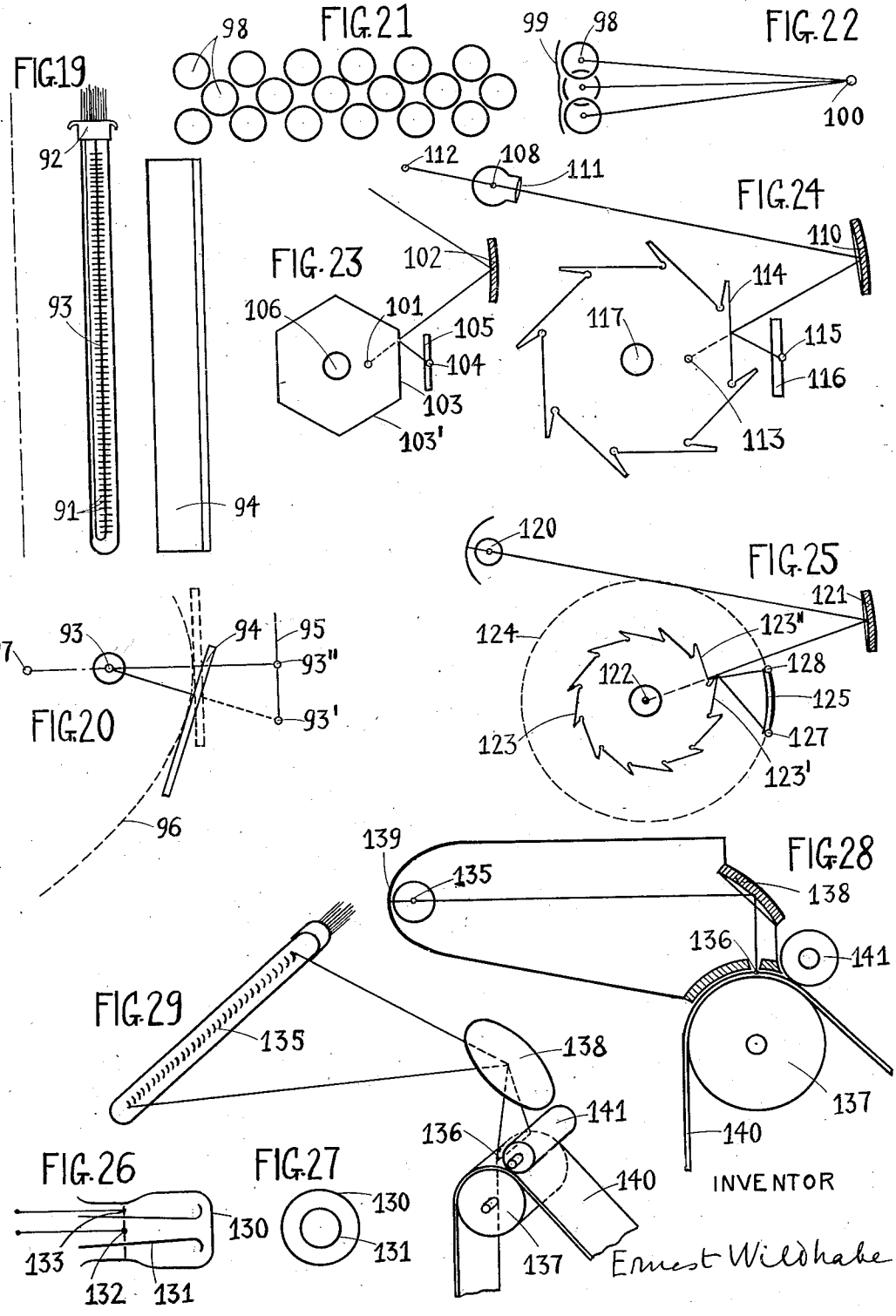

Patented Aug. 18, 1936 2,051,356

UNITED STATES PATENT OFFICE

2,051,356

METHOD OF RECEIVING PICTURES

Ernest Wildhaber, Brooklyn, N. Y.

Application May 6, 1927, Serial No. 189,418

35 Claims. (Cl. 178—6)

The present invention relates to methods of receiving pictures which are transmitted over a distance, and it may be applied either to transmission with wires or by radio. The invention refers to television, when the received picture, or pictures are made visible only, and to picture telegraphy including facsimile telegraphy, when the received picture is recorded and fixed. The term picture, as used in the following, is taken in its broader meaning, and is meant to include signs, letters and numbers.

One object of the present invention is to provide a method of receiving pictures in television, which produces stronger pictures than methods hitherto known. Another object is to provide a method of receiving pictures making possible a speed hitherto unattained. A still other object is to provide a method of receiving pictures in television permitting a maximum enlargement. A further aim is to provide a method of receiving pictures in television and telegraphy, with increased accuracy. Another aim is to provide a novel method for preserving light shades and half tones. A still other object is to provide a method for receiving and recording pictures more expeditiously. The chief aims are therefore briefly power, speed and quality of received pictures.

Other objects will appear in the course of the specification and from recital of the appended claims.

The invention is exemplified in the accompanying drawings, in which

Fig. 1 is a fractional view of a surface for receiving pictures according to the present invention.

Fig. 2 and Fig. 3 are diagrammatic views of two different embodiments of details, constructed in accordance with the present invention, and such as might be provided in connection with the surface shown in Fig. 1.

Fig. 4 is a plan view, partly a section, of a device for distributing the received electric current, preferably after amplification, successively to various points, which correspond to points of the transmitted picture.

Fig. 5 is a partial front view, partly a section along lines A—A of Fig. 4.

Fig. 6 is an enlarged view of the central part of Fig. 5.

Fig. 7 is a view of the inside rotary member shown in Figures 4, 5 and 6, the view being taken at right angles to its axis; and a development into a plan of the inside surface with which said member rolls together, the proportions being made slightly different for convenience, as compared with Fig. 4 and Fig. 5.

Fig. 8 is a plan view of a device for distributing the received current, differing from the device shown in Fig. 4.

In Fig. 8 the stationary top member is supposed to be taken off, so as to make the rotary parts visible.

Fig. 9 is a front view of the rotary parts, corresponding to Fig. 8, and indicating also some of the stationary parts.

Fig. 10 is a diagrammatic plan view of a device operating in accordance with the present invention, illustrative of a preferred way of distributing a received primary current and of providing secondary currents.

Fig. 11 is a side view corresponding to Fig. 10.

Fig. 12 is a diagram indicating a primary circuit alone.

Fig. 13 is a diagram illustrative of one secondary circuit.

Fig. 14 is a diagram illustrative of a plurality of secondary circuits which may be started by a single primary circuit. The arrangement indicated has the purpose of obtaining half shades or half tones.

Fig. 15 is a diagrammatic view of the arrangement of individual lights fed by secondary circuits of the character outlined by Fig. 14.

Fig. 16 is a diagram illustrative of one way of recording a transmitted picture.

Fig. 17 is a view of a form of incandescent lamps preferably used in connection with the present invention. These lamps contain a plurality of equal filaments forming part of different circuits.

Fig. 18 is a side view corresponding to Fig. 17.

Fig. 19 is a diagrammatic plan view, and Fig. 20 is a corresponding elevational view, explanatory of another embodiment of my invention as applied to television.

Fig. 21 is a diagram illustrative of an arrangement of individual lights, which represent points of a line of the transmitted picture.

Fig. 22 is a side view of the same.

Fig. 23 is a diagram of a method of receiving pictures in television, the method being slightly modified as compared with the method illustrated in Fig. 19 and Fig. 20.

Fig. 24 is a diagram further illustrating television according to the present invention.

Fig. 25 is a diagram illustrating television in another, modified embodiment.

Fig. 26 and Fig. 27 are diagrammatic views of a form of gas filled lamp without filament, as may

be used for receiving pictures in accordance with my invention.

Fig. 28 is a diagram illustrative of a preferred manner of receiving and recording pictures and telegrams.

Fig. 29 is a perspective view illustrative of the same.

Pictures received according to known methods in television and in picture telegraphy are either faint or slow. According to known methods a picture is reproduced in the following manner:

First the electric current received either by wire or in form of electromagnetic waves, is amplified. Then some form of energy which fluctuates in correspondance to the received current is successively applied to the different points of the picture to be reproduced. One way of doing this is by projecting a beam of light successively to the different points of the picture, the brightness of said beam of light being controlled by the fluctuating received current. The various existing methods have all this feature in common, that energy is applied to a point only during such an extremely short time as is allotted to this point by the received electric current. It is the time of reception of the total picture, divided by the number of points in the picture. Inasmuch as concentration of energy to a point or small area is limited, especially so, when said energy should fluctuate at an enormous rate, the total energy delivered to a point is very small, and this has made it hitherto impossible to obtain a bright picture in a time as short as compatible with television.

According to the present invention any desirable amount of energy, such as light, may be applied to the individual points of the transmitted picture, while keeping the time of reception well inside of the limits required for television. With the present invention any desired brightness of the picture received in television as well as any desired enlargement can be attained. On the other hand, if the method is used for transmitting and recording pictures and telegrams, a speed hitherto unheard of may be effected.

One principle of the present invention is to apply energy to the individual points of the received picture during a period which is a multiple of the time alloted to said points by the received electric current. According to the present invention the received electric current, after suitable amplification and possibly after transformation into some other form of energy, is used for starting other sources of energy, preferably lights, which in turn reproduce the individual points of the transmitted picture, the energy supply from these sources being maintained on each point for a comparatively long time, usually more than a hundred times longer than the time allotted to a point by the received circuit. A received current, after due amplification, starts so to say a number of relays, each of which serves to embody a point of the transmitted picture.

Another novel principle of the present invention is a way of reproducing the different points without resorting to modulating lights or other means restraining extreme speed of transmission through their inertia. Lights or other means are so disposed according to the present invention that their inertia has no influence on the speed of reproduction.

I will now proceed to describe my invention with reference to the embodiments shown in the drawings.

In Fig. 1 the numeral 11 denotes a picture surface, on which a transmitted picture may appear, in television or otherwise. Surface 11 is composed of a great number of individual lights 12, indicated as small circles. Each light corresponds to a point of the transmitted picture, and bright points of the original call for bright lights of the transmitted picture.

To avoid glaring, a suitable translucent screen may be provided in front of the lamps.

An individual lamp 12 is shown in Fig 2. It is provided with a filament 13, which is connected over a light sensitive cell 14, to two poles held under voltage by any suitable means. Inasmuch as I desire to introduce the principles of my invention separately, I have kept here the known principle of modulating lights, and may operate lamp 12 in the following manner: A beam of light, which is under the influence of the received current, is successively projected to light sensitive cells representing the individual points of the transmitted picture, and at one instant passes cell 14. If the beam of light is bright, it will change the electric resistance of light sensitive cell 14, and increased electric current will flow through the lamp 12, sufficiently to make its light perceptible. In accordance with the present invention a cell 14 is not only under the influence of said beam of light, but is also influenced by the light of the lamp which it operates. Part of the light of lamp 12 will then fall to cell 14 and further reduce its resistance. Lamp 12 will thus burn brightly, and continue burning brightly long after the primary beam of light or starting beam of light has passed to other cells. If a single picture is desired to be transmitted, the lights are left burning for a certain time, but in case of television, which demands a number of different pictures each second, energy supply is shut off before the starting beam of light again passes to cell 14. Means are then provided for automatically shutting off energy supply at periods. Such means will be described hereafter. Their effect is to keep the two poles of the light circuit under a constant voltage during and after passage of the starting beam of light, and to interrupt voltage before the subsequent passage of said beam.

A slightly different lamp 15 is indicated in Fig. 3. It contains itself a light sensitive element. It indicates a light sensitive element of somewhat unusual construction, which is suited to emit light, once it is started. The wires 16 are kept under voltage as the poles previously mentioned. They are connected with two electrodes forming an enclosed gap 18. Filling and degree of vacuum of lamp 15 is such, that a beam of light which passes through the lamp, may decrease electric resistance of the gap to such an extent, that electric current passes from one electrode to the other. Light is thereby emitted. Emission of light continues until the voltage is shut off, as explained with reference to Fig. 2.

It is noted that reception surface 11 bears some resemblance to the known illuminating advertising signs. It differs from them by being operated by impulses changing freely and not in a predetermined manner, and by being operated by two electric circuits, one determining the shape of the received picture, and the other for maintaining the picture a sufficient length of time.

With the present invention it is possible to do away with light sensitive cells in the reception of pictures. One way of doing this is illustrated in the Figures 4 and 5.

20 is an electric motor running in synchronism with the motor of the sending station. Motor

20 drives a hollow shaft 21 of what may be called a distributor, by means of shaft 22, and a gear pair 23. Hollow shaft 21 is journalled in two bearings 24, 25, and carries a number of disks 26, 26', seen in front view in Fig. 5. Each disk contains an electric conductor 28 suitably insulated from the body of the disk and slightly protruding over the outside periphery of the disk. The purpose of this conductor is to effect electric contact successively with parts 30 arranged on the periphery of disks 26. Each part 30 is connected with an individual wire 31, of which only a few are shown. In the embodiment shown parts 30 occupy part of the circumference and more than half of it.

The disks 26 rotate at a very high speed. For this reason conductor 28 is kept slightly back of the parts 30, so that no actual, physical contact is made, while a certain degree of electric contact is yet effected. The high speed of disks 26 is also the cause for providing continuous disks instead of mere arms, thus reducing air resistance by avoiding displacement of air except through air friction. The total number of parts 30 provided on all disks 26 together equal the number of lamps 12 on the receiving surface, or a fraction thereof, as will be explained hereafter. Inasmuch as the required number of parts 30 or contacts 30 cannot be disposed on the circumference of a single disk, according to the embodiment indicated in Fig. 1, a plurality of disks is provided. The means for shifting electric contact from one disk to another will now be explained:

Inside of hollow shaft 21, and slightly eccentric with it, another shaft 32 is provided. It contains a helicoidal member 33 and a gear 34 rigidly secured to member 33. Gear 34 receives motion from an internal gear 35 formed by teeth being cut on the inside of shaft 21 and forming part of it. In Fig. 4 I have shown ten disks and may provide then a ratio between gears 34 and 35 of 10 to 9. Hollow shaft 21 contains on its inside ten electric conductors 36, suitably insulated from the metallic shaft. Each of these conductors is electrically connected with one of the disks by a wire. For convenience insulations have not been shown in the drawings. Conductors 36 are of helical form and are equally spaced on the internal circumference of shaft 21, see Fig. 6. In Fig. 7 conductors 36 are shown as straight lines in development to a plane, the full circumference being developed. Helicoidal member 33, shown in larger scale and with somewhat different proportions in Fig. 7, contains one helicoidal projection 38 of such diameter as to make contact with the surface of the conductors, and of a length so as to make a single complete turn. It may also contain another, oppositely disposed helicoidal projection 40 of smaller diameter, serving as a counterweight. For the sake of clearness the counterweight is not indicated in Fig. 4.

The operation is as follows:

The helicoidal projection of member 33 is in contact with one of the conductors 36, namely with number 2 in Fig. 7. When member 33 turns on its axis 32, and shaft 21 turns on its own axis, the area of contact travels in the direction of the axes. Contact with any one conductor 36 lasts a complete revolution of shaft 32. After every revolution of member 33 contact will shift to another conductor, by reason of the gear ratio between shaft 21 and 32, which ratio differs from one to one and equals 9 to 10 in the present case. If in Fig. 7 direction of rotation is assumed such, that the zone of contact moves downward, towards gear 34, then the position shown represents nearly the end of contact with conductor number 2, and new contact will soon start on conductor number 3, as indicated in dotted lines near the top of member 33.

With a device as shown, contact is made with each conductor 36 during a full revolution of shaft 32 or during $\frac{9}{10}$ revolution of the main shaft 21 and disks 26. After each $\frac{9}{10}$ revolution of the disks 26 contact is shifted automatically to another disk, that is to say to the conductor 28 of another disk. Parts 30 are therefore provided on part of the circumference only. If the just described device is so constructed, that electrical contact takes place with one conductor 36 only, at any one moment, even in the moment of shifting contact, then parts 30 are disposed on $\frac{9}{10}$ of the circumference. Usually however electric contact is liable to be made simultaneously with two conductors 36 in the moment of shifting contact. Preferably picture transmission is interrupted in such moments. Parts 30 are then arranged on less than $\frac{9}{10}$ of the circumference. In order to avoid lines of incomplete reproduction, transmission is stopped in both the sending and the receiving set in such moments. After the interruption, reproduction continues at the place where it had stopped.

In the illustrated case it takes nine revolutions, until all the disks 26 have successively transmitted contact and until all the parts 30 have been swept once. In this time one picture is completed. Reception then starts anew on the first disk.

The whole set may be enclosed in an air tight casing indicated with lines 41 in Fig. 4. Any desirable degree of vacuum may then be provided inside of the casing, and the casing may be filled with any suitable gas, if so desired, to decrease air resistance and electric resistance between conductor 28 and parts 30, between which no physical contact is made.

Another device for mechanically distributing electric current is indicated in Fig. 8 and Fig. 9. This device can receive pictures continuously, without interruption, while also avoiding lines of incomplete reproduction.

42 denotes a conductor similar to 28, and suitable to make electric contact with parts 43 arranged on the inside of a spherical surface 44. Conductor 42 is rotatable in the first place on an axis 45, which passes through the center of spherical surface 44. In addition to being rotatable on axis 45, it may also be turned on an axis 46, which is journalled in two bearings 47 formed by arms 48 integral with shaft 45. Turning motion on axis 46 is effected in timed relation to turning motion on shaft 45 by such means as a pair of bevel gears 50, of which the pinion shaft 51 is concentric with shaft 45. Shaft 51 is suitably journalled in front of the bevel pinion and in shaft 45. It is either held stationary or turned in timed relation to the rotation of shaft 45.

The ratio between the two turning motions is so selected, that conductor 42 moves a distance equal to the distance between adjacent parts 43 per revolution of shaft 45. Parts 43 are all arranged in one continuous spiral, in such manner, that they may all be successively covered by conductor 42 as it performs its combined turning motion. After conductor 42 has swept the whole zone of parts 43, it leaves this zone, being subject to continuous rotation. Inasmuch as the spiral formed by parts 43 starts and stops abruptly, an-

other conductor disposed on an adjacent arm 42' may start contact immediately after conductor 42 has left the parts 43, so that reproduction takes place without any interruption. In the figure five contact arms are indicated, which form part of the same body, and which come in contact successively. A picture is completely reproduced, after one arm has passed all the parts 43, and a new picture starts with a new arm coming into contact. In order to avoid disturbances from the arms returning on the side 52, where they pass parts or contacts 43 again, electric contact is shut off from them while returning. A segment 53 is provided for each arm, suitably insulated from the whole body and from the arm proper, receiving electric contact from a brush 54 except when returning on side 52. This brush, indicated merely as a square, moves with the body constituted by shaft 45 and arms 48. Electric current, preferably the received and suitably amplied electric current is led to brush 54 in any suitable way, then passes to the conductor 42 which moves in the zone of parts 43 in the direction of their spiral, is distributed successively to parts 43 and passes then through wires (not shown) preferably to start electric current in secondary circuits, as will be explained hereafter.

The principle of operation will be further explained with reference to Fig. 10 and Fig. 11.

20 is an electric motor running in synchronism with the sending station and rotating distributor 60 by means of gears 58. The received electric current is first suitably amplified, and then led to distributor 60, passes through one of the numerous parts 61, depending on the instantaneous position of the rotor, and through one of the induction coils 62 at a time. All these coils are connected with a central wire 63. In short the amplified received current, which may be called primary current, passes from point 64 to point 65, through distributor 60.

Secondary induction coils 66 are suitably coupled with coils 62. They belong to secondary circuits obtaining energy from a separate source, and preferably containing a gap in its metallic conductors.

The gap in the metallic conductors may be constructed in various ways and is indicated in Fig. 10 at 68 in the form of an enclosed arc gap. Preferably metallic poles of the gap are provided, in which case the light created in the gap by electric current may not be sufficient for the present purposes. Separate incandescent lamps 70 as shown may then be provided in addition to the gaps.

It is well known, that a higher voltage is needed to start an electric arc on a given gap, than to maintain said arc, once it is started. Let it be assumed at first, that the parts of the gap of a secondary circuit are kept under a constant voltage, which is large enough to maintain electric current across the gap, once the current is started, but which is not large enough to bridge the gap all by itself. To reproduce a point or bright spot of a picture, additional voltage is induced in a secondary coil 66 by primary current passing through coil 62, the proportions being such, that with the additional voltage the gap of the secondary circuit may be bridged. Once the gap is bridged, electric current will continuously pass through the secondary circuit and emit light from stationary lamp 70 during a period which is a multiple of the time allotted to a reproduced point by the primary current. Light will be continuously emitted from lamp 70, until the secondary current is artificially stopped. In the case of television voltage should be shut off in a secondary circuit, before the same point of the picture area is being reproduced a subsequent time.

A device for shutting off voltage in proper time is outlined at 71. It consists of brushes 72, 73 applied to a member rotated by motor 20 with gears 69, in such manner that it turns around once per one complete picture.

The said member is an electric conductor of cylindrical form, and contains a helical groove 74 of one turn, filled with insulating material. Brush 72 is wide enough to continuously apply voltage to the whole cylindrical member, but the brushes 73 are narrower, and get out of electric contact, when they pass over the helical groove 74. In other words voltage is shut off and later put on again once every revolution of interrupter 71. Each brush 73 is connected with a plurality of secondary circuits, it being unnecessary that each secondary circuit has its own interrupter. In Fig. 10 each brush 73 is shown connected with two secondary circuits. In actual practice however a brush 73 of the interrupter is preferably connected with more than a hundred of secondary circuits.

Constant voltage from any desirable source, such as an electric dynamo, is applied to the points 75. One of these points is connected with brush 72 of interrupter 71. Unless interrupted, voltage passes through brushes 73, secondary coils 66 to gaps 68. The other point 75 is connected in parallel with incandescent lamps 70 and with the other side of gaps 68. When sufficient voltage is induced in a secondary coil, the gap is bridged, and electric current is maintained in the secondary circuit from the voltage applied to the points 75, until interrupted by interrupter 71.

It is understood, that lamps 70 preferably are differently arranged than contact parts 30 or 43 of the distributor of primary current. Lamps 70 are preferably arranged in a plane, but could also be arranged in a curved surface if so desired, especially in a spherical or cylindrical surface. The location of the reproduced points should exactly correspond to the location of the points of the original picture, as known. Preferably the points of a line are successively transmitted which line extends all over the picture area. This line usually is a straight line, which gradually sweeps the whole surface of the picture area.

The primary circuit will be separately explained with reference to Fig. 12. The received electric current, after suitable amplification, passes from point 64 to point 65, or oppositely. Point 64 is connected with a distributor 60, whence it is directed successively to numerous branches, of which each contains a primary induction coil 62. Coils 62 are connected in parallel with point 65. One of the points 64, 65 may be grounded, if so desired. I have indicated an optional grounding connection in dotted lines at 76.

A single secondary circuit is indicated separately in Fig. 13. The points 78 are kept under voltage which is usually constant and which is periodically interrupted. One of the points 78 may be grounded, if so desired, as indicated in dotted lines at 79. The voltage of one of the points 78 is transmitted through secondary coil 66 to an enclosed gap 80; and the voltage of the other point 78 is transmitted through incandescent lamp 70 to the other side of gap 80. Additional voltage may be induced in the secondary circuit by primary coil 62.

The gap 80 in the metallic conductors is here of a slightly different aspect than gap 68 of Fig. 10, having however the same characteristic of operation: It needs more voltage to start current across the gap, than to maintain it. Many other forms of gaps may be devised, further electrodes may be added, if so desired. Such forms will all more or less perfectly satisfy the present purpose, when they keep the above said characteristic.

In providing secondary circuits or relays of the described character, I introduce a novel principle to this field. Ordinary relays are used to increase or amplify an electric current, that is to provide another current containing the same fluctuations but an increased power. The here used secondary circuits or relays however serve in the first place for increasing or amplifying the duration of a primary current. Secondary currents are provided, which last much longer than the primary current, which latter is used merely for starting.

The lights 73, operated by secondary circuits, as described, are suited to reproduce bright points, and may be used without change to reproduce line drawings and written matter.

For also reproducing half tones or half shades, I may provide an arrangement as indicated in Fig. 14. A plurality of secondary circuits of different gap resistance are provided, namely three according to Fig. 14, each operating an incandescent lamp 81 and all started from the same secondary coil 66, which is inductively connected with primary coil 62. Lamps 81 may be made of equal, or frequently of different candle power. Constant, but periodically interrupted voltage is applied to the points 78. A moderate voltage, induced in coil 66 by coil 62, added to the constant voltage provided, will overcome resistance only in the circuit of lowest resistance and bridge only a single gap. If a very large voltage is induced in coil 66, all the gaps will be simultaneously bridged, and electric current will be maintained by the said constant voltage in all three circuits, until interrupted in a manner previously described. While I have shown standard resistance to point out the difference of the circuits, preferably gaps of different resistance are provided in the different circuits. It is material, that the circuits have a different starting resistance.

With the described arrangement a transmitted bright spot will be reproduced by three burning lights, a less bright spot by two, and a half shade by one burning light. In this way a well graded reproduction may be obtained. If individual lamps are provided for each light, the three lamps representing one spot are preferably placed close together, as indicated in Fig. 15, where the lamps are also denoted with numeral 81.

A received picture may be recorded in a way such as outlined in Fig. 16, where 83 denotes a picture surface covered with lights representing the various points of the picture. Back of the lamps proper concave white surfaces or concave mirrors are disposed, for concentrating light in the direction of a photographic camera 84, with which a picture of the reproduction appearing on surface 83 may be taken.

In the picture surfaces referred to, I may use individual lamps, each representing a single electric circuit, but preferably I provide lamps containing a plurality of electric circuits operated independently of each other. Lamps may be provided as indicated in the Figures 17 and 18, where 85 denotes a glass container, and 86 are the individual incandescent wires operated by different secondary circuits. The shape of the glass container, as indicated in Fig. 18, permits to mount the different wires on a member 88 before placing them in the glass, while at the same time permitting to place the lights of longitudinally adjacent lamps so closely together, that the spacing of the incandescent wires is uniform even over a series of lamps. The various wires serving the different lights of a container are admitted through the opening 89, through which the lamp is also assembled. Opening 89 is sealed airtight after assembling, as in other incandescent lamps. The lamps are secured to a suitable surface, such as a wall by means of flat and preferably metallic holders 90. For convenience the wires serving the lights are not indicated. To represent a picture surface, a series of such lamps are placed together, for instance, as indicated in Fig. 17.

The embodiment of the invention, as hitherto outlined and where so many lights are provided as are points in the reproduced picture, permits of a maximum enlargement and maximum power of the received picture, but requires considerable expenditure, as is readily understood.

Another embodiment of the present invention will now be described, which is much less costly, and which is preferred for that reason in the majority of cases, both for television and for recording pictures.

According to this embodiment separate lights are provided only for the points of a line or of a narrow zone of the picture, instead of providing lights for the points of the entire picture surface. The reproduced line is then moved over the picture surface, so as to gradually sweep the whole surface. Reference is made to Fig. 19 and Fig. 20. The lines 91 represent incandescent wires, projecting from a suitable holder, and enclosed in a glass tube. Wires 91 receive electric energy indipendently of each other from electric circuits entering the glass tube at its one end 92, which is sealed airtight. The various lights form a straight line 93 which is projected as a point in Fig. 20. A mirror, such as a plane faced mirror 94 is arranged in front of lights 91. Mirror 94 is movable, and may be so moved that it projects the line 93 in such manner as to sweep a plane surface.

In Fig. 20, 93' is the so-called virtual image of object (or lights) 93, as formed by said plane mirror 94. Corresponding points of an object and of its image lie on the same perpendicular to the plane mirror surface and at equal distances from said surface, as shown in Fig. 20. The image can be perceived by an observer standing at the left of Fig. 20 and looking under and past lights 93. When the mirror is moved, the virtual image formed of object 93 moves too, and through motion of the mirror as further described, can be made to move in a straight path 95. The virtual image 93' of the line of light 93, which is perpendicular to the drawing plane of Fig. 8, then gradually sweeps a plane (95), on which the transmitted picture will appear to an observer. Line 93—93' is an auxiliary line, namely the perpendicular to the plane of the mirror.

In the position of mirror 94, which is shown in full lines, the image of line 93, as seen in the plane mirror 94, will appear at 93'. In the position of the mirror shown in dotted lines the

image of line 93 appears at 93''. If it is desired, that the image of line 93 sweeps a plane 95, a plane in which the transmitted picture will appear to be, then mirror 94 should strictly be so moved, that its reflecting plane bisects any radius 93—93' and is perpendicular to such radius, see Fig. 20. In Fig. 20 the reflecting line of the mirror would then envelop a parabola 96, as well known. For practical purposes, where the picture may slightly deviate from a plane without drawback, it is sufficient, to swing the mirror about a center of curvature of parabola 96, which may be determined in known manner. In case the picture is desired to appear on an area of which 93'' is a central point, then the mirror is preferably swung about a center 97, the center of curvature of the parabola at its vertex. Center 97 is twice as far away from the vertex of the parabola or from the dotted position of the mirror, as compared with point 93, which is the focus of parabola 96, as known.

Instead of lines of light 93, Fig. 19, narrow areas of lights 98 may be provided, if so desired, see Fig. 21. The individual lights may be provided moreover with concave white surfaces 99 (Fig. 22) or even with concave mirrors, which tend to concentrate light towards a point or line 100.

According to Fig. 19 and Fig. 20 images of an actual source of light were made by a movable mirror. Fig. 23 illustrates a case, where images of an imaginary source of light 101 are made. This source 101 is itself the real image of a source of light as indicated in Fig. 19 or Fig. 21, the image being effected in known manner by a concave spherical mirror 102. The image of the imaginary source of light 101, as made by plane mirror 103, appears at 104, which is another way of saying that the real image 101 produced by concave mirror 102 is deflected so as to appear at 104. Preferably a translucent screen 105 is provided, so that the image 104 may be seen from any angle. Mirror 103 is rotatable on axis 106, and if source 101 is placed midway between the plane of mirror 103 and turning center 106, in analogy to the proportions used in Fig. 20, then the total picture will appear substantially on a plane as mirror 103 is rotated. Translucent screen 105 may be made exactly plane. Preferably a plurality of mirrors 103, 103' are provided, arranged in a polygon. For television the mirrors are turned continuously on their axis 106, and the reflection of one mirror will follow the reflection of another. Point 104 will then successively sweep the picture surface.

A slightly modified arrangement is indicated in Fig 24. A line of light, representing a line of a transmitted picture and seen as a point 108 in Fig. 24 is projected towards concave spherical mirror 110 by such means as individual lenses 111. Lenses 111 furnish an imaginary picture of 108 at 112. Concave mirror 110 is so placed as to form a real image of 112 at 113, at least if the rotary mirrors 114 would be removed. The mirrors 114 deflect the image, which appears at 115 instead of 113. In operation, the positions of line of light 108, of concave mirror 110, image 113, and translucent screen 116 remain unchanged, while mirrors 114 turn continuously on their axis 117. The image 115 of line 108 then moves on the picture surface, that is on screen 116 and sweeps the whole surface. It is understood, that as the line under reproduction moves on the picture surface, corresponding points are transmitted from the original. The location of a point covered at the sending station, and the location of a corresponding point reproduced at the receiving station, must naturally be relatively identical.

When the light from the concave mirror 110 is projected to mirrors 114 in the manner indicated in Fig. 24 or in the subsequent Fig. 25, the mirrors are preferably disposed as shown; that is to say the mirrors are disposed unsymmetrically with respect to the projection of the axis of rotation to the plane of a mirror. The projection of the axis of rotation divides the plane surface of a mirror into unequal parts. This arrangement keeps the bulk of light inside of the mirror surface in the various positions of a mirror.

In the embodiment shown in Fig. 25, the image of a line of light 120 is projected by a concave mirror 121 into the turning center 122 of rotary plane mirrors 123. This image is so deflected, that it appears on a concentric cylindrical surface 124, a part of which is embodied by a curved translucent screen 125. The mirrors are here shown in a position where the change is made from one mirror to another, and from one picture to the subsequent one. The image of 122 referring to mirror 123' is at 127 on one end of the picture surface, and the referring to mirror 123'' appears at 128 on the other end of the picture surface. One mirror is getting out of action while the other starts in.

In Fig. 26 and Fig. 27 I have outlined a form of gas filled lamp without filament, as might be provided in accordance with my invention, to give a milder light, especially for picture surfaces of the character indicated in Fig. 1. Known lamps of this type are ordinarily made in the form of long tubes. In the present case the shape is determined from the requirement to represent a luminous point or small area. The lamp consists of an outer bulb 130 and an inner tube 131, which are in connection with each other. Voltage may be applied at 132 to the electrode of the inner tube, and to a ring shaped electrode 133 disposed in the outer bulb. Bulb and tube are sealed. Electricity may pass from one electrode to the other, through the top of the lamp, and hereby lights the bulb.

A preferred embodiment of my invention, as applied to receiving and recording pictures and telegrams, is indicated in the Figs. 28 and 29.

A light is provided for each point of a line 135 of a reproduced picture. An arrangement of lights along a straight line is evident from Fig. 29, and is seen to be of the same character as the arrangement shown in Fig. 19. An image of line 135 is effected at 136 along a straight line of a cylindrical roll 137 by a concave spherical mirror 138. Preferably concave white surfaces 139 are provided back of the lights, which throw a great part of the light towards mirror 138 and image 136. Moreover image 136 is preferably reduced as compared with the line 135. A sensitive receiving strip 140 is fed over roll 137 past said image, and held on roll 137 by another roll 141. Both rolls turn on their respective axes. Each point is thus gradually reproduced by a light of line 135, maintained a much longer time than corresponds to the transmission of such a point. The suitably amplified received electric current is led successively to primary circuits corresponding to the points of line 135, and may then start the secondary circuits feeding the lights. After having covered the last point of

line 135, the first point is again started with and a subsequent line is being reproduced. The general principle is the same as already explained with reference to Fig. 10. Current in a secondary circuit is also interrupted before the corresponding point of line 135 is being transmitted again.

In the described manner very much more light or broadly energy can be transmitted to each point of a picture than was hitherto possible, and a very high speed of transmission can be maintained.

If a full size reproduction of the somewhat coarse line 135 is permissible, the lights may be placed directly adjacent the cylindrical roll 137, and mirror 138 may be dispensed with. Usually however an arrangement is preferred which provides an image of line 135, as indicated in Fig. 28 and Fig. 29.

While I have shown certain new elements and combination of elements, it is understood, that such elements may not only be used in the specific combinations shown, but also in other combinations without departing from the spirit of my invention. For definition of the limits of my invention I rely upon the annexed claims.

What I claim is:

1. The method of receiving pictures, which consists in amplifying a received electric picture current, in starting an individual light for each bright point of a row of points of the transmitted picture under control of said current, in maintaining said light during a period which is a multiple of the time allotted to a point by the received electric current, and in quenching the light a predetermined time prior to the arrival of succeeding current impulses for the picture points.

2. The method of receiving pictures, which consists in leading a received electric picture current after suitable amplification to individual circuits, to induce voltage in secondary circuits, maintaining electric current in said secondary circuits during a positively controlled time longer than the time allotted to a point of the transmitted picture by the received current, and producing light under control of the current in each secondry circuit.

3. The method of receiving pictures, which consists in providing individual lights for each point of a line of a transmitted picture, said lights being operated by individual secondary transformer circuits suited to deliver a constant flow of energy, in successively inducing voltage in timed interrelation in said secondary transformer circuits with a single electric current, and in maintaining direct current in said secondary circuits.

4. The method of receiving pictures, which consists in reproducing a line, point after point, by radiating light from said points, in governing radiation with a received electric current, in maintaining generally constant radiation from a point during a period which is a multiple of the time allotted to said point by said received current, in forming an optical image of said reproduced line on a light sensitive picture surface, and in displacing said image and said picture surface relatively to each other so that said image sweeps over the picture surface.

5. The method of receiving pictures, which consists in reproducing a line, point after point, by radiating light from said reproduced points, in governing radiation with a received electric current, in maintaining generally constant radiation from a point during a period which is a multiple of the time allotted to said point by said received current, in projecting the reproduced line to a light sensitive picture surface, and in changing the relation between said projected line and the picture surface so that said line gradually sweeps over said picture surface.

6. In a device for receiving pictures, a plurality of relays for embodying points of a line of a transmitted picture with sources of radiant energy, said relays being suited to maintain operation indefinitely once they are started, means for successively starting said relays with a received electric picture current, and means for interrupting the operation of each relay a predetermined time prior to the time that said electric current is applied for starting the relay.

7. In a device for receiving pictures a source of radiation embodying a point of a transmitted picture, a secondary electric circuit for supplying energy to said source, a primary circuit inductively connected with said secondary circuit, and means for maintaining current in said secondary circuit during a period in excess of the time allotted to said circuit by the current of said primary circuit.

8. In a device for receiving pictures, a plurality of electric circuits for embodying points of a line of a transmitted picture with sources of radiant energy, means for starting current in said circuits by the amplified impulses received from a sending station, means for imparting electric energy to said circuits during periods in excess of the time allotted to a circuit by said impulses and means for interrupting the current in each of said circuits a predetermined time prior to the time that said impulses become operative for starting current therein.

9. In a device for receiving pictures, a plurality of centers of light radiation, means for successively starting radiation from said centers in predetermined timed interrelation, means for maintaining generally constant radiation from a center during a predetermined interval longer than the applied signal, joint stationary means for forming stationary optical images of said centers adjacent a light sensitive picture surface, and means for feeding said surface past said images.

10. In a device for receiving pictures, a plurality of centers of light radiation disposed in less than five adjacent and parallel straight lines, means for successively starting radiation from said centers in predetermined timed interrelation, means for maintaining generally constant radiation from a center during a predetermined interval longer than the applied signal, joint means for forming optical images of said centers adjacent a light sensitive picture surface, and means for moving said images and said picture surface relatively to each other so that said centers of radiation successively reproduce the whole picture area.

11. In a device for receiving pictures, a plurality of secondary electric circuits for embodying the points of a line of a transmitted picture, the metallic conductors of said circuits containing gaps suited to offer a larger resistance for starting electric current in said circuits than for maintaining said current, means for starting electric current across said gaps, and maintaining said current for a period longer than the signal, and means for interrupting the current in said circuits a predetermined time prior to each starting period.

12. In a device for receiving pictures, a plu-

rality of interconnected electric circuits including elements which require different impressed electromotive forces respectively for greatly reducing the resistance of the circuits and thereby initiating the flow of unidirectional electric current therein, each circuit containing an electric light and means for causing the light to glow after the signal has been removed.

13. In a device for receiving pictures, a plurality of adjacent individual centers of radiation suited to represent points of a line of a transmitted picture, means for successively controlling radiation from said centers, means for simultaneously feeding energy at a constant rate to at least ten of said centers and means for interrupting the supply of energy to said centers a predetermined time prior to the time that said radiation controlling means becomes effective to control the radiation therefrom.

14. In a device for receiving pictures, a plurality of adjacent individual lights suited to represent points of a straight line of a transmitted picture, stationary means for forming an optical image of said lights adjacent a curved light sensitive receiving strip, and cylindrical rolls for feeding said strip.

15. Apparatus for setting up television images each within the period of persistence of vision under control of image current comprising a plurality of light emitting means, one for each elemental portion of the image field, a source of energizing current for said light emitting means to cause them to emit light when energized, means including a source of image current having variations corresponding to the tone values of successively scanned elemental areas of a field of view for controlling the supply of current from said source of energizing current to said light emitting means in succession and periodically without interruption for repeatedly setting up television images, each image being set up within the period of persistence of vision, and means for causing each light emitting means when energized to remain energized by current from said source for a time after the controlling means has ceased to control the energization of said light emitting means.

16. Apparatus for setting up television images each within the period of persistence of vision under the control of a source of image current having variations corresponding to the tone values of successively scanned elemental areas of a repeatedly scanned field of view, each scanning taking place within the period of persistence of vision, comprising a plurality of light emitting means each for controlling the tone values of a portion of the image field, means including said source of image current for controlling the energization of the light emitting means in succession and repeatedly without interruption for causing said light emitting means to emit light to produce television images, each image being produced within the period of persistence of vision, and means for causing the energization of said light emitting means to be sustained for a period after said controlling means has ceased to control said light emitting means.

17. The method of reproducing transmitted pictures which consists in energizing light sources under control of received current impulses varied in accordance with the varying intensities of light and shadow of elemental areas of a transmitted picture to cause them to emit light in maintaining the emission of light for a predetermined time after the cessation of the current impulses causing the energization of said light sources, and in causing the emission of light to cease a predetermined time prior to the arrival of succeeding current impulses.

18. The method of reproducing transmitted pictures in accordance with received signal energy impulses which consists in igniting glow lamps by the received current impulses varied in accordance with the varying intensities of light and shadow upon elemental areas of a transmitted picture, in maintaining the glow after ignition in the absence of signals, and in quenching the glow a predetermined time prior to the arrival of succeeding signaling impulses.

19. The steps in the method of reproducing transmitted pictures by causing the emission of light from light sources in a sequential manner in accordance with received signal energy impulses varying in intensity proportional to the varying intensities of light and shadow on elemental areas of a transmitted picture which consist in maintaining the emission of light from each of the light sources for a predetermined time period after the cessation of signal impulses causing the emission of light, and in causing the emission of light to cease a predetermined time prior to the arrival of succeeding signal impulses.

20. An apparatus for reproducing transmitted pictures which includes a plurality of glow lamps arranged in successive adjacent lines thereon, means for sequentially impressing on the various glow lamps of the several lines potentials corresponding to the intensity of light and shadow of a transmitted picture, a source of biasing potential connected with each of the glow lamps for continually impressing thereon biasing potentials of a value less than the ignition potentials and greater than the extinction potential to maintain the glow after ignition has once been effected and signals have ceased, and means for quenching the glow of said lamps at regular predetermined intervals prior to reoccurrence of signaling impulses for reigniting the respective lamps.

21. The method of receiving pictures which comprises amplifying a received electric current, in starting an individual light for each bright point of a row of points of the transmitted picture under control of said amplified current, controlling each of said lights by energy externally applied thereto for a period which is a multiple of the time allotted to a point by the received electric current, to maintain said light during said period and interrupting the supply of energy to said lights a predetermined time prior to the arrival of electric current for starting the lights.

22. A method of electro-optical image production, which comprises amplifying a received image current, starting individual lights for the elemental areas of the image respectively in succession under control of said amplified current at a rate such that all the lights appear to an observer to start simultaneously, controlling each of said lights by energy externally applied thereto for a period which is a multiple of the time allotted to a point by the received image current to maintain said light during said period, and repeating this cycle of operations without any delay therebetween which would make the repetitions discernible to the eye of an observer.

23. Means for producing images which comprises means for receiving image current representative of black and white and intermediate

tone values of the object field of which images are to be produced, a plurality of light sources for a row of elemental areas of the image respectively, means for placing said light sources under control of said received current in succession, and means external to said light sources for maintaining each of them in operation for a definite period after cessation of the control thereof by said current to cause the emission of light of an intensity corresponding to that of the corresponding portion of the object field.

24. Means for producing images which comprises means for receiving image current representative of black and white and intermediate tone values of the object field of which images are to be produced, a plurality of light sources for a row of elemental areas of the image respectively, means for placing said light sources under control of said received current in succession to cause the emission of light of an intensity corresponding to that of the corresponding portion of the object field and for maintaining substantially unaltered the light from each of said sources after the cessation of control by said current for a definite period much greater than that during which said row of light sources are under control of said current.

25. An apparatus for setting up television images comprising a plurality of light emitting means, one for each elemental portion of the image field, means external to said light emitting means for energizing them to cause them to emit light, means including a source of image current having variations corresponding to the tone values of successively scanned elemental areas of a field of view for controlling the energization of said light emitting means one at a time in succession at a rate such that to an observer they appear to be simultaneously energized and for repeating said successive energization without any delay which would be discernible to an observer, and means for causing each light emitting means when energized to remain energized by energy from said source external to said means for a time after the controlling means has ceased to control the energization of said light emitting means.

26. The method of producing images which comprises amplifying a received electric current representative of black and white and intermediate tones of the elemental portions of the object field of which images are to be produced, successively establishing a light emission for the elemental portions in turn of elemental strips of the image under control of said amplified current and corresponding in intensity to that of the corresponding portion of the object field and causing the light emission for each elemental portion to take place for a period many times greater than that necessary to establish said emission, which period is independent of the amplitude of said current controlling said emission.

27. Means for producing images which comprises means for amplifying received electric current representative of black and white and intermediate light tone values of the elemental portions of the object field of which images are to be produced, means for successively establishing a light emission for the elemental portions in turn of elemental strips of the image under control of said amplified current to cause the emission of light of an intensity corresponding to that of the corresponding portion of the object field, and means for causing the light emission for each elemental portion to take place for a period many times greater than that necessary to establish said emission, which period is independent of the amplitude of said current controlling said emission.

28. Apparatus for receiving pictures which comprises means for amplifying a received electric current, a plurality of circuits each including a transformer, means in each of the secondary circuits of said transformers for greatly reducing the resistance of said secondary circuits when the electromotive force induced therein is increased to a sufficiently high amplitude, means for successively associating the primary transformer circuits with the amplified received current to cause electromotive forces to be induced in said secondary transformer circuits in succession, and means under control of the currents in said secondary circuits for controlling the production of the picture.

29. An apparatus for producing images electro-optically comprising a source of light, an electric circuit for controlling the energization of said light source to control the light emission thereof, means in said circuit the resistance of which abruptly decreases when the voltage impressed thereon is increased to a sufficiently high value, means for impressing a voltage of at least said value upon said device to initiate the flow of current in said circuit, and means, cooperating with said second-mentioned means, which becomes operative a definite predetermined interval after the initiation of the current in said circuit for causing the interruption of said current.

30. An apparatus for producing images electro-optically comprising a source of light, an electric circuit for controlling the energization of said light source to control the light emission thereof, means in said circuit the resistance of which abruptly decreases when the voltage impressed thereon is increased to a sufficiently high value, means for impressing a voltage of at least said value upon said device to initiate the flow of current in said circuit, and means, cooperating with said second-mentioned means, which becomes operative a definite predetermined interval after the initiation of the current in said circuit for causing the interruption of said current, the said interval being less than the period of persistence of vision.

31. An apparatus for producing images electro-optically which comprises a source of image current representative of tone value of elemental areas of an object field of which images are to be produced, means for repeatedly establishing a light emission for the elemental areas of the image under control of said current, means for maintaining the emission of light for each elemental area for a period after said current ceases to control the light emission from the elemental area, and means, cooperating with the first-mentioned means, for causing the interruption of the light emission from each elemental area for a period prior to the time that said light emission is again established under control of said image current.

32. The method of producing images electro-optically which comprises amplifying a received electric current representative of tone value of elemental portions of the object field of which images are to be produced, successively establishing a light emission for the elemental portions in turn of elemental strips of the image under control of said amplified current, and maintaining said emission for at least a large part of a succeeding time interval less than that required

to set up a complete image, the period during which said emission takes place being independent of the amplitude of said current controlling said emission.

33. The method of producing images electro-optically which comprises amplifying a received electric current representative of tone value of elemental portions of the object field of which images are to be produced, successively establishing a light emission for the elemental portions in turn of elemental strips of the image under control of said amplified current, and maintaining substantially unaltered said emission for at least a large part of a succeeding time interval less than that required to set up a complete image.

34. An apparatus for producing images electro-optically which comprises a source of image current representative of tone value of elemental areas of an object field of which images are to be produced, means for repeatedly and successively establishing a light emission for the elemental areas of the image under control of said current, and means for maintaining substantially unaltered the emission of light from each elemental area for a period after said current ceases to control the light emission from the elemental area, said period being less than that required to set up a complete image.

35. An apparatus for producing images electro-optically which comprises a source of image current representative of black and white and intermediate tones of the elemental portions of the object field of which images are to be produced, means for successively and repeatedly establishing a light emission for the elemental portions of the image under control of said current and corresponding in intensity to that of the corresponding portions of the object field, and means for maintaining substantially unaltered the emission of light from each elemental portion for a period after said current ceases to control the light emission from said elemental portion.

ERNEST WILDHABER.