April 6, 1965 A. B. MOJONNIER 3,176,879

CONTAINER WITH SPOUT, HANDLE AND A DEPRESSION IN ITS BOTTOM WALL FOR STACKING

Filed April 16, 1962 2 Sheets-Sheet 1

Fig. 1

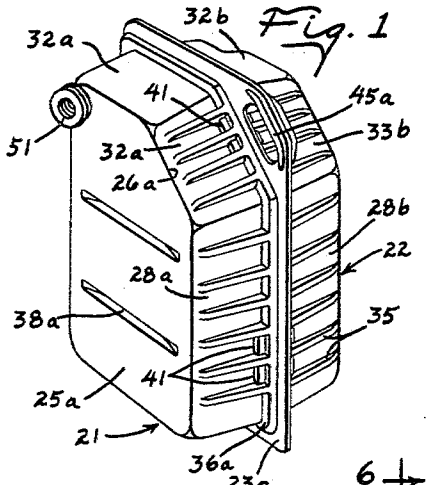

Fig. 2

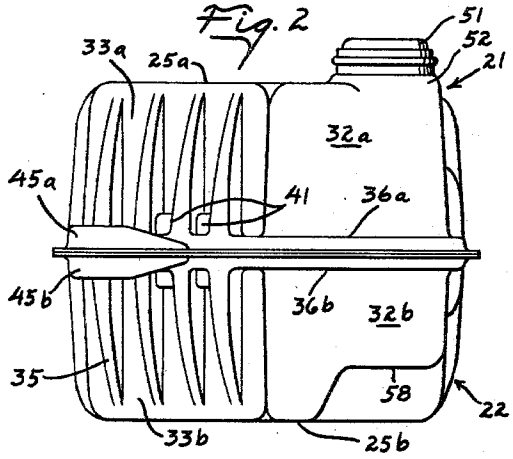

Fig. 3

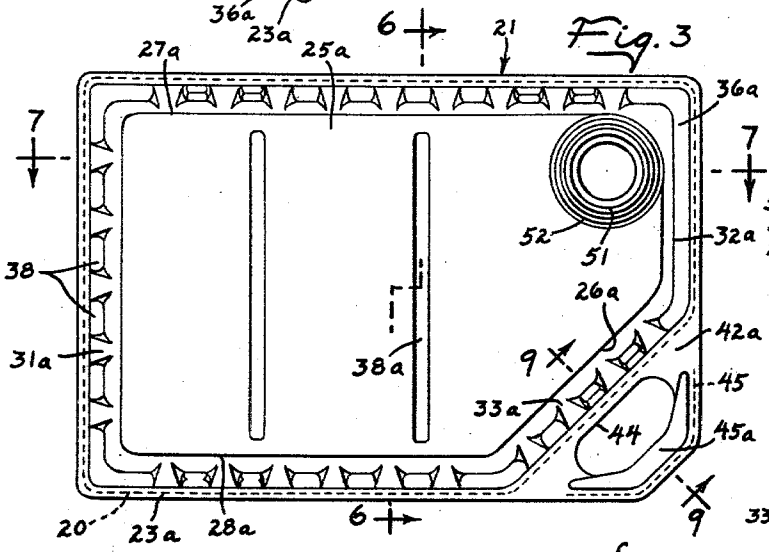

Fig. 10

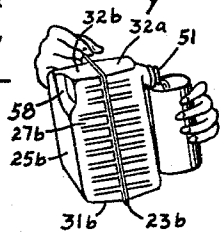

Fig. 11

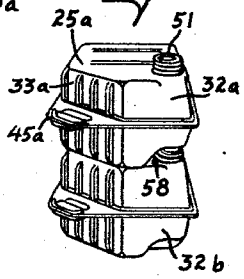

Fig. 4

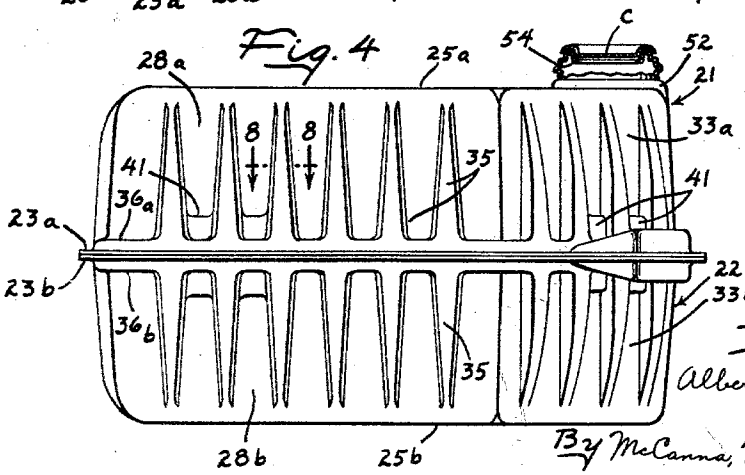

Inventor
Albert B. Mojonnier
By McCanna, Morsbach & Pillote
Atty's

April 6, 1965 A. B. MOJONNIER 3,176,879

CONTAINER WITH SPOUT, HANDLE AND A DEPRESSION IN ITS BOTTOM WALL FOR STACKING

Filed April 16, 1962 2 Sheets-Sheet 2

Fig. 5

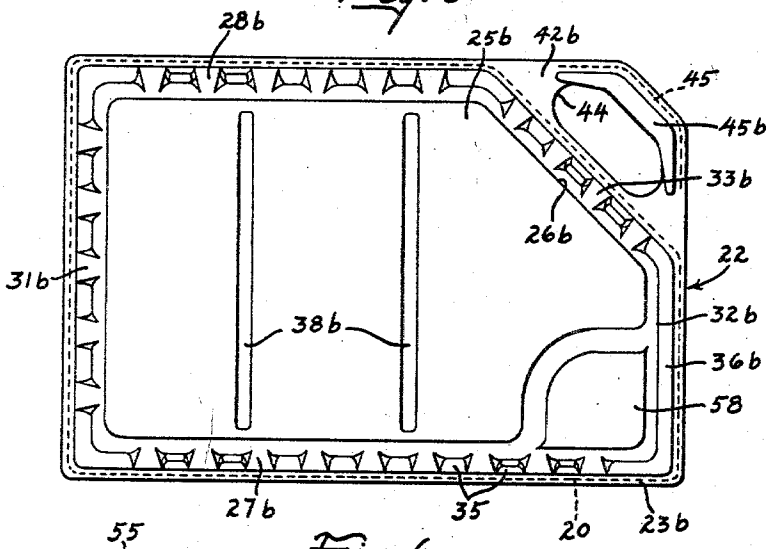

Fig. 8

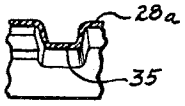

Fig. 6

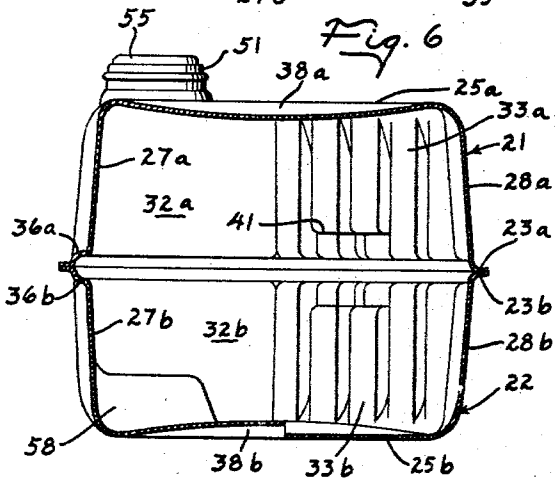

Fig. 12

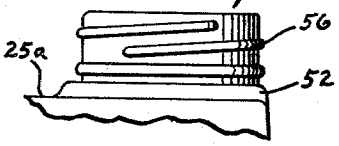

Fig. 9

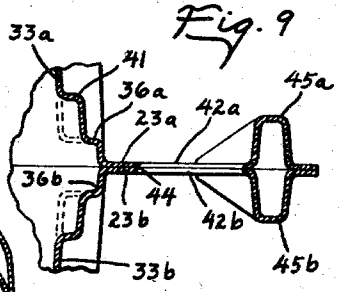

Fig. 7

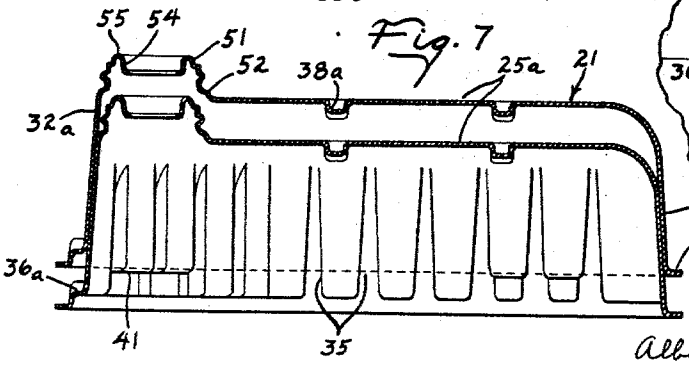

Inventor
Albert B. Mojonnier

By McCanna, Morsbach & Pillote
Atty's

United States Patent Office

3,176,879

Patented Apr. 6, 1965

1

3,176,879

CONTAINER WITH SPOUT, HANDLE AND A DEPRESSION IN ITS BOTTOM WALL FOR STACKING

Albert B. Mojonnier, Chicago, Ill., assignor to Albert Mojonnier, Inc., Chicago, Ill., a corporation of Illinois

Filed Apr. 16, 1962, Ser. No. 187,686
11 Claims. (Cl. 222—143)

This invention relates to improvements in containers and particularly to plastic containers for liquids and the like.

While the container of the present invention is adapted to be made in widely different sizes for handling different quantities of liquid, it has certain features which particularly are adapted for handling relatively large quantities of liquid, of the order of half gallon, gallon or more. In such quantities, the weight of the liquid itself is substantial and the handling of containers thus filled presents special problems, particularly during dispensing of liquid from the container.

It is a general object of this invention to provide a container adapted for holding relatively large quantities of liquid, and which container is itself light in weight to minimize the overall weight of the filled container, and which is yet sufficiently strong and rugged to withstand rough handling when filled.

Another object of this invention is to provide a container for liquids which can be easily carried and which enables manipulation of the container with one hand during dispensing of at least the major portion of the liquid from the container.

A more particular object of this invention is to provide a container for liquids having a pouring spout and integral handle so arranged that at least a major portion of the liquid in the container can be dispensed without lifting the container bodily from the support surface to thereby obviate the necessity of lifting and supporting the entire weight of the filled container during dispensing.

A further object of this invention is to provide a container which can be compactly stored in a confined space and in which the containers can be stacked one upon the other and in side-by-side relation to occupy a minimum of space.

Yet another object of this invention is to provide a container having a pouring spout extending laterally from one wall panel and a spout receiving depression in the opposite wall panel for receiving the pouring spout of a container therebelow when the containers are stacked, and in which the spout and depression are so arranged to enable sliding of the containers into and out of stacked relation to minimize the overhead clearance as required for stacking the containers.

An additional object of this invention is to provide an improved disposable plastic container and integral handle construction so arranged that the stresses which occur during carrying of the container by its handle are distributed around the container.

These, together with other objects and advantages of this invention will be more readily appreciated as the same becomes better understood by reference to the following detailed description when taken in connection with the accompanying drawings wherein:

FIG. 1 is a perspective view of the container;

FIG. 2 is an end elevational view of the container;

FIG. 3 is a plan view of the container;

FIG. 4 is a side elevational view of the container;

FIG. 5 is a bottom view of the container;

FIG. 6 is a transverse sectional view taken on the broken section line 6—6 of FIG. 3;

FIG. 7 is a longitudinal sectional view through the

2

upper container section taken on the plane 7—7 of FIG. 3 and illustrating the manner in which the container sections nest prior to assembly;

FIG. 8 is an enlarged fragmentary sectional view through one of the ribs, taken on the plane 8—8 of FIG. 4;

FIG. 9 is a fragmentary sectional view taken on the plane 9—9 of FIG. 3 and illustrating the handle construction;

FIG. 10 is a perspective view illustrating dispensing of liquid from the container;

FIG. 11 is a perspective view illustrating stacking of the containers; and

FIG. 12 is a fragmentary side elevational view illustrating a modified form of spout.

The container of the present invention is formed with a generally rectangular configuration and is advantageously formed in two separate sections which are joined together to form an enclosure. The container sections are preferably in the form of two substantially equal cup-shaped halves designated 21 and 22 having mating outturned flanges 23*a* and 23*b* which are joined together as by a heat seal along a line indicated at 20 in FIGS. 3 and 5. The container may be formed of various different plastic materials such as polystyrene, polyethylene, acrylics, acetates, vinyls, polyvinylchloride, nylon, polyester base resin, etc. For uses such as food packaging of milk, and the like, impact polystyrene, a copolymer, constitutes a presently preferred material. The halves or sections of the containers may be molded or shaped in any suitable manner, but are preferably formed of sheet material in a fluid pressure forming process wherein fluid pressure is used to press the sheet material into conformity with the shape of a mold. Either vacuum or air at greater than atmospheric pressure may be used to press the sheet into engagement with the mold, and the mold may be of either the male or female type. In practice, it has been found preferable to use the so-called plug-assist type method in which the plastic sheet is heated; placed over a female mold; a plug pushed against the sheet to draw material from the sides into the bottom of the mold; and a vacuum thereafter applied to draw the sheet away from the plug and into conformity with the mold. This method enables control over the amount of thinning of the sheet at the bottom of the mold and, by proper design of the plug, the sheet can be drawn to produce relatively thin side walls and relatively heavier face panels so proportioned as to produce substantially uniform strength in the carton.

The container half sections 21 and 22 have face panels respectively designated 25*a* and 25*b* which form the top and bottom or base of the container during storage of the same. The top and bottom panels are advantageously formed with a generally rectangular configuration to enable compact storage of the containers and, for reasons set forth hereinafter, one corner of each the top and bottom panels is truncated as indicated at 26*a* and 26*b*. The upper container half also includes side panels 27*a* and 28*a*, end panels 31*a* and 32*a*, and a diagonally extending panel 33*a* which extends across the truncated corner 26*a* between the side panel 28*a* and the end panel 32*a*. The lower container half similarly includes side panels 27*b* and 28*b*, and end panels 31*b* and 32*b*, and a diagonally extending panel 33*b* extending across the truncated corner 26*b* of the lower panel.

It is essential to the economic manufacture of the containers that the container half-sections be formed from the minimum thickness sheet stock, and that the thickness of the various wall panels and parts thereof be controlled during the forming and shaping of the half sections to achieve the proper wall thickness necessary

to give substantially uniform strength throughout the carton. In practice, it has been found that the thickness of the sides and end wall panels can be made substantially less than the face panels without causing failure of the side and end panels during handling. The peripheral mating flanges **23***a* and **23***b* on the half sections markedly aid in rigidifying the wall panels. However, it has been found advantageous to use stiffening ribs on at least the larger side and end panels to prevent buckling of the side and end panels when high localized stress is applied thereto. In the particular container shown, each of the side and end panels except the relatively small end panels **32***a* and **32***b* are provided with stiffening ribs designated **35**. The ribs advantageously extend in a direction generally transverse to the mating flanges **23***a* and **23***b* and, preferably, taper in width and depth in a direction away from the flanges. In accordance with the present invention, a stress distributing off-set or channel designated **36***a* and **36***b* is provided on the container half sections **21** and **22** respectively to join the flanges **23***a* and **23***b* to the respective side and end panels. As best shown in FIG. 6, the offset portions **36***a* and **36***b* have generally L-shaped cross section and extend outwardly from their respective side and end panels and define a peripherally extending channel at the juncture with the mating flanges **23***a* and **23***b*. The base ends of the ribs **35** merge with the respective offset portion **36***a* and **36***b* so that stresses applied to the ribs are distributed along the out-turned flanges **23***a* and **23***b* and are not transmitted directly thereto in the form of high localized stresses which would tend to rupture the flange. This offset portion also functions to further stiffen and rigidify the conainer along a band medially between the face panels **25***a* and **25***b* and markedly enhances the strength of the container against laterally applied stresses. The face panels are also preferably formed with rigidifying ribs and, as shown, each of the face panels are provided with crosswise extending reinforcing ribs **38***a* and **38***b*. The ribs **38***a* and **38***b* in the face panels are advantageously shaped to extend inwardly of the plane of the panels so as to not interfere with stacking of the containers on each other, and, as best shown in FIG. 6, the cross ribs **38***a* and **38***b* are relatively deeper adjacent the mid portion of the ribs and progressively decrease in depth toward the opposed side panels of the container half sections. The side and end panels of the container half sections are advantageously formed to taper inwardly in a direction away from the respective flanges **23***a* and **23***b*, to enable nesting of the container half sections prior to assembly of the containers and, as previously noted, the stiffening ribs **35** on the side and end walls of the container half sections are also tapered in width and depth in a direction away from the mating flanges **23***a* and **23***b* to enable the aforedescribed nesting of the half sections prior to assembly. As best shown in FIG. 8, the ribs have a generally wedge shaped cross section. Denesting stops **41** are conveniently provided on the side walls at spaced points therearound to control nesting of the container half sections. The stops are preferably located adjacent the offset portions **36***a* and **36***b* on the half sections and are conveniently located between adjacent ribs. As shown, the denesting stops are arranged in pairs. However, if two or more different molds are used in forming like halves, it is preferable to arrange the denesting stop in the different molds in relatively different locations so that, when container half-sections from the several molds are stacked together, the denesting stops are staggered.

A handle is formed integrally with the container for carrying the container and to facilitate handling of the container during dispensing. In accordance with the present invention, the handle is formed integrally with the mating flanges **23***a* and **23***b* of the half sections at the diagonally extending panels **33***a* and **33***b*. As best shown in FIG. 9, the handle includes generally flat web portions

42*a* and **42***b* disposed coplanar with the mating flanges **23** *a* and **23***b* respectively. A finger receiving opening **44** is formed in the web portions **42***a* and **42***b*, and the web portions are heat sealed or otherwise bonded together along a line designated **45** (see FIGS. 3 and 5) adjacent the outer periphery of the handle. The web portions **42***a* and **42***b* are also preferably laterally enlarged as indicated at **45***a* and **45***b* along the outer periphery of the finger receiving opening **44** and inwardly of the seal **45** to provide a comfortable hand grip. These laterally enlarged portions also stiffen the outer portion of the hand grip and, advantageously, the heat seal or bond **45** along the outer periphery of the hand grip is arranged to terminate in spaced relation to the heat seal **20** for the mating flanges to provide a relatively flexible section between the outer portion of the hand grip and the flanges **23***a* and **23***b*. As is shown in FIGS. 3 and 5, the hand grip projects into the truncated corner of the container and is disposed within the generally rectangular outline of the container to enable compact packing of the containers in side-by-side or end-to-end relation. The hand grip is thus disposed in a plane substantially medially between the face panels **25***a* and **25***b* of the container and in the plane of the mating flanges **23***a* and **23***b* of the container valves. Since the hand grip is formed integrally with the mating flanges, the load applied to the hand grip during carrying is effectively distributed by the mating flanges around the periphery of the container so that high localized stresses on the container are thereby avoided. The offset portions **36***a* and **36***b* on the container half sections also serves to aid in distributing the stress from the handle uniformly around the container.

While the container of the present invention can be manufactured in various different sizes to receive different quantities of liquid, it is particularly for use in packaging relatively large quantities of liquid, for example, half-gallon, gallon and even larger sizes. In containers with such capacity the weight of the liquid itself becomes a substantial factor and particular problems are presented in manipulating the container during dispensing of liquid. In accordance with the present invention, a pouring spout is formed integrally with the container and is so arranged as to enable dispensing of at least a major portion of the liquid from the container, without requiring the container to be bodily lifted and supported during dispensing. With the present arrangement, liquid can be dispensed from the container substantially entirely with one hand and without requiring exertion of substantial effort. In particular, a pouring spout **51** is formed integrally with the top face panel **25***a* to extend laterally of the face panel in a direction substantially normal to the plane through the handle. The spout **51** is located at the end of the container adjacent the handle and is advantageously positioned in the corner of the upper face panel opposite the truncated corner **26***a*. As best shown in FIG. 7, the spout **51** is conveniently formed with an enlarged base portion **52** at its juncture with the top panel **25***a*, to stiffen and rigidify the same. In the form shown in FIGS. 1–11, the spout is formed with a re-entrant portion **54** forming a socket to receive the mouth spanning portion of a milk bottle cap C, and the lip of the spout is preferably rounded to form a seal with the channel-shaped rim of the cap. Alternatively, the spout can be formed with an externally threaded end **56** as shown in FIG. 12 for receiving a threaded cap.

In order to enable stacking of the containers on top of each other for compact storage, the bottom panel **25***b* of each container is formed with a depression **58** for receiving the spout of the container therebelow. The depression is formed in the corner of the bottom wall which registers with the spout **51** and, advantageously, the depression is arranged as to open at the end wall **32***b* and the side wall **27***b* so that the container can slide into and out of stacked relation to thereby minimize the overhead clearance required for stacking the containers. This is of particular importance in milk containers and the like

wherein it is necessary to stack the containers in confined compartments in a refrigerator.

From the foregoing, it will be seen that the containers can be stacked one upon the other with the spout of one container extending into the depression of the container thereabove. Since the depression in the bottom panel of the container is open at the side and end of the container, the containers can slide into and out of stacked relation. Further, since the containers have a generally rectangular configuration and the handle is disposed within the rectangular outline, the containers can be completely positioned in close side-by-side and end-to-end relation.

The generally flat top and bottom panels 25*a* and 25*b* form the major sides of the container and are spaced apart a distance substantially less than the length of the container and preferably less than the width of the container so as to provide a low stable package when the containers rest on their bottom panel. During dispensing, it is only necessary to remove the cap from the container and then pivot the container up onto the end panel 31*b* as shown in FIG. 10. Since the spout extends laterally from the top wall of the container, liquid can be poured from the container while the end panel rests on the supporting surface, as shown in FIG. 10. As is apparent, the rate at which liquid is dispensed from the container can be accurately controlled by merely tilting the container on the end panel and, when in this position, the mating flanges 23*a* and 23*b* on the end panel form a fulcrum to facilitate tilting of the container. The major portion of the liquid in the container can be dispensed therefrom while the container end panels 31*a* and 31*b* rest on the supporting surface. Moreover, it is only necessary to use one hand to manipulate the container and to tilt it to an upright position and then to control dispensing of liquid from the container. As more and more liquid is dispensed from the container, it is obviously necessary to tilt the front panel downwardly at a progressively increasing angle in order to dispense additional liquid. After the major portion of the liquid has been dispensed from the container, a point is reached wherein it is necessary to lift the container to dispense additional liquid into a glass resting on the support surface. However, at this time, the weight of the remaining liquid is small as compared to the overall weight of the filled container, and the container can be easily lifted with one hand. Since the spout is located in the corner of the front panel adjacent the side opposite the side to which the handle is attached, the container can still be manipulated with one hand to dispense the remaining liquid from the container.

I claim:

1. A plastic container for liquids having a generally rectangular overall configuration comprising, top and bottom face panels and a plurality of generally rectangular side panels extending between the face panels and defining a closed liquid receiving vessel, said top and bottom panels defining the major sides of the container and being spaced apart a distance substantially less than the length of the face panels to provide a low flat vessel when the container is stored on the bottom face panel, said container having a pouring spout formed on said top panel adjacent one corner thereof and extending perpendicular to said top panel, and said bottom panel having a depression formed in the registering corner thereof for receiving the spout of a container therebelow, said depression in said bottom panel opening at the side and end of the container to enable sliding of the containers into and out of stacked position.

2. A plastic container for liquids having a generally rectangular overall configuration comprising, top and bottom face panels and a plurality of generally rectangular side panels extending between the face panels and defining a closed liquid receiving vessel, said bottom face panel being disposed generally parallel to said top panel for supporting the container during storage, an integral pouring spout on one corner of said top face panel of said

container extending transverse to said top face panel, and a handle formed integrally with said container at a corner adjacent said one corner and disposed in a plane paralleling said face panels and substantially medially therebetween for carrying the container and for tilting the container laterally to dispense liquid through the pouring spout.

3. The combination of claim 2 wherein said bottom panel has a depression for receiving the pouring spout of a subjacent container to enable stacking of containers with face panels of adjacent containers in abutting relation, said depression opening at the side of the container to enable sliding of the containers into and out of stacked position.

4. A plastic container comprising, two cup-shaped halves having mating out-turned flanges joined together to define a closed liquid receiving vessel, said container halves each having a face panel generally paralleling said out-turned flanges and spaced side and end panels arranged in a generally rectangular pattern, said container halves also including a diagonal panel extending across one corner of the rectangular pattern defined by the side and end panels, a handle integral with said mating flanges and extending outwardly from said diagonal panel in the plane of said flanges, said handle being disposed substantially within the rectangular pattern defined by said side and end panels for compact storage of the containers, and a pouring spout formed on said container.

5. A plastic container comprising, two cup-shaped halves having mating peripheral edges joined together along a seam line to define a closed liquid receiving vessel, said container halves each having a face panel generally paralleling the plane of said seam line and spaced side and end panels arranged in a generally rectangular pattern, said container halves also including a diagonal panel extending across one corner of the rectangular pattern defined by the side and end panels, a handle integral with said container and extending outwardly from said diagonal panel in the plane of said seam line, said handle being disposed substantially within the rectangular pattern defined by said side and end panels for compact storage of the containers, and an integral pouring spout on a second corner of said container adjacent to said one corner and extending substantially perpendicular to said top panel.

6. A plastic container for liquids comprising, two cup-shaped halves having mating out-turned flanges joined together to define a liquid receiving vessel, said container halves each including a face panel having a generally rectangular outline with one corner truncated, said container halves also including generally rectangular side panels extending along each edge of the face panel to the respective flange, a handle integral with the mating flanges at said one corner of the container and disposed within the generally rectangular outline of the face panels to enable compact packing of adjacent containers, said face panels defining the major sides of the container and having a length greater than the width thereof and being spaced apart a distance substantially less than the length of the face panels to provide a low flat package when the container is stored on one of the face panels, said container having an integral pouring spout extending laterally from a corner of one face panel adjacent said truncated corner, said spout extending transverse to a plane through said flanges and handle whereby to enable pouring of liquid from the container by tipping the container about one end of the same.

7. A plastic container for liquids comprising, two cup-shaped halves having mating peripheral edges joined together along a seam line to define a liquid receiving vessel, said container halves each including a face panel having a generally rectangular outline with one corner truncated, said container halves also including generally rectangular side panels extending along each edge of the face panel to the seam line, a handle integral with the

container at said one corner of the container and disposed substantially within the generally rectangular outline of the face panels to enable compact packing of adjacent containers, said face panels defining the major sides of the container and having a length greater than the width thereof and being spaced apart a distance substantially less than the length of the face panels to provide a low flat package when the container is stored on one of the face panels, said container having an integral pouring spout extending laterally from a corner of one face panel adjacent said truncated corner, said spout extending transverse to a plane through said seam line whereby to enable pouring of liquid from the container by tipping the container about one end of the same, said container having a depression in the other of said panels at a point aligned with the spout on said one panel for receiving the spout on a container positioned therebelow, said depression opening at the side and ends of the container to enable sliding of the containers into and out of stacked relation.

8. A plastic container for liquids comprising, two cup-shaped halves having mating out-turned flanges joined together to define a liquid receiving vessel, said container halves each including a face panel having a generally rectangular outline with one corner truncated, said container halves also including generally rectangular side panels extending along each edge of the face panel and having a marginal outwardly offset portion joining the side panels to the respective flange, said side panels having ribs formed therein transverse to said flanges and merging with said marginal offset portion, a handle integral with said mating flanges at said one corner of the container and disposed substantially within the rectangular outline of the generally rectangular face panels to enable compact packing of adjacent containers, and a pouring spout formed integrally with said container.

9. A plastic container comprising, two cup-like halves each having mating peripheral edges joined together along a seam line to define a liquid receiving vessel, said cup-like halves each having side walls disposed transverse to a plane through said seam line, said side walls having a rim portion along at least a major portion of said seam line, which rim portion is laterally offset from the side walls and is joined to the respective side wall by a transverse shoulder portion spaced from the plane of said seam line, said side walls having ribs formed therein extending along the side walls in a direction transverse to the plane through said seam line and merging with said rim portion on the respective cup-like half whereby the rim portion distributes stresses applied to the ribs on the side walls along the seam line.

10. A plastic container comprising, two cup-like halves each having mating peripheral edges joined together along a seam line to define a liquid receiving vessel, said cup-like halves each having side walls disposed transverse to a plane through said seam line, said side walls having a rim portion along at least a major portion of said seam line, which rim portion is laterally offset outwardly from the side walls and is joined to the respective side wall by a transverse shoulder portion spaced from the plane of said seam line, said side walls having hollow ribs of generally U-shaped cross section formed therein and extending along the side walls in a direction transverse to the plane of said seam line, said ribs having the web portion thereof merging with said rim portion on the respective cup-like half and said hollow ribs decreasing in width and depth in a direction away from said rim portion to enable nesting of container halves prior to assembly.

11. A plastic container having a generally rectangular configuration comprising, two cup-shaped halves having mating out-turned flanges joined together to define a closed liquid receiving vessel, said container halves each having a face panel generally paralleling said out-turned flanges and spaced side and end panels extending transverse to the face panels and arranged in a generally rectangular pattern, said container halves also including a diagonal panel extending across one corner of the rectangular pattern defined by the side and end panels, a handle integral with said mating flanges and extending outwardly from said diagonal panel in the plane of said flanges, said handle being disposed substantially within the generally rectangular pattern defined by said side and end panels for compact storage of the containers, said handle including two sections each integral with respective ones of said flanges and bonded together at a point spaced from the flanges, said sections having a finger receiving opening extending therethrough and having flat portions located adjacent the flanges which are in substantially abutting relation but not bonded together to provide a flexible portion on the handle.

References Cited by the Examiner

UNITED STATES PATENTS

782,087	2/05	Waggoner	220—97
1,855,813	4/32	Zampari.	
2,560,761	7/51	Ferguson	222—143 X
2,692,709	10/54	Testa	222—566
2,786,597	3/57	Benson	220—97 X
2,913,121	11/59	Randolph.	
2,950,029	8/60	Winstead	222—143
3,039,656	6/62	Wentz	222—173

FOREIGN PATENTS

1,005,895	4/57	Germany.
1,239,737	7/60	France.
887,893	1/62	Great Britain.

RAPHAEL M. LUPO, *Primary Examiner.*

LOUIS J. DEMBO, *Examiner.*