July 10, 1956 H. B. SHAPER 2,754,373

MINIATURE HEARING-AID RECEIVER

Filed Aug. 22, 1952

Fig. 1.

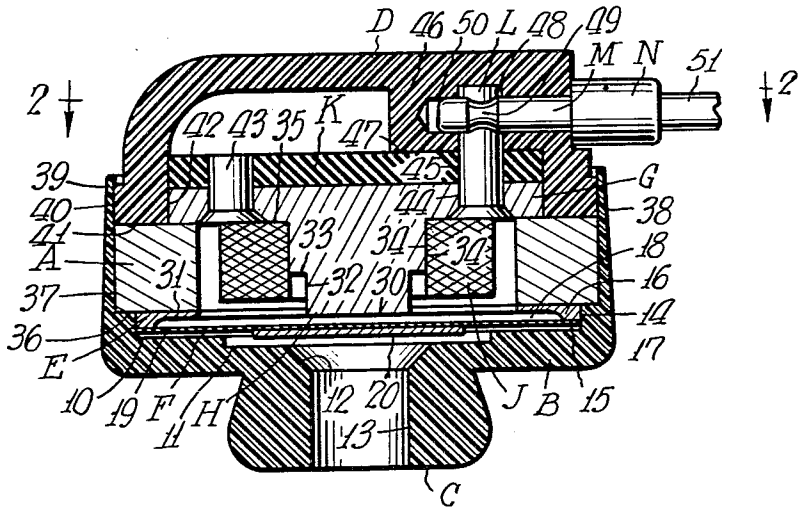

Fig. 2.

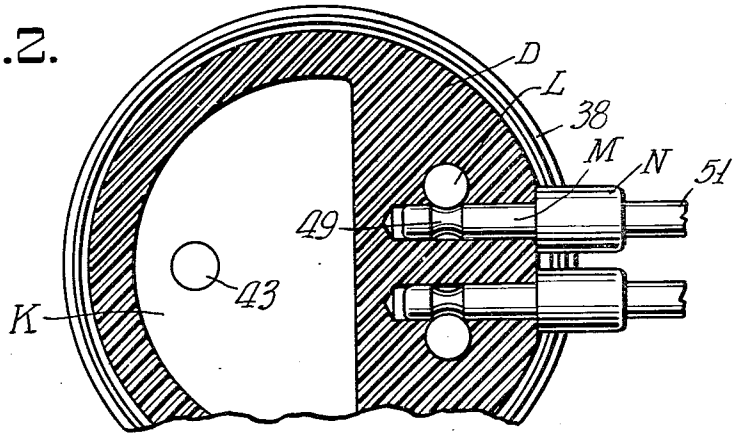

Fig. 3.

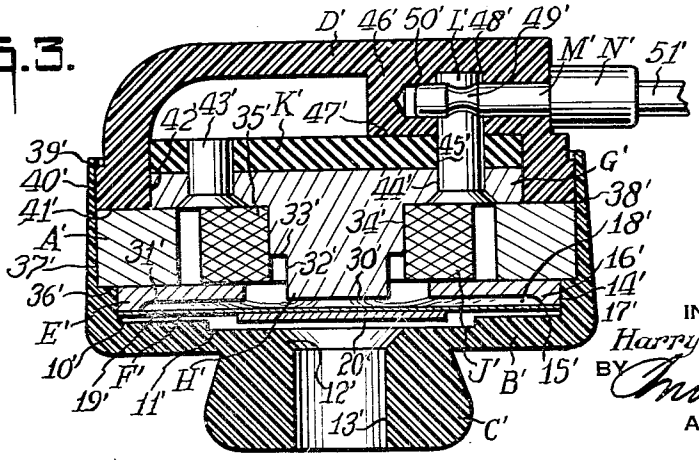

INVENTOR
Harry B. Shaper
BY Amy Price
ATTORNEY

United States Patent Office

2,754,373

Patented July 10, 1956

2,754,373

MINIATURE HEARING-AID RECEIVER

Harry B. Shaper, New York, N. Y.

Application August 22, 1952, Serial No. 305,781

7 Claims. (Cl. 179—114)

The present invention relates to a miniature hearing-aid receiver, and it particularly relates to an extremely small sized receiver which may be effectively concealed in and around the ear cavity.

It is among the objects of the present invention to provide a miniature hearing-aid assembly which may be mounted in or adjacent to the ear cavity and which will be extremely small in size without any diminution in the transmission of sound.

Another object is to provide a hearing-aid miniature receiver of a size less than one half inch diameter with full capacity and maximum sound emission efficiency in which there is a minimum volume and weight and a maximum amount of generation of sound.

A further object is to provide a compact, highly efficient miniature receiver which is so arranged as to permit maximum efficiency with very small size diaphragm chambers and most effective application of magnetic forces.

In accomplishing the above objects it has been found most successful according to one embodiment of the present invention to provide a circular flat hearing-aid assembly the maximum diameter and depth or thickness of which shall not substantially exceed one half inch.

Desirably, an annular magnet receives an annular winding which is mounted upon and carried around a central pole piece. The annnlar magnet carries a permeable collector plate on one side upon which the diaphragm is mounted. The edge of the collector plate preferably is ridged so as to form a clearance or separation between the central pole piece between the center of the diaphragm and allow sufficient space to give free vibration to the diaphragm.

The annular magnet with the collector plate on one side and a pole piece carrier plate and insulating plate on the other side form a sub-assembly which may be telescoped between two small cups forming the outer casing.

One of the cups may be of aluminum with a tubular or centrally bored ear projection stopple. The other casing cup may be of a molded resin such as molded Bakelite or phenyl formaldehyde resin.

Desirably, the insulating plate will carry suitable contacts in close parallelism to each other which may be positioned to establish an electrical circuit with two prong plug pins which are inserted through the sides of the housing.

The shaping of the center pole piece and the close positioning of the collector plate to the pole piece permit magnetic forces to be applied to the smallest center circle possible with successful flux to give maximum efficiency even with a small diaphragm less than one half inch.

With the foregoing and other objects in view, the invention consists of the novel construction, combination and arrangement of parts as hereinafter more specifically described, and illustrated in the accompanying drawings, wherein is shown an embodiment of the invention, but it is to be understood that changes, variations and modifications can be resorted to which fall within the scope of the claims hereunto appended.

In the drawings wherein like reference characters denote corresponding parts throughout the several views:

Fig. 1 is a radial transverse sectional view of a hearing-aid miniature receiver, according to the present invention, showing the plug or pins in position establishing contact.

Fig. 2 is a transverse sectional view upon the line 2—2 of Fig. 1, showing the manner of insertion of the plug pins.

Fig. 3 is a transverse sectional view of an alternative embodiment similar to Fig. 1.

Referring to Figs. 1 and 2 there is shown an annular magnet A which forms the main structural element, which acts as a carrier for and to receive the inside cup B having the ear engaging member C and the outside cup D.

The annular magnet A may be of an aluminum nickel cobalt alloy or some other highly magnetic alloy whereas the inside cup B is preferably of aluminum while the outside cup D is of Bakelite or some other molded synthetic plastic material.

Mounted on one side of the annular magnet A is the collector plate E which in turn carries the diaphragm F. On the other side of the annular magnet A is mounted the plate G carrying the stepped pole piece H. Between the stepped pole piece H and the magnet A is the annular coil or winding J.

The plate G carries the insulating plate or disc K through which project the plug pins L. The plug pins L are designed to establish a circuit with the plug pins M of the plug N. As shown in Fig. 1 the device is about six to eight times its actual size and the diameter and thickness do not exceed one half inch.

Specifically, the aluminum cup B has a shallow recess 10 and a deeper recess 11 which form one side of the diaphragm chamber. The deeper recess 10 communicates with the conical chamber 12 which opens into the main passageway 13 in the nipple C. The sound will pass from the vibrating diaphragm F through the passageway 13 into the ear cavity.

The side walls 14 of the shallow recess 10 receive the edges 15 of the diaphragm as well as the edges 16 of the collector plate E. The elevated ridge at 17 on the periphery of the collector plate E will leave a shallow space 18 on the other side of the diaphragm F giving sufficient freedom to the diaphragm F to vibrate and generate sound waves.

The diaphragm F has the thin metal disc 19 with a central button or enlargement 20 through which the main flux passes as indicated at 21, 22 and 23 in Fig. 3.

The central pole piece projects as indicated at 30 to be flush with the base 31 of the shallow recess 18 inside of the diaphragm F. The pole piece is recessed as indicated at 32 and has a step 33 which is encircled by the inside face 34 of the coil J. The coil J fits closely around the base of the pole piece H and against the face 35 of the plate G.

The annular magnet A rests upon the shoulder 36 on the interior of the cup B, and it closely fits against the interior face 37 of the telescoped tubular extension 38 of the cup or shell B.

The outer edges 39 of the telescoping shell 38 fit around the enlarged portion 40 of the cup D. The face 41 of the cup D abuts the annular magnet to limit its telescoping inside the tubular member 38.

The periphery of the base plate G of the pole piece H closely fits within the interior opening 42 of the outside cup D. The base plate G carries the insulating plate H by the rivet or pin 43. At the opposite side to the pin 43 are two plug pins L, which as shown in Fig.

1 project through the plate G at 44 and through the insulating plate K at 45.

The interior of the cup has an enlargement 46, the bottom face 47 of which abuts the plate K. This enlargement has two recesses 48 to receive the ends 49 of the plug pins L.

The enlargement 46 also has two lateral openings 50 to receive the plug pins M attached to the external plug N with the external wiring 51.

As shown best in Fig. 2 these pins M are notched at 52 to snap around the sides of the plug pins L and make the permanent connection.

The construction as shown gives full capacity to the diaphragm F and provides sufficient chamber space at 18 on one side, and at 10 and 11 on the other side, to permit full and free vibration of the diaphragm F. At the same time, the reduced diameter portion 32 of the pole piece shall permit an outflowing of flux as indicated at 21, 22 and 23 into the collector plate C, giving maximum efficiency in respect to vibration of the diaphragm F.

It will be noted that the annular magnet is actually the body of the receiver and everything is mounted upon the annular magnet A which may be smaller than one half inch in diameter and less than three eighths of an inch thick.

On one side of the magnet A are mounted the collector plate and the diaphragm while on the other side is mounted the terminals and the base plate for the pole piece.

The applicant has thus provided a miniature hearing-aid receiver of a size less than one-half inch in diameter and thickness entirely mounted upon an annular magnet A constituting and forming the main structure.

This annular magnet carries the permeable collector ring E which supports the edge of the diaphragm at one side.

The base plate G of the pole piece H on the other side carries the connector pins which form the main contacts for the connecting plugs.

The stepped shape of the pole piece H assures most effective utilization of the flux 21–22–23.

While there has been herein described a preferred form of the invention, it should be understood that the same may be altered in details and in relative arrangement of parts within the scope of the appended claims.

The embodiment of Fig. 3 is substantially identical with the embodiment of Figs. 1 and 2 and similarly functioning parts being indicated by the same numerals primed. The essential difference is that the collector plate E' has been so extended at its inner end to abut upon and support the inner periphery of the coil J.

Having now particularly described and ascertained the nature of the invention, and in what manner the same is to be performed, what is claimed is:

1. A hearing-aid miniature receiver having an external casing formed of telescoping cups and an internal structural member formed of an annular magnet, said cups being telescoped about and abutting on said magnet and said magnet carrying a collector ring and a diaphragm at one side and a pole plate and contacts at the other side and said pole plate having a central pole piece projecting centrally into and through the space inside of said magnet and a coil encircling said pole piece inside of said magnet with connections to said contacts, the interior adjacent parts of said cups, annular magnet, collector ring, diaphragm, pole plate and coil being so closely spaced as to provide minimum interior air spaces and said collector ring, diaphragm and magnet being mounted directly in the interior of one of said cups and said pole plate being mounted in the interior of the other cup, the outside edge of the inside telescoping cup abutting directly against the outer periphery of said annular magnet and the outer periphery of said pole plate abutting the inner periphery of said annular magnet.

2. A hearing-aid miniature receiver having an external casing formed of telescoping cups and an internal structural member formed of an annular magnet, said cups being telescoped about and abutting on said magnet and said magnet carrying a collector ring and a diaphragm at one side and a pole plate and contacts at the other side and said pole plate having a central pole piece projecting centrally into and through the space inside of said magnet and a coil encircling said pole piece inside of said magnet with connections to said contacts, said inside cup being of aluminum and having a tubular projection to be inserted within the ear and the outside cup being formed of a molded plastic, the interior adjacent parts of said cups, annular magnet, collector ring, diaphragm, pole plate and coil being so closely spaced as to provide minimum interior air spaces and said collector ring, diaphragm and magnet being mounted directly in the interior of one of said cups and said pole plate being mounted in the interior of the other cup, the outside edge of the inside telescoping cup abutting directly against the outer periphery of said annular magnet and the outer periphery of said pole plate abutting the inner periphery of said annular magnet.

3. A hearing-aid miniature receiver having an external casing formed of telescoping cups and an internal structural member formed of an annular magnet, said cups being telescoped about and abutting on said magnet and said magnet carrying a collector ring and a diaphragm at one side and a pole plate and contacts at the other side and said pole plate having a central pole piece projecting centrally into and through the space inside of said magnet and a coil encircling said pole piece inside of said magnet with connections to said contacts, said pole piece being stepped so as to be of smallest diameter toward the interior cup, and said diaphragm being of enhanced thickness at its central portion closest the reduced stepped portion of said pole piece, the interior adjacent parts of said cups, annular magnet, collector ring, diaphragm, pole plate and coil being so closely spaced as to provide minimum interior air spaces and said collector ring, diaphragm and magnet being mounted directly in the interior of one of said cups and said pole plate being mounted in the interior of the other cup, the outside edge of the inside telescoping cup abutting directly against the outer periphery of said annular magnet and the outer periphery of said pole plate abutting the inner periphery of said annular magnet.

4. A hearing-aid miniature receiver having an external casing formed of telescoping cups and an internal structural member former of an annular magnet, said cups being telescoped about and abutting on said magnet and said magnet carrying a collector ring and a diaphragm at one side and a pole plate and contacts at the other side and said pole plate having a central pole piece projecting centrally into and through the space inside of said magnet and a coil encircling said pole piece inside of said magnet with connections to said contacts, said collector ring collecting flux flowing through the diaphragm and the central stepped portion of the pole piece and having a peripheral ridge supporting the periphery of the diaphragm, the interior adjacent parts of said cups, annular magnet, collector ring, diaphragm, pole plate and coil being so closely spaced as to provide minimum interior air spaces and said collector ring, diaphragm and magnet being mounted directly in the interior of one of said cups and said pole plate being mounted in the interior of the other cup, the outside edge of the inside telescoping cup abutting directly against the outer periphery of said annular magnet and the outer periphery of said pole plate abutting the inner periphery of said annular magnet.

5. A hearing-aid miniature receiver having an external casing formed of telescoping cups and an internal structural member formed of an annular magnet, said cups being telescoped about and abutting on said magnet

and said magnet carrying a collector ring and a diaphragm at one side and a pole plate and contacts at the other side and said pole plate having a central pole piece projecting centrally into and through the space inside of said magnet and a coil encircling said pole piece inside of said magnet with connections to said contacts, said pole plate having an insulating backing and said contacts consisting of pins projecting through said insulating backing into the outer cup, the outside edge of the inside telescoping cup abutting directly against the outer periphery of said annular magnet and the outer periphery of said pole plate abutting the inner periphery of said annular magnet.

6. A miniature hearing-aid receiver having an aluminum cup with a shallow recess at the bottom of the cup forming a diaphragm chamber and an ear engaging member projecting from the base of said cup, said member having an axial opening extending through said member into said shallow recess, said cup also having an intermediate recess above said shallow recess, a circular metal diaphragm positioned in said intermediate recess, an annular collector also positioned in said intermediate recess above and contacting the periphery of said diaphragm, said cup also having a deep wider recess extending from the edge of the cup to the intermediate recess, an annular magnet positioned in the bottom of said deep recess and a molded plastic cup positioned on the top of said deep recess and contacting the periphery of said annular magnet, said plastic cup having a deep wide recess adjacent the outer edge of the plastic cup, an insulating plate positioned on the inner portion of the plastic cup recess, and a pole plate positioned on the outer portion of the plastic cup recess and having a projection extending within the annular magnet to a position closely adjacent the diaphragm and a core fitted around said projection and occupying the space between the projection and the magnet.

7. The receiver of claim 6, said plastic cup also receiving a transverse connection which extends through openings in the side of the plastic cup.

References Cited in the file of this patent

UNITED STATES PATENTS

2,029,282	Serge	Jan. 28, 1936
2,078,385	Kato	Apr. 27, 1937
2,390,243	Faltico	Dec. 4, 1945
2,506,609	Mott	May 9, 1950
2,610,259	Roberton	Sept. 9, 1952