(No Model.)

S. BARTLETT.

WASHING MACHINE.

No. 426,755. Patented Apr. 29, 1890.

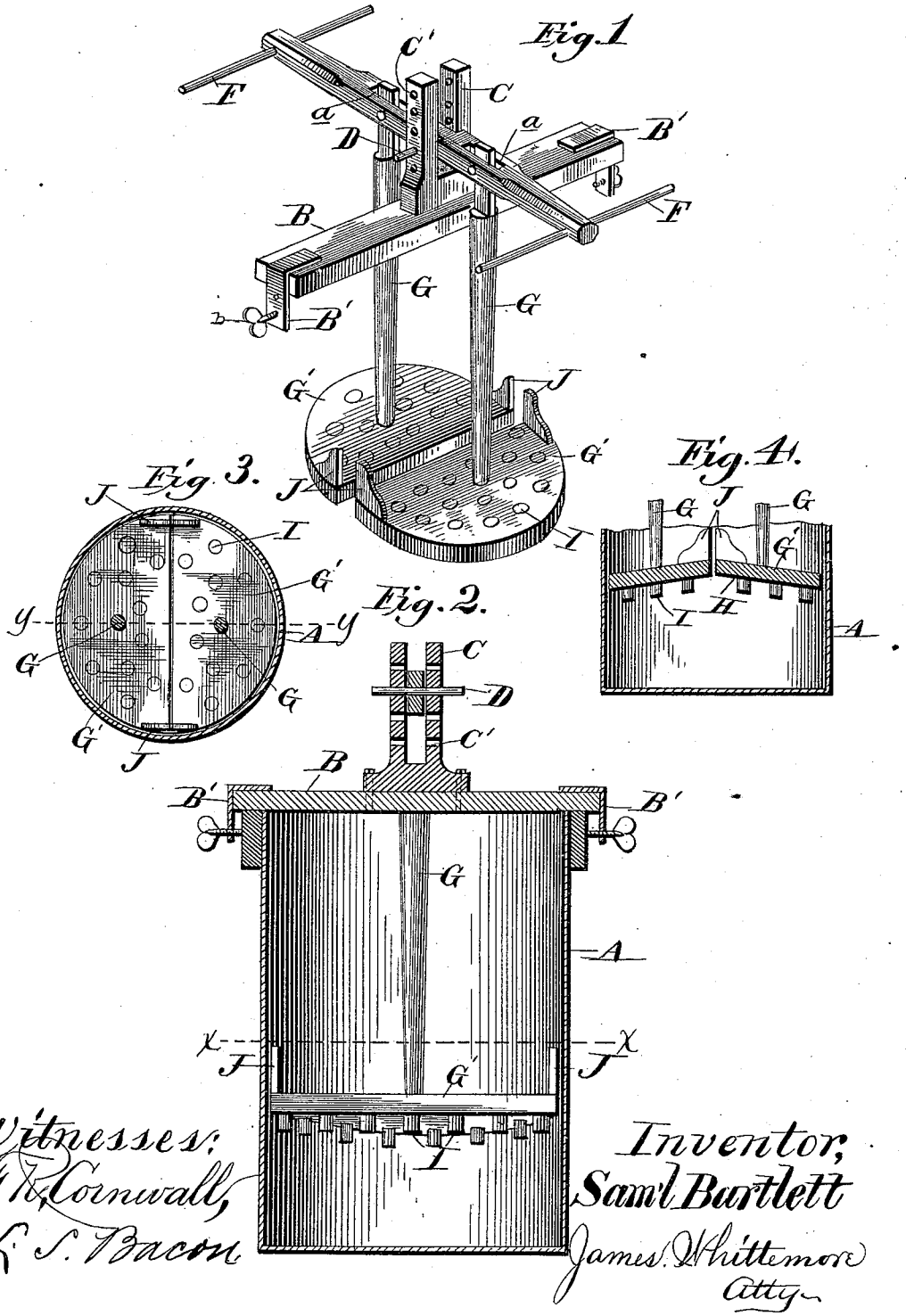

THE NORRIS PETERS CO., PHOTO-LITHO., WASHINGTON, D. C.

UNITED STATES PATENT OFFICE.

SAMUEL BARTLETT, OF TOLEDO, OHIO.

WASHING-MACHINE.

SPECIFICATION forming part of Letters Patent No. 426,755, dated April 29, 1890.

Application filed December 17, 1889. Serial No. 334,025. (No model.)

To all whom it may concern:

Be it known that I, SAMUEL BARTLETT, a citizen of the United States, residing at Toledo, in the county of Lucas and State of Ohio, have invented certain new and useful Improvements in Washing-Machines, of which the following is a specification, reference being had therein to the accompanying drawings.

This invention relates to new and useful improvements in washing-machines; and the invention consists in the peculiar construction, arrangement, and combination of the various parts, whereby a great efficiency is obtained with simplicity of construction, all as more fully hereinafter described.

In the drawings which accompany this specification, Figure 1 is a perspective view of the operating parts of my washer detached. Fig. 2 is a horizontal central cross-section thereof as arranged in the tub, ready for washing. Fig. 3 is a horizontal section on line *x x* in Fig. 1. Fig. 4 is a vertical section on line *y y* in Fig. 3.

A is a tub of any desired construction to which my washing-machine is designed to be attached.

B is the supporting-frame or cross-bar, placed centrally across the top of the tub and secured thereon by means of clamps B′, consisting of angular pieces of metal projecting below the cross-bar and having thumb-screws *b* passing through their lower part, adapted to impinge against the sides of the tub.

C is a bifurcated vertical standard, provided with suitable adjusting-holes C′, in which is secured the pin or pivot D, supporting the walking-beam at any desired height. This walking-beam is provided with suitable handles F for the operator, also with suitable slots *a a*, in which are pivotally supported the pounder-supporting rods G, which at their lower ends carry the pounder-heads G′, preferably of semicircular shape, the two pounder-heads together filling the tub in cross-section, or nearly so. The lower faces H of these pounder-heads are inclined toward the middle of the tub, and are also provided with suitable pins I on said inclined faces.

J are bearing-blocks arranged on the upper faces of the pounder-heads at the meeting edges thereof.

The parts being thus constructed and arranged, they are intended to operate as follows: The clothes and water being placed in the tub, the operator taking hold of the handles F of the walking-beam E vertically reciprocates the beam, moving the pounders up and down. It will be seen that in this action as one pounder comes down the clothes will be rapidly compressed and the water rapidly forced to the other side of the tub. When the other pounder is depressed, the water will be forced to the other side, thus thoroughly washing the clothes. The bearing-blocks J are of suitable length to prevent the pounders from overlapping each other and thus interfering with their proper action. It will be seen that there is nothing in the tub in the shape of guides or supports to interfere with the operation of the pounders or by means of which the clothes may be torn.

A device thus constructed is simple in its operation and economical in manufacture, and is easily operated and efficient in performing its work. The vertical bifurcated standard C forms a guide for the walking-beam as well as a support therefor.

What I claim as my invention is—

In a washing-machine, the combination, with the cylindrical tub and the cross-bar having the bifurcated perforated standard thereon, and clamps for securing the bar to the tub, of two inclined semicircular heads G′, having depending pins therein, and guides or bearing-blocks J on their outer edges, opposite each other, the vertical rods G, centrally secured to the heads, the walking-beam in which the upper ends of the rods are pivoted, and a pin for adjustably securing the walking-beam in the standard, substantially as described.

In testimony whereof I affix my signature, in presence of two witnesses, this 27th day of November, 1889.

SAMUEL BARTLETT.

Witnesses:
ALFRED NAUTS,
CHAS. H. NAUTS.