Jan. 18, 1944. W. W. SLOANE 2,339,523

KERF-CUTTING MACHINE

Filed March 19, 1943 6 Sheets-Sheet 1

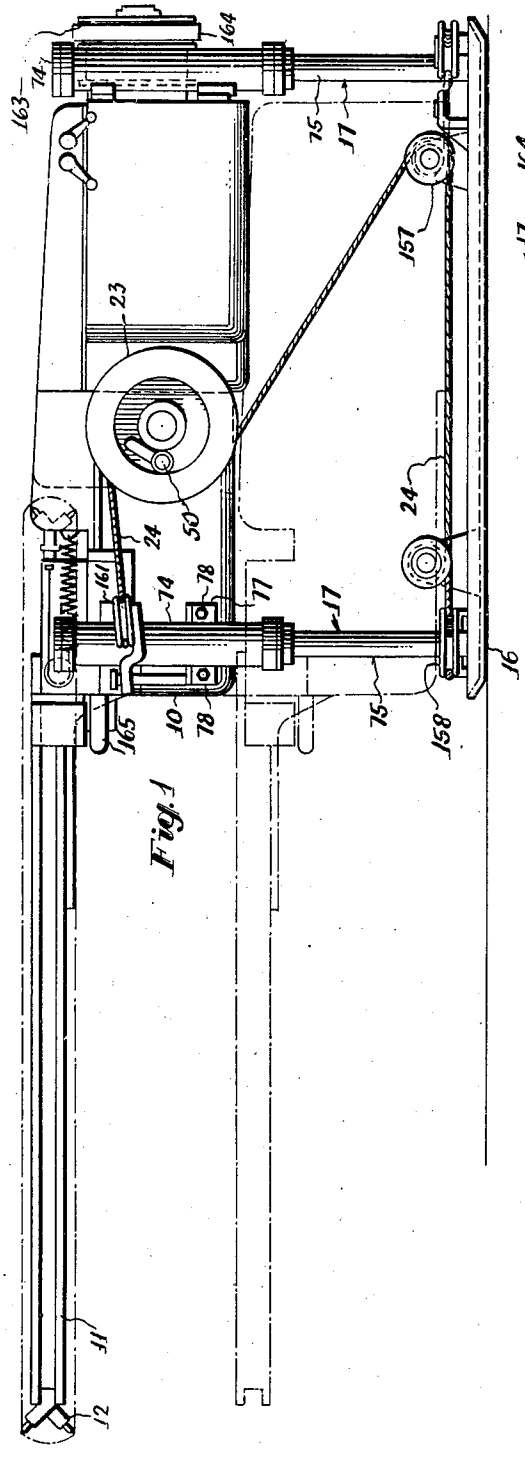

Fig. 1

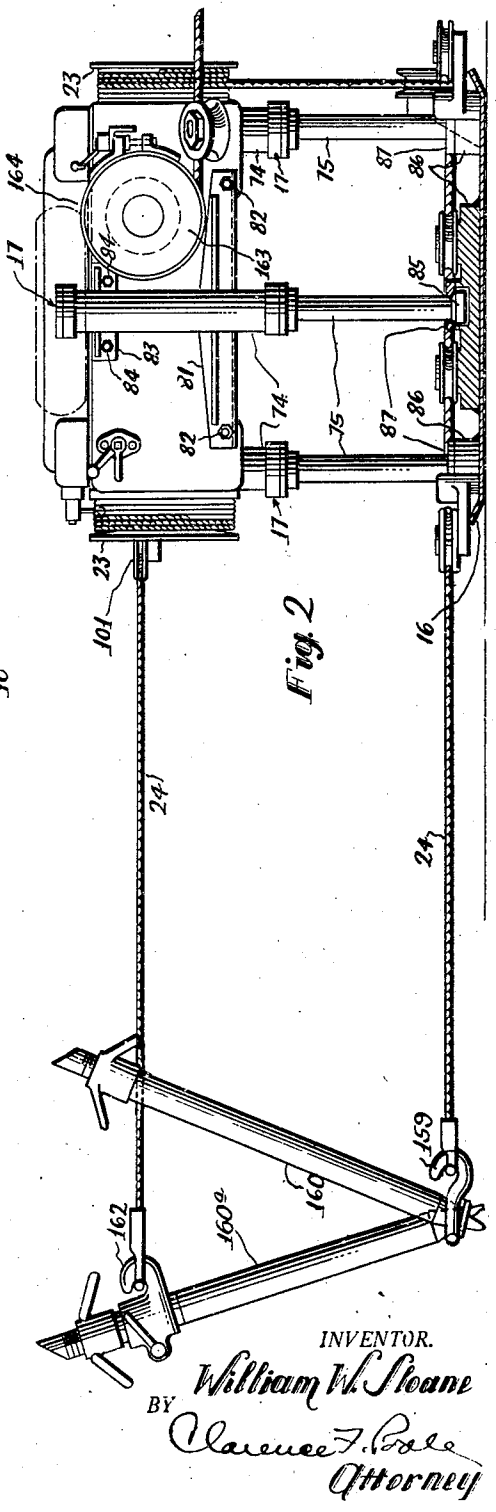

Fig. 2

INVENTOR.
William W. Sloane
BY
Clarence F. Poole
Attorney

Jan. 18, 1944. W. W. SLOANE 2,339,523

KERF-CUTTING MACHINE

Filed March 19, 1943 6 Sheets-Sheet 2

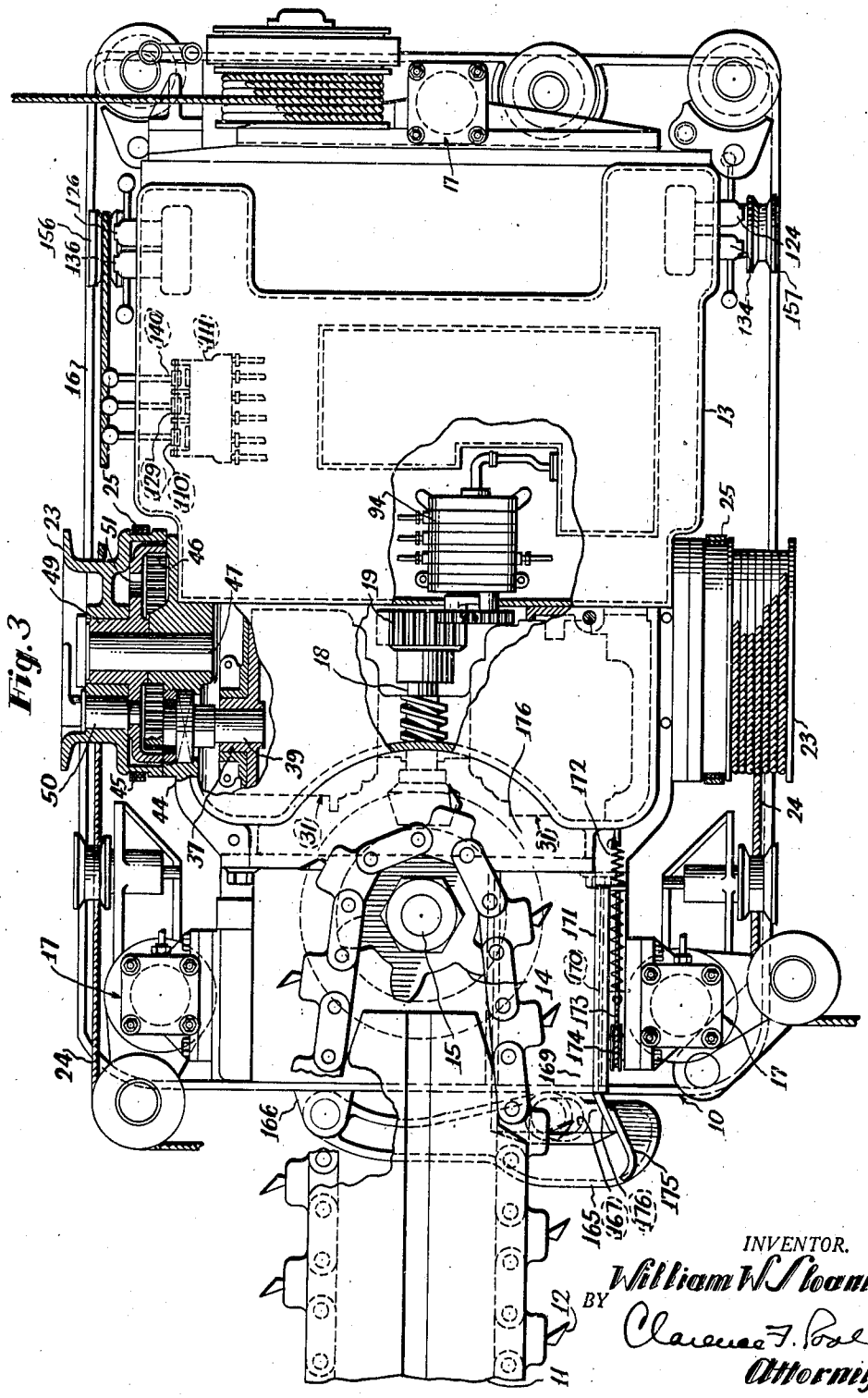

Fig. 3

INVENTOR.
William W. Sloane
BY Clarence F. Poole
Attorney

Jan. 18, 1944. W. W. SLOANE 2,339,523

KERF-CUTTING MACHINE

Filed March 19, 1943 6 Sheets-Sheet 3

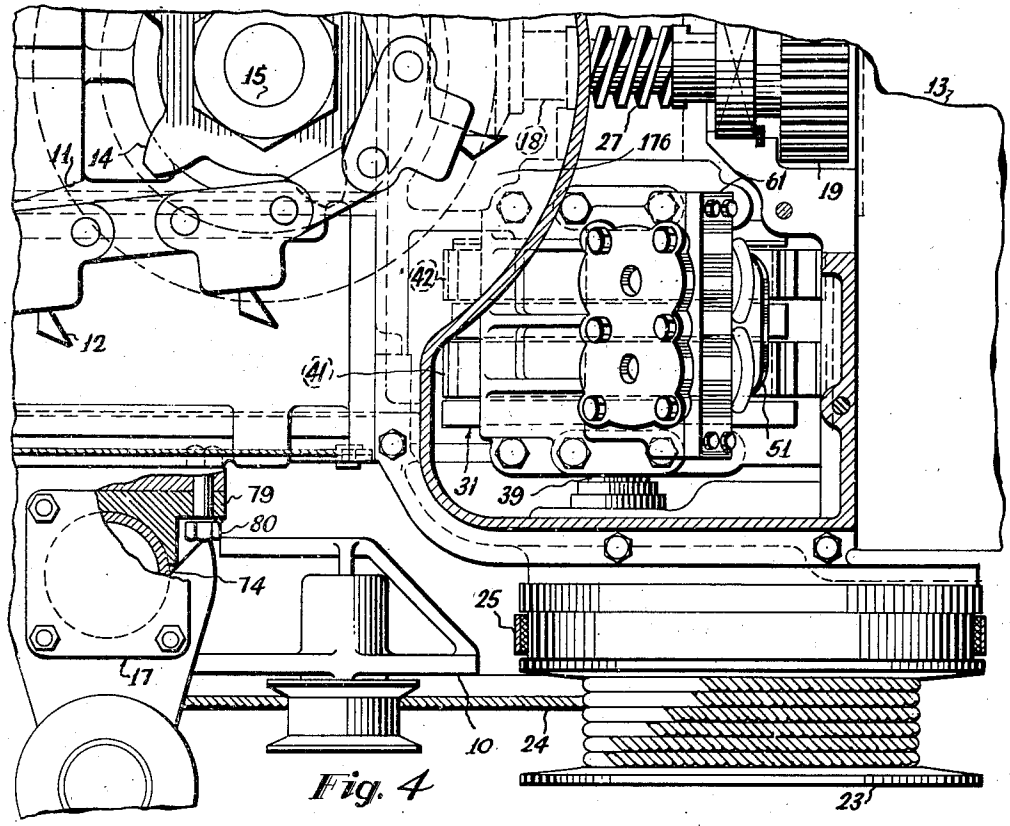

Fig. 4

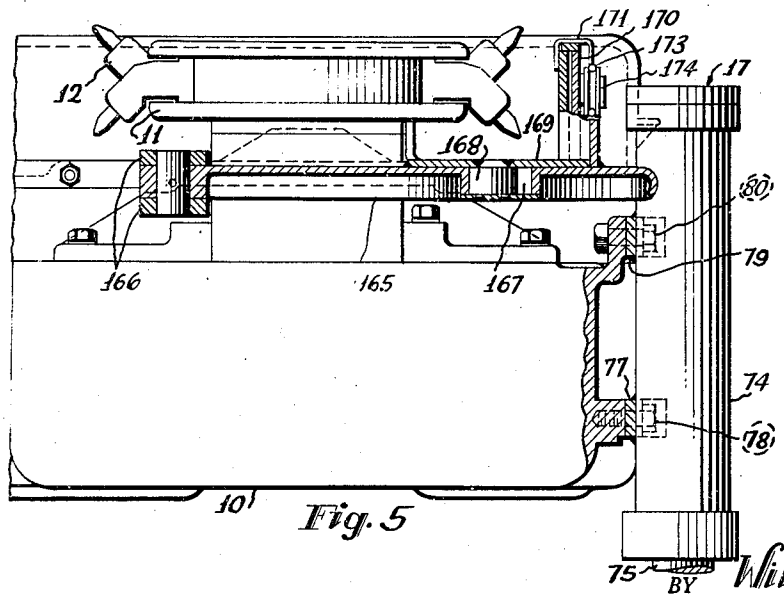

Fig. 5

INVENTOR.

William W. Sloane

BY Clarence F. Poole

Attorney

Jan. 18, 1944. W. W. SLOANE 2,339,523

KERF-CUTTING MACHINE

Filed March 19, 1943 6 Sheets-Sheet 4

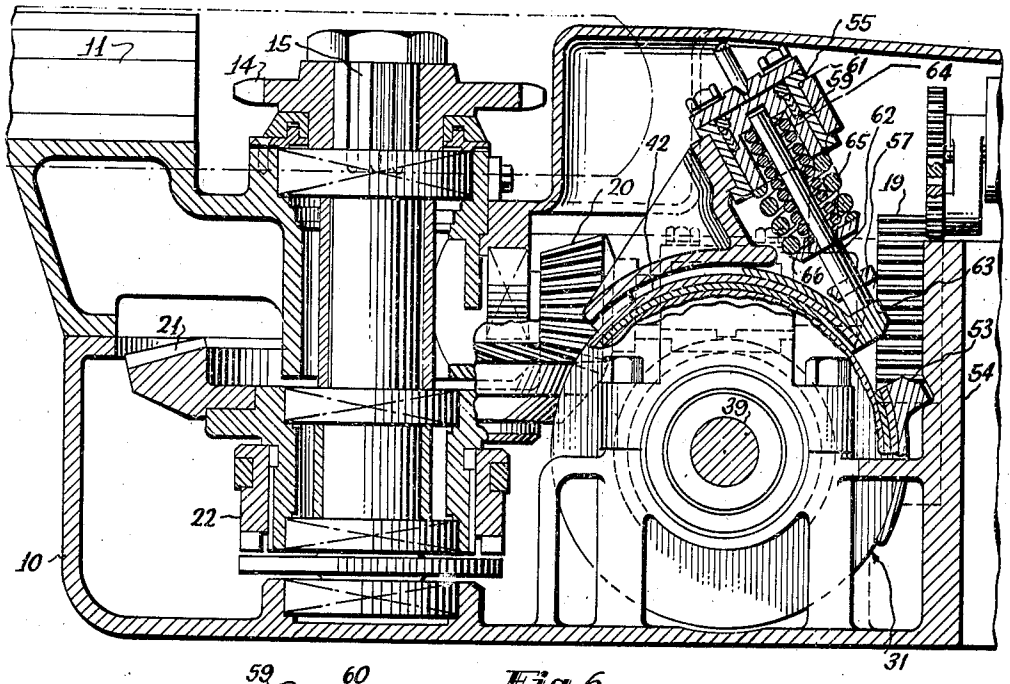

Fig. 6

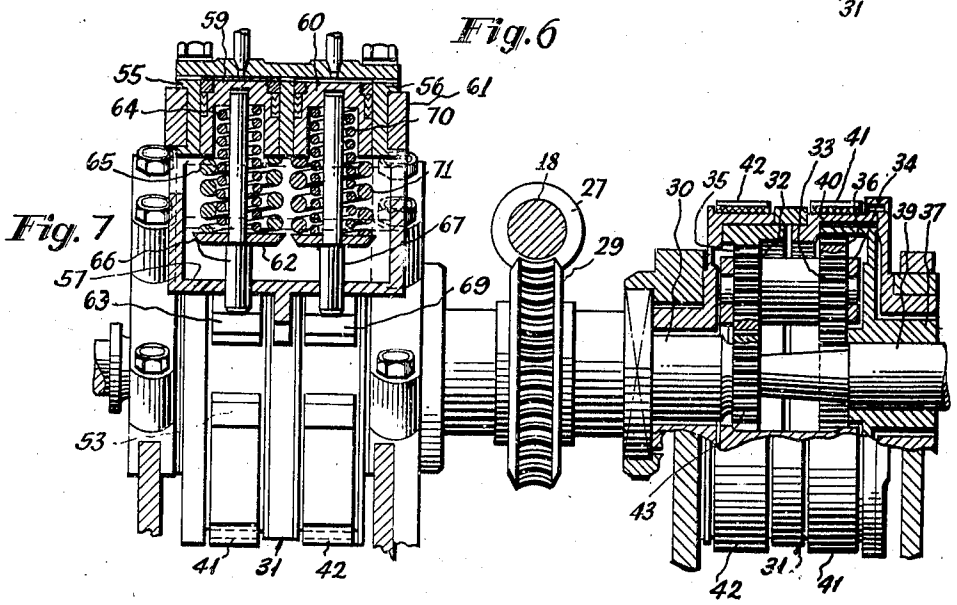

Fig. 7

INVENTOR.
William W. Sloane
BY
Clarence F. Poole
Attorney

Jan. 18, 1944. W. W. SLOANE 2,339,523

KERF-CUTTING MACHINE

Filed March 19, 1943 6 Sheets-Sheet 5

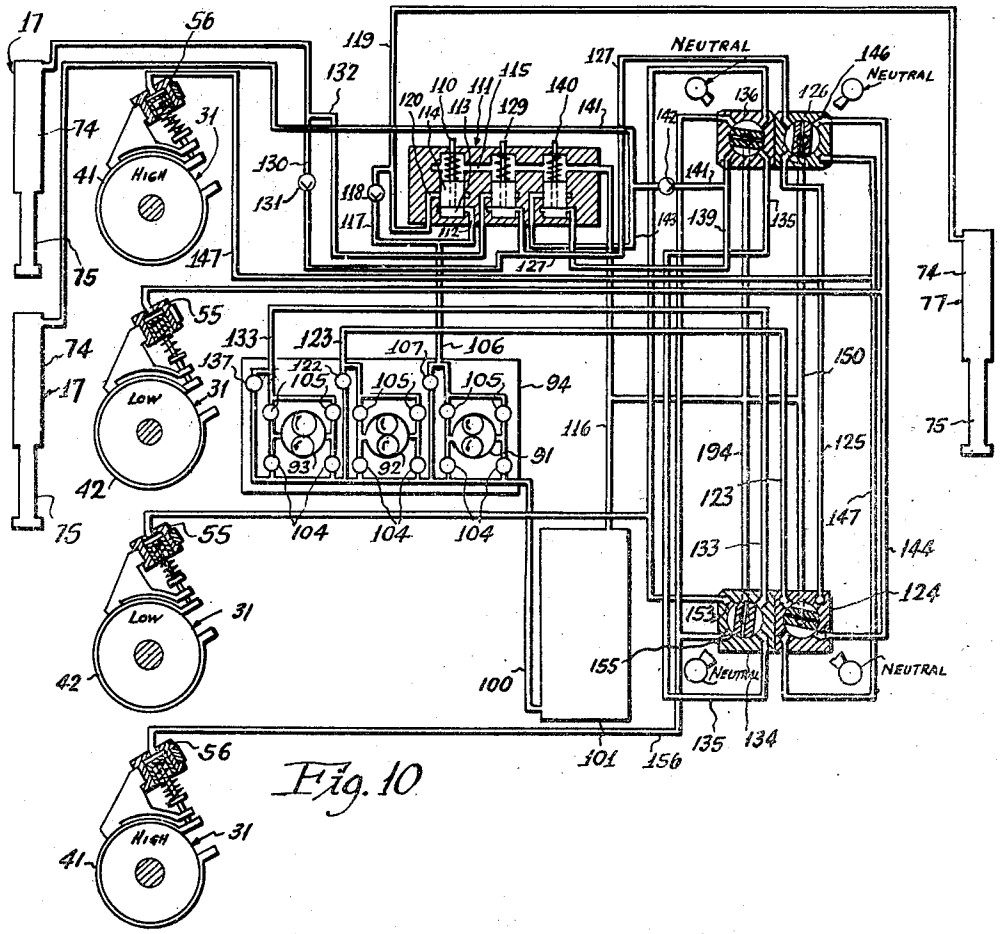

Fig. 10

Fig. 8

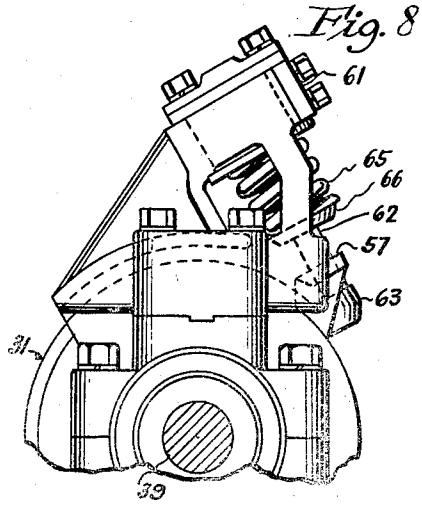

Fig. 9

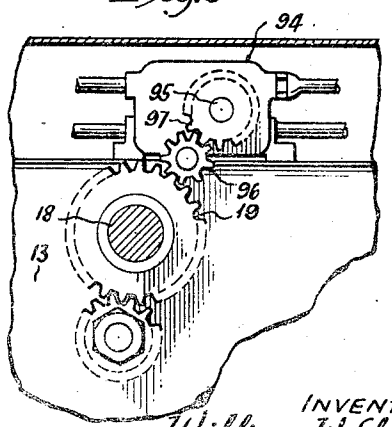

INVENTOR
William W. Sloane
Clarence F. Poole
ATTORNEY

Jan. 18, 1944. W. W. SLOANE 2,339,523

KERF-CUTTING MACHINE

Filed March 19, 1943 6 Sheets-Sheet 6

Fig. 11

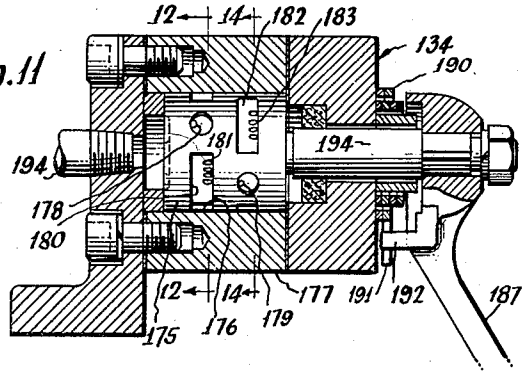

Fig. 12

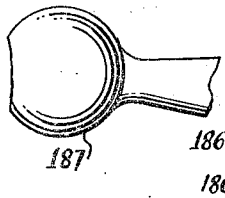

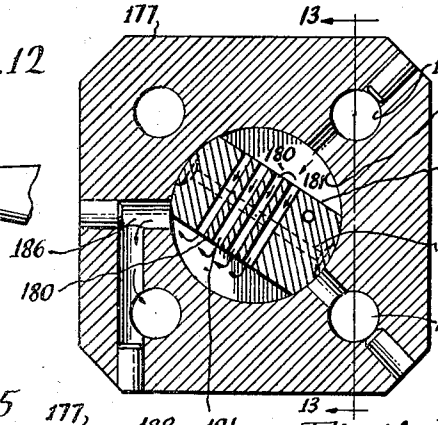

Fig. 13

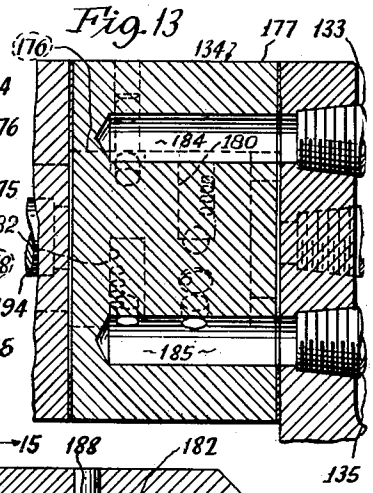

Fig. 15

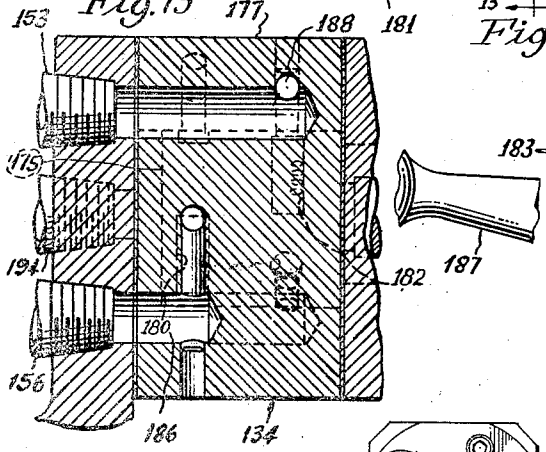

Fig. 14

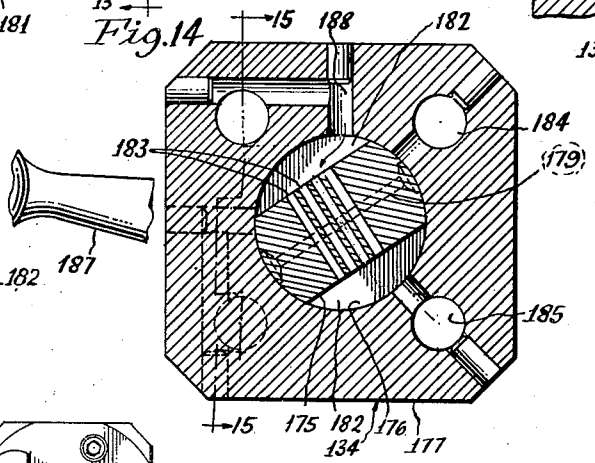

Fig. 16

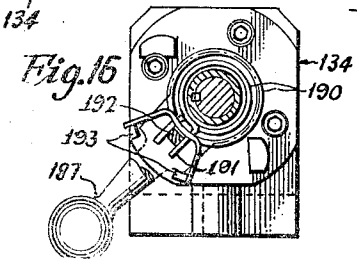

INVENTOR
William W. Sloane
Clarence F. Poole
ATTORNEY

Patented Jan. 18, 1944 2,339,523

UNITED STATES PATENT OFFICE

2,339,523

KERF-CUTTING MACHINE

William W. Sloane, Chicago, Ill., assignor to Goodman Manufacturing Company, Chicago, Ill., a corporation of Illinois

Application March 19, 1943, Serial No. 479,717

21 Claims. (Cl. 262—30)

This invention relates to improvements in kerf-cutting machines and more particularly relates to an improved kerf-cutting machine of the room and pillar type which is adapted to cut a horizontal kerf in the mine wall at various desired elevations with respect to the ground.

The principal objects of my invention are to provide a new and improved kerf-cutting machine of the class described, together with a novel form of support for the cutter bar permitting the cutter bar to readily follow and cut out a band of impurities in a coal face, spaced above the mine bottom, where the band is uneven or does not conform to the mine floor or roof.

A more specific object of my invention is to provide a novel arrangement of fluid pressure jacks for supporting the cutting element of a kerf-cutting machine, together with a novel fluid pressure system for independently controlling operation of the jacks so as to effect elevation and tilting of the cutting element during operation of the machine, to make it possible for the cutting element to follow a definite band in the coal face during the cutting operation.

Other objects of my invention will appear from time to time as the following specification proceeds and with reference to the accompanying drawings wherein:

Figure 1 is a view in side elevation of a kerf-cutting machine constructed in accordance with my invention, showing the cutter bar in an elevated position;

Figure 2 is a rear end view of the machine shown in Figure 1;

Figure 3 is an enlarged plan view of the machine shown in Figure 1, with certain parts broken away and certain other parts shown in horizontal section;

Figure 4 is an enlarged detail fragmentary plan view of a portion of the machine shown in Figure 1, illustrating certain details of the support for one of the fluid pressure jacks;

Figure 5 is a partial fragmentary front end view of the kerf-cutting machine embodying my invention, with certain parts shown in substantially transverse section;

Figure 6 is an enlarged fragmentary view of the front end of the machine, with certain parts broken away and certain other parts shown in substantially longitudinal section;

Figure 7 is an enlarged fragmentary detail partial transverse sectional view of the machine, illustrating certain details of the planetaries for driving the feed drums of the machine, and certain details of the control means for said planetaries;

Figure 8 is an enlarged detail view illustrating certain details of the control means for one of the planetaries, not shown in Figure 7;

Figure 9 is a partial fragmentary transverse sectional view, illustrating the drive to the fluid pumps which supply fluid under pressure to the machine;

Figure 10 is a fluid diagram illustrating the fluid pressure system, for controlling operation of the machine;

Figure 11 is a longitudinal sectional view taken through one of the control valves for controlling operation of one of the feed drums for the machine, with the valve rotor shown in full;

Figure 12 is a sectional view taken substantially along line 12—12 of Figure 11;

Figure 13 is a sectional view taken substantially along line 13—13 of Figure 12;

Figure 14 is a sectional view taken substantially along line 14—14 of Figure 11;

Figure 15 is a sectional view taken substantially along line 15—15 of Figure 14; and

Figure 16 is a fragmentary plan view of the control valve, illustrating certain details of the spring connections to the control handle, for holding the control handle in a predetermined position when the hand is removed therefrom.

The invention illustrated in the drawings is shown as being embodied in a top cutting kerf-cutting machine of the room and pillar type. Said kerf-cutting machine includes a main frame 10, having a horizontally extending cutter bar 11 projecting from the front end thereof. Said cutter bar has a cutter chain 12 guided for orbital movement thereabout, and as herein shown, is mounted in a recessed cuttings passageway on the top side of said main frame. A motor 13 is mounted at the rear end of said main frame and forms a means for driving said cutter chain about said cutter bar, through a sprocket 14 meshing with said cutter chain and herein shown as being splined on the upper end of a vertical shaft 15, suitably journaled in said main frame (see Figure 6).

A base plate 16 having upturned sides and ends and adapted to be slidably movable along the ground, on its bottom, during the cutting operation, forms a mounting for said kerf-cutting machine on the ground. The kerf-cutting machine is mounted on said base for vertical adjustment and for tilting movement with respect thereto by means of three fluid pressure jacks 17, 17, two of which are mounted at opposite sides of the

forward end of said base and the third of which is mounted at the central rear end of said base, to provide a three-point mounting for said kerf-cutting machine on said base. The supporting connection between said jacks and said kerf-cutting machine will hereinafter be more clearly described as this specification proceeds.

The drive connection from the motor 13 to the shaft 15 and sprocket 14, for driving the cutter chain 12 about the cutter bar 11, includes an intermediate shaft 18 extending longitudinally of the main frame 10 and journaled therein and driven from said motor through a gear train indicated generally by reference character 19. A bevel pinion 20 on the forward end of said intermediate shaft meshes with and drives a bevel gear 21 journaled on the vertical shaft 15, for rotatable movement with respect thereto. A sliding clutch 22, herein shown as being a jaw clutch, is provided to selectively drive said shaft and sprocket from said bevel gear.

The feeding means for the machine includes a pair of winding drums 23, 23 rotatably mounted on opposite sides of the main fame 10. Each of said winding drums has a flexible cable 24 adapted to be wound thereon or payed off therefrom, and is adapted to be engaged by a friction band 25 for retarding rotation thereof, when disconnected from the drive motor 13, enabling either one of said winding drums to serve as a retarding means to control the travel of the machine across the coal face during the cutting operation.

The drive from the motor 13 to the winding drums 23, 23 includes a worm 27 on the intermediate shaft 18, which meshes with a worm gear 29 on a transversely extending sleeve 30. Said sleeve 30 is journaled in the main frame 10 and forms a drive means for a pair of coaxial planetary gear reduction devices indicated generally at 31, 31, arranged at opposite sides of said sleeve. The form of planetary gear shown herein is of the same general type commonly used in kerf-cutting machines, so need not be described in detail except to point out that planetary pinions 32 and 33 of different pitch diameters and mounted in a cage 34 for rotation together are meshed respectively with internal gears 35 and 36 (see Figure 7).

The internal gear 36 has a hub 37 keyed on a driven shaft 39. The cage 34 has a driven portion 40 which encloses the internal gear 36 and which has a friction band 41 extending thereabout, for holding said cage from rotation. A similar friction band 42 surrounds and is adapted to hold the internal gear 35 from rotation. The planetary pinions 32, 32 are meshed with and driven from a sun gear 43 on the sleeve 30, and when the friction band 41 is loose so the cage 34 may freely rotate, and the friction band 42 is tightened to hold the internal gear 35 from rotation, said planetary pinions will orbitally move about said internal gear, to drive the shaft 39 at a slow frictionally controlled speed through the internal gear 36, keyed on said shaft. When the friction band 42 is loosened and the friction band 41 is tightened, the cage 34 will be held from rotation and the shaft 39 will be driven at a frictionally controlled high speed.

The driven shaft 39 is journalled in a side wall 44 of the main frame 10 and has a pinion 45 keyed on its outer end, which meshes with an internal gear 46, journaled on its hub on a stub shaft 47, mounted in and projecting outwardly from said main frame. The winding drum 23 is freely mounted on an outwardly projecting hub 49 of said internal gear and has a pin 50 mounted therein for transverse slidable movement with respect thereto. The inner end of said pin is adapted to engage any one of a plurality of apertures 51, 51 formed in the web of said internal gear, to form a selective drive connection from said internal gear to said winding drum.

The friction bands 41 and 42 are engaged with their respective drums, to hold the cage 34 or internal gear 35 from rotation by means of fluid cylinders 55 and 56, having pistons 59 and 60 movable therein. Each set of said cylinders is mounted in a frame 61, disposed above and extending across its respective planetary 31. The piston 59 has a plunger 62 mounted therein for limited slidable movement with respect thereto. Said plunger is slidably guided in a lower wall 57 of said frame and has engagement at its outer end with an abutment member 63, projecting outwardly from one end of the friction band 42. The opposite end of said friction band has a lug 53 thereon, which abuts a notched portion of an inner wall 54 of said housing (see Figure 6). A pair of concentric compression springs 64 and 65 encircle said plunger and are interposed between the inside of said piston and a collar 66, mounted on said plunger, to serve as a cushioning means when pressure is applied on said piston to engage said friction band with its associated drum. Said springs are provided to prevent a sudden gripping of the friction drum by said friction band as fluid is supplied to said cylinder 55 and to enable said band to be uniformly engaged with said friction drum by said fluid cylinder and piston. Said springs also serve to return the pistons 59 and 60 to the head ends of their respective cylinders, and to empty fluid from said cylinders, when fluid pressure is relieved therefrom.

In a like manner, a plunger 67 is mounted in the piston 60 for limited slidable movement with respect thereto and is slidably guided in the wall 57 of the frame 61. The end of said plunger opposite from said piston abuts a lug 69 projecting outwardly from the free end of the friction band 41. A pair of coaxial compression springs 70 and 71 encircle said plunger and serve as a cushioning means, effective when applying said friction band through the associated piston 60, and permitting uniform engagement of said friction band with its associated drum. The fluid pressure system for selectively controlling the admission and release of fluid under pressure to and from said cylinders and pistons will hereinafter be more fully described as this specification proceeds.

Each of the threee jacks 17, 17, mounted on the base 16 and forming a vertically adjustable and tilting support for the cutting element, includes a fluid cylinder 74 having a piston 75 extensible therefrom. The two cylinders at the forward end of the machine each have a support bracket 77 secured to the inner side thereof adjacent their lower ends, which brackets project laterally from said cylinders in opposite directions and are secured to the main frame 10 adjacent the lower end thereof, by cap screws 78, 78. The upper portion of said forward cylinders each have a support bracket 79 secured to the inner side thereof and projecting laterally from said cylinder in opposite directions. Said brackets are secured to said main frame by nuts and bolts 80, 80 (see Figure 5).

The rear fluid cylinder 74 has a relatively wide

support bracket 81 secured thereto adjacent its lower inner end and projecting laterally therefrom in opposite directions. Said bracket extends along the lower portion of the rear end wall of the casing for the motor 13, and is secured to said end wall of said motor casing by cap screws 82, 82 (see Figure 2). The upper portion of said cylinder is secured to the rear end wall of said motor by a support bracket 83, projecting laterally in opposite directions from the inside of said cylinder and secured to said rear end wall of said motor by cap screws 84, 84.

The lower ends of the pistons 75, 75 each have an enlarged foot 85 which fits within a socket 86 mounted in and projecting upwardly from the top of the base 16 (see Figure 2). A cap piece 87 is mounted on the top of said socket portion and encircles the lower end of said piston and the foot 85 to retain said piston on said base plate. Clearance is provided between said foot and socket and said cap piece and foot and piston, to permit limited axial movement of said piston with respect to said base about its lower end, to permit the jacks 17, 17 to tilt the machine and conform to the angle of inclination of said main frame.

It may be seen from the foregoing that when fluid under pressure is simultaneously admitted to the three cylinders 74, 74 at the same pressure, the cutter bar 11 will be elevated in a plurality of parallel planes and that tilting of said cutter bar may be effected by admitting fluid under pressure to any of said cylinders while the other cylinders are stationary, or by cutting off the flow of fluid to any one or more cylinders, or by releasing fluid pressure therefrom, while the entire cutting element is being elevated or lowered by the other cylinders.

Referring now in particular to the fluid pressure system and the means for controlling the admission and release of fluid to the cylinders 55, 55 and 56, 56, for controlling operation of the planetaries 31, 31, and to the fluid cylinders 74, 74, for controlling the elevation or tilting of the cutter bar 11, three fluid pumps 91, 92 and 93 are provided. Said fluid pumps are shown as being of a reversible type so as to provide pressure in the fluid system when the motor 13 is rotating in a forward or reverse direction, and are herein shown as being mounted in a casing 94 and as being driven from a common drive shaft 95.

The drive to the pumps 91, 92 and 93 from the motor 13 includes a pinion 96 driven from the gear train 19 and meshing with and driving a gear 97 on the pump drive shaft 95 (see Figure 9).

Fluid is supplied to the pumps 91, 92 and 93 through a suction line 100 leading from a fluid storage tank 101. Said suction line 100 is connected to opposite sides of each one of the pumps 91, 92 and 93, for supplying fluid thereto, when the motor 13 is rotating in a forward or reverse direction. Check valves indicated generally by reference characters 104, 104 and 105, 105 are provided within said casing, for each pump, to control the direction of the flow of fluid to each pump, when the direction of rotation of the pump is reversed. Said check valves serve a well known function and may be of any well known form and are no part of my present invention, so are not herein shown or described in detail.

Fluid is supplied to the rear fluid cylinder 74 by means of the fluid pump 91 through a pressure line 106 leading from said pump. A relief valve 107 is connected in said pressure line, to relieve pressure from said pressure line upon overload. Said relief valve is herein diagrammatically shown as being mounted within the casing 94, but may be placed outside of said casing, if desired.

The pressure line 106 leads to a valve 110 in a valve manifold 111. Said valve is diagrammatically shown as being a piston valve of a well known form and is normally in a position to release fluid to the return. When said valve is in the position shown in Figure 10, which is the position said valve will assume when the hand is removed from its control lever, fluid will flow from the line 106 through a passageway 112 to a chamber 113. Fluid will then flow through a hollow piston 114 of said valve, through a passageway 115 in said valve manifold, to return to the tank 101 through a return line 116. When said valve 110 is in a depressed position, the piston 114 will block the passageway 112, and fluid under pressure will flow through a pressure line 117, a non-reversible check valve 118, a pressure line 119, to the rear elevating cylinder 74, for supplying fluid under pressure thereto. When it is desired to release pressure from the cylinder 74, the piston 114 is moved in an upward direction to uncover a passageway 120, leading to the chamber 113 and directly connected with the pressure line 119. When said valve is in this position, the passageway 112 will also be open and fluid will pass through the pressure line 119, port 120, through the hollow piston 114, passageway 115, and return line 116, to the tank 101. When the hand is removed from the control handle for said valve, the piston 114 is moved to the neutral position shown. The passageway 120 will then be closed and pressure will be held in the fluid cylinder 74 through the check valve 118.

In a like manner, the pump 92 is adapted to supply fluid under pressure to the forward right-hand cylinder 74. A relief valve 122 is provided in the pump casing and is connected between a pressure line 123 and the suction line 100. Said pressure line 123 leads to a valve 124, which is provided to control operation of the right-hand planetary 31. A pressure line 125 connects said valve 124 to a valve 126 on the opposite side of the machine from the valve 124. The valve 126 is like the valve 124 and is provided to permit operation of the planetaries 31, 31 from either side of the machine. Said valves 124 and 126 are so arranged as to be yieldably held in a neutral position, when the hand is removed from the associated control handle thereof, and to hold pressure on the desired planetary operating cylinder when in a neutral position, so fluid under pressure will pass through said valves to supply pressure to the associated forward jack cylinder 74, during operation of the machine, as will hereinafter more clearly appear as this specification proceeds. A pressure line 127 leads from the valve 126 to a valve 129 in the valve manifold 111. Said valve operates in the same manner as the valve 110 and is adapted to by-pass fluid from the pump 92 and valves 124 and 126, or to release fluid from the fluid cylinder 74 in the same manner as the valve 110, so will not herein be described in detail. A pressure line 130 leads from the pressure line 127 to the right-hand forward fluid cylinder 74, for supplying fluid under pressure thereto. A non-reversible check valve 131 is provided in said

pressure line to hold pressure in said cylinder and to permit fluid under pressure to pass therein when the valve 129 is depressed to close the passageway to return. A return line 132 is connected with the pressure line 130, on the pressure side of the check valve 131, to permit the release of fluid pressure from said right-hand cylinder 74 through said valve 129.

The left-hand cylinder 74 is supplied with fluid under pressure from the pump 93. A relief valve 137 is provided for said pump. A pressure line 133 leads from said pump to a valve 134, adjacent the valve 124, and provided for controlling the operation of the left-hand planetary 31. Said valve is herein shown as being a rotary valve like the valve 124. A pressure line 135 connects said valve 134 with a valve 136 on the opposite side of the machine, to supply fluid under pressure thereto. The valve 136 is like the valve 126 and is provided to permit operation of the left-hand planetary 31 from either side of the machine. Said valves 134 and 136, like the valves 124 and 126, are yieldably held in a neutral position when the hand is removed from the associated control handle thereof, to permit fluid under pressure to pass through said valves to the associated jack cylinder 74, during operation of the machine. A pressure line 139 leads from the valve 136 to a valve 140 in the manifold 111. Said valve is similar to the valves 110 and 129 and is provided to control the admission and release of fluid under pressure to the left-hand front cylinder 74 in the same manner the valves 110 and 128 control the admission and release of fluid under pressure to the rear and right-hand front cylinders respectively. A pressure line 141 is connected to the pressure line 139 and has a non-reversible check valve 142 therein. Said pressure line leads to the left-hand forward cylinder 74, for supplying fluid under pressure thereto. A return line 143 is connected to said pressure line and to the valve 140, to permit the return of fluid from the cylinder 74 to the tank 101 through the valve 140, when it is desired to release pressure from said left-hand forward cylinder.

It may be seen from the foregoing that each fluid pump 91, 92 and 93 is connected with a separate fluid cylinder 74, and that a separate control valve associated with each one of said pumps is provided to control the admission and release of fluid to said separate cylinders. It may further be seen that fluid is supplied to said cylinders through non-reversible check valves, by blocking the flow of fluid to the return, so as to prevent any lag in operation of the respective jacks after operation of the control handles for the respective jack operating valves. Thus, any one cylinder may be operated independently of the others and the cutter bar may be tilted as it is being elevated or lowered, to readily position it for cutting.

In order that the fluid circuits to the cylinders 55, 55 and 56, 56 may be more clearly understood, the valve 134 illustrated in Figures 10 to 16 inclusive will now be briefly described, it being understood that said valve is of the same construction as the valves 124, 126 and 136. Said valve includes a valve rotor 175 rotatably mounted in a cylindrical chamber 176 formed in a valve casing 177. Said valve rotor is provided with a pair of spaced balancing passageways 178 and 179 extending therethrough, to balance the valve rotor when the pressure line is blocked by said rotor. Said passageways extend diametrically through said rotor in different angular directions. Said rotor is also provided with a pair of oppositely disposed milled fluid passageways 180, 180 extending across an outer portion thereof and in line with the balancing passageway 178. Said milled passageways 180, 180 are connected together by a plurality of passageways 181, 181 extending across the rotor and spaced from said balancing passageway 178, to permit the passage of fluid from one side of the rotor to the other (see Figure 12). Said rotor is likewise provided with a pair of oppositely disposed milled passageways 182, 182 in line with the balancing passageway 179. Passagaeways 183, 183 connect said milled passageways together (see Figure 14).

Fuid under pressure enters the valve 134 through the pressure line 133. Said pressure line is connected with a port 184 extending into the casing 177 parallel to the rotor 175 and opening into the chamber 176, in alignment with the passageways 180 and 182 (see Figure 13). Fluid is exhausted from said valve through a port 185 communicating with the exhaust line 135 and extending into said casing parallel to said rotor and opening into the chamber 176 in alignment with the passageway 180 and 182.

Fluid under pressure passes through the valve 134 and is conducted to the cylinder 56, for controlling operation of the high speed friction band for the left-hand planetary 31, when a control handle 187 for said valve is turned to an extreme position in a clockwise direction or to the left, as indicated in Figure 12. When said valve is in this position, fluid will enter the passageway 180 through the port 184. It will then pass through the passageways 181, 181 to the passageway 186, which communicates with a port 188 communicating with a pressure line 156. Fluid will thus be conducted through said port 188 and pressure line 156 to the cylinder 56, to charge said cylinder and apply the brake band 41 for the left-hand planetary in an obvious manner.

When the valve 134 is in this last named position, fluid will be exhausted from the cylinder 55 controlling operation of the low speed friction band 42 for the left-hand planetary 31 through a pressure line 153 leading from said cylinder and communicating with a port 189 in the valve casing 177. Said port opens into the chamber 176 in alignment with the passageway 182 in the rotor 175 (see Figures 14 and 15). Fluid will thus enter the passageway 182 and pass through the rotor 175 through the passageways 183, 183 and leave said rotor through the exhaust port 185.

Thus in the extreme clockwise position of the control handle 187, the cylinder 56 for the left-hand high speed planetary will be charged and the cylinder 55 for the low speed planetary will be discharged to cause the left-hand feed drum to be driven at a high positioning speed.

The valve rotor 175 and the passageways 186, 189 therein are so arranged, however, that when the valve handle 187 is turned in an opposite direction the port 186 will be blocked by said rotor until said rotor has been turned beyond a neutral position, and the port 188 will be open to exhaust during the same period of movement of said rotor. Also, during this period of movement of said rotor, when the port 186 has been blocked, fluid will pass directly through said valve from the pressure line 133 to the exhaust line 135. When said valve rotor is in a neutral

position the ports 186 and 188 will be blocked, to hold pressure on the cylinder 56 and to prevent fluid from entering the cylinder 55. In this position fluid will pass from the pressure port 184 through the passageways 182, 182 and out the exhaust port 185, where it may either be returned to the tank 101 or be used to operate the left-hand forward jack 17, in the hereinbefore described manner.

A pair of coil springs 190, 190 are provided to return the valve rotor 175 to a neutral position as soon as the hand is removed from the control handle. Said springs each have an outwardly turned inner end 191, which inner ends abut opposite sides of a lug 192 projecting downwardly from said control handle. The opposite ends of said springs abut spaced stops 193, 193 projecting outwardly from said valve casing. (See Figure 16.)

When it is desired to supply fluid under pressure to the cylinder 55, for applying the low speed left-hand friction band 42, the valve rotor 175 is turned in a clockwise direction to an extreme position to the right. In this position fluid will pass from the pressure passageway 184, the milled passageway 182, through the passageways 183, 183, the opposite passageway 182, and out through the port 188, to and through the pressure line 153, to charge said cylinder. In this position of said valve rotor and control handle, fluid will be exhausted from the left-hand high speed control cylinder 56 through the milled passageway 180, passageway 181, and exhaust passageway 185. As soon as the hand is removed from the control handle, however, said valve rotor will be returned to a neutral position, holding pressure on the low speed control cylinder 55 and permitting fluid to pass through the exhaust port 185 to operate the left-hand jack 17, during operation of the machine at a slow feeding speed.

When it is desired to release pressure from the cylinder 55 the control handle 187 is turned to the left to an intermediate position between an extreme open position and a neutral position. In a like manner, when it is desired to release pressure from the cylinder 56, said control handle is turned to the right to an intermediate position between an extreme position and a neutral position. Thus either cylinder 55 or 56 is charged by moving the control handle 187 in one direction and is discharged by moving said control handle in an opposite direction, and when one cylinder is charged, the other is discharged.

A drain line 194 is connected between the valves 134 and 136 and has connection with the return line 116 leading to the tank 101, to permit fluid leaking by the rotors 175 of said valves to drain back to the tank 101.

The right-hand planetary 31 is operated by either of the valves 124 or 126 in the same manner the left-hand planetary is operated by the valves 134 or 136. When the valve 124 is in a full open position to one side of its neutral position, pressure will pass from the pressure line 123 through a pressure line 144 to the right-hand cylinder 55, to charge said valve and apply the right-hand cylinder 55, to charge said valve and apply the right-hand low speed friction band. When the hand is removed from the control handle for said valve, said control handle and valve will go to a neutral position holding pressure in the pressure line 144 and cylinder 55, but permitting fluid to by-pass through said valve through the pressure line 125, the valve 126 and return to the tank 101, or to operate the right-hand jack 17, upon closing the valve 129, to prevent the return of fluid through said valve.

When the valve 124 is turned to an extreme position in an opposite direction, fluid under pressure will be admitted through said valve from the pressure line 123, through a pressure line 147, to charge the right-hand cylinder 56 and apply the high-speed friction band for the right-hand planetary 31. When the hand is released from the valve control handle, said valve will return to a neutral position to hold pressure in said pressure line 147 and the cylinder 56 and to permit fluid to by-pass from the pressure line 123 through said valve to the return.

Fluid pressure is released from either of said cylinders 55 or 56 by moving the valve control handle in one direction or another to a position between the neutral and full open positions of said valve, as has before been described with reference to the valve 134. Fluid leaking past the rotor of said valve is returned to the tank 101 through a drain line 150.

Since the coil springs 190, 190 return the control handle 187 to a neutral position as soon as the hand is removed therefrom, and since fluid under pressure passes through the valve 124 on one side of the machine, to the associated control valve 126 on the opposite side of the machine to the valve 129, to operate one of the forward jacks 17 or to pass through said valve 129 and return to the tank 101, and since said valves 124 and 126 may at the same time hold pressure on the desired associated high or low speed planetary operating cylinder, the high and low speeds of one planetary 31 can be controlled from the valve 124 on one side of the machine or from the valve 126 on the opposite side of the machine and the asociated jack 17 can be operated during operation of the machine. The valves 134 and 136 being the same as, and being connected together in the same manner as the valves 124 and 126, can thus control operation of the other planetary 31, from either side of the machine. The fluid connections between the valves on opposite sides of the machine are thus so arranged that each valve is supplied with pressure whenever the hand is removed from the control handle of the valve on the opposite side of the machine, thus permitting the associated planetary operating cylinder to be charged or discharged from either side of the machine and permitting operation of the jacket 17, 17 during operation of the machine.

It may be seen from the foregoing that the valves 124, 126, 134 and 136 are so arranged that fluid under pressure may be supplied to operate the jacks 17, 17 when any one of said valves is in a neutral position, holding pressure on an associated high or low speed friction band, thus permitting operation of said jacks while the machine is being positioned for cutting or is being fed across a working place during the cutting operation, and permitting the cutter bar to be readily accommodated to cut out a band of impurities, where the bottom does not conform thereto. It may further be seen that the foregoing arrangement of valves permits the two planetaries to be operated together or independently of each other at either high or low frictionally controlled speeds, and that said valves are so arranged as to prevent the engagement

of the high and low speed friction bands of said planetaries at the same time.

During operation of the machine, when cutting from right to left, it is preferable to train one cable from the right-hand feed drum around and under a sheave 157 mounted on one side of the base 16, adjacent the rear end thereof, and forwardly from said sheave to and around a horizontally disposed sheave 158, on the forward end of said base. From said last named sheave said cable may be trained laterally to the left and secured at its free end to a hook 159 on the lower end of a jack 160, interposed between the mine floor and roof. Cable may also be trained from the left-hand feed drum 23 around a sheave 161 and laterally therefrom to a hook 162 on the upper end of a jack 160*a*, to provide a uniform pull on the upper and lower ends of the machine. Where, however, cutting is relatively soft, it is only necessary to use one feed cable, pulling from the lower portion of the machine.

A retarding drum 163 is provided at the rear end of the motor 13. Said retarding drum is rotatable about an axis extending longitudinally of the machine and is mounted for free rotation with respect thereto. A friction band 164 is provided to engage said drum and retard rotation thereof, to enable said retarding drum to hold back the rear end of the machine in cases where it tends to advance ahead of the forward end of the machine, so as to keep the cutter bar 11 substantially perpendicular to the coal face, or so as to keep the rear end of the machine a slight distance behind the forward end thereof during cutting, to cause the cutter bar to cut across the face at an advance angle.

When the machine has been sumped into the coal face and is in position to cut thereacross, the coal face is engaged by a horizontally extending pivoted deflecting arm 165, vertically pivoted between a pair of spaced lugs 166, 166 projecting forwardly from the forward end of the main frame 10, just beneath the advance side of the cutter bar 11 (see Figure 5). Said arm is provided with a slot 167 engaged by a pin 168, depending from a cuttings collecting chute 169, mounted in the forward end of the main frame 10, for longitudinal slidable movement with respect thereto. Said chute is provided with an upright outer side wall 170 guided at its upper end in a longitudinal guide 171 formed in the forward end of said main frame. A tension spring 172 and flexible cable 173 are provided to engage said deflecting arm with the coal face (see Figures 3 and 5). Said tension spring is connected to the machine frame at one of its ends and has said cable connected to its opposite end. Said cable is secured at the rear end to said spring and extends forwardly therefrom around a sheave 174. From thence, it extends in a rearward direction and is connected at its free end to said chute so as to urge said chute in an outwardly extended position with respect to said main frame. The side wall 170 has a forwardly projecting advance wall portion 175 curved to yieldably engage the coal face, to form an extension of said chute and cause the cuttings discharged from the kerf to be propelled along said cuttings collecting chute by the cutter chain and be discharged to the retreating side of the machine through a cuttings passage 176, formed in the upper side of said main frame and conforming substantially to the path traversed by said cutter chain as it turns around the cutter chain sprocket. The arrangement just described prevents the accumulation of cuttings on the advance side of the machine, thus making it unnecessary to shovel the cuttings from the advance side of the machine as the cutting operation progresses.

While I have herein shown and described one form in which my invention may be embodied, it will be understood that the construction thereof and the arrangement of the various parts may be altered without departing from the spirit and scope thereof. Furthermore, I do not wish to be construed as limiting my invention to the specific embodiment illustrated, excepting as it may be limited in the appended claims.

I claim as my invention:

1. In a kerf-cutting machine of the type adapted to cut a horiontal kerf in a mine wall above the ground, a base slidable on its bottom along a mine bottom, a cutting element including a cutter bar having a cutter chain movable thereabout, means for mounting said cutting element for vertical adjustment with respect to said base and for vertical tilting movement with respect thereto including a plurality of fluid pressure jacks, and a separate fluid pump connected with each of said jacks, for independently supplying fluid under pressure thereto.

2. In a kerf-cutting machine of the type adapted to cut a horizontal kerf in a mine wall above the ground, a base slidable on its bottom along a mine bottom, a cutting element including a cutter bar having a cutter chain movable thereabout, means for mounting said cutting element for vertical adjustment with respect to said base and for vertical tilting movement with respect thereto including a plurality of fluid pressure jacks, a separate fluid pump connected with each of said jacks, and a separate fluid control valve interposed between each pump and jack, for supplying fluid under pressure to said jacks independently of or simultaneously with each other.

3. In a kerf-cutting machine of the type adjustable to cut horizontal kerfs at various elevations with respect to the ground, a base slidable on its bottom along a mine bottom, a cutting element mounted thereon for vertical adjustment with respect thereto and including a cutter bar having a cutter chain movable thereabout, three spaced fluid pressure jacks for mounting said cutting element on said base plate for vertical adjustment with respect thereto, and for tilting movement with respect thereto about transverse or longitudinal axes, and three pumps for selectively supplying fluid under pressure to said jacks, each one of said pumps being associated with one of said jacks, to provide an independent source of supply of fluid pressure thereto.

4. In a kerf-cutting machine of the type adjustable to cut horizontal kerfs at various elevations with respect to the ground, a base slidable on its bottom along a mine bottom, a cutting element mounted thereon for vertical adjustment with respect thereto and including a cutter bar having a cutter chain movable thereabout, three spaced fluid pressure jacks, for mounting said cutting element on said base plate for vertical adjustment with respect thereto, and for tilting movement with respect thereto about transverse or longitudinal axes, three pumps for selectively supplying fluid under pressure to said jacks, each one of said pumps being connected with one of said jacks, to provide an independent source of supply of fluid pressure thereto, and a separate fluid control valve interposed between each pump and jack.

5. In a kerf-cutting machine of the type ad-

justable to cut horizontal kerfs at various elevations with respect to the ground, a base slidable on its bottom along a mine bottom, a cutting element mounted thereon for vertical adjustment with respect thereto and including a cutter bar having a cutter chain movable thereabout, three spaced fluid pressure jacks for mounting said cutting element on said base plate for vertical adjustment with respect thereto, and for tilting movement with respect thereto about transverse or longitudinal axes, two of said jacks being at opposite sides of the forward end of said cutting element, and the third of said jacks being at the central part of the rear end of said cutting element, and all of said jacks being mounted on said base for limited pivotal movement with respect thereto about their lower ends, and three pumps for selectively supplying fluid under pressure to said jacks, each one of said pumps being associated with one of said jacks, to provide an independent source of supply of fluid pressure thereto.

6. In a kerf-cutting machine of the type adapted to cut horizontal kerfs at various elevations with respect to the ground, a base slidable on its bottom along a mine bottom, a cutting element mounted thereon for vertical adjustment with respect thereto and including a cutter bar having a cutter chain movable thereabout, three spaced fluid pressure jacks for mounting said cutting element on said base plate for vertical adjustment with respect thereto, and for tilting movement with respect thereto about transverse or longitudinal axes, two of said jacks being at opposite sides of the forward end of said cutting element, and the third of said jacks being at the central part of the rear end of said cutting element, and all of said jacks being mounted on said base for limited pivotal movement with respect thereto about their lower ends, three pumps for selectively supplying fluid under pressure to said jacks, each one of said pumps being connected with one of said jacks, to provide an independent source of supply of fluid pressure thereto, and a separate independently operable fluid control valve interposed between each pump and jack, said valves being normally positioned to by-pass fluid to the low pressure sides of said pumps, and being operative to supply fluid under pressure to said jacks by closing the by-pass lines to the low pressure sides of said pumps.

7. In a kerf-cutting machine of the type adapted to cut horizontal kerfs at various elevations with respect to the ground, a base slidable on its bottom along a mine bottom, a cutting element mounted thereon for vertical adjustment with respect thereto and including a cutter bar having a cutter chain movable thereabout, a pair of independently operable feed drums for feeding said cutter bar into and across a coal face, a separate planetary geared reduction device connected with each of said feed drums for independently driving said feed drums, fluid pressure means for controlling operation of said planetaries, a plurality of fluid pressure jacks for mounting said cutting element on said base for vertical adjustment and for tilting movement with respect thereto, and means for supplying fluid under pressure to said control means for said planetaries, to permit independent operation of said planetaries, and for independently supplying fluid under pressure to said jacks permitting independent operation of said jacks including a plurality of fluid pumps, each one of said pumps being connected to one of said jacks, for supplying fluid under pressure thereto, and two of said pumps being connected with said control means for said planetaries, for supplying fluid under pressure thereto and for holding pressure thereon while said jacks are being operated or are in stationary positions.

8. In a kerf-cutting machine of the type adapted to cut horizontal kerfs at various elevations with respect to the ground, a base slidable on its bottom along a mine bottom, a cutting element mounted thereon for vertical adjustment with respect thereto and including a cutter bar having a cutter chain movable thereabout, means for feeding said cutter bar into and across a coal face including a pair of independently operable feed drums, a separate plural speed planetary geared reduction device for each of said feed drums, for independently driving said drums at a plurality of predetermined frictionally controlled speeds, fluid pressure means for controlling operation of said planetaries, three spaced fluid pressure jacks for mounting said cutting element on said base for vertical adjustment with respect thereto and for tilting movement with respect thereto about a plurality of transverse and longitudinal axes, and three pumps for selectively supplying fluid under pressure to said jacks, each one of said pumps being connected to one of said jacks to afford an independent source of supply of fluid pressure thereto, and two of said pumps being connected to the control means for said planetaries for supplying fluid under pressure thereto.

9. In a kerf-cutting machine of the type adapted to cut horizontal kerfs at various elevations with respect to the ground, a base slidable on its bottom along a mine bottom, a cutting element mounted thereon for vertical adjustment with respect thereto and including a cutter bar having a cutter chain movable thereabout, means for feeding said cutter bar into and across a coal face including a pair of independently operable feed drums, a separate plural speed planetary geared reduction device associated with each of said feed drums, for independently driving said drums at a plurality of predetermined frictionally controlled speeds, fluid pressure means for controlling operation of said planetaries, three spaced fluid pressure jacks for mounting said cutting element on said base for vertical adjustment with respect thereto and for tilting movement with respect thereto about a plurality of transverse or longitudinal axes, three pumps for selectively supplying fluid under pressure to said jacks, each one of said pumps being connected to one of said jacks to afford an independent source of supply of fluid pressure thereto, two of said pumps also being connected to the control means for said planetaries, for independently supplying fluid under pressure thereto, and the connection from said two pumps to two of said jacks including a pair of fluid valves adapted to control operation of said fluid pressure control means for said planetaries.

10. In a kerf-cutting machine of the type adapted to cut horizontal kerfs at various elevations with respect to the ground, a base slidable on its bottom along a mine bottom, a cutting element mounted thereon for vertical adjustment with respect thereto and including a cutter bar having a cutter chain movable thereabout, means for feeding said cutter bar into and across a coal face including a pair of independently operable feed drums, a separate plural speed planetary

geared reduction device associated with each of said feed drums, for independently driving said drums at a plurality of predetermined frictionally controlled speeds, fluid pressure means for controlling operation of said planetaries, three spaced fluid pressure jacks for mounting said cutting element on said base for vertical adjustment with respect thereto and for tilting movement with respect thereto about a plurality of transverse or longitudinal axes, three pumps for selectively supplying fluid under pressure to said jacks, each one of said pumps being connected to one of said jacks, to afford an independent source of supply of fluid under pressure thereto, two of said pumps also being connected to the control means for said planetaries, for independently supplying fluid under pressure thereto, the connection from said two pumps to two of said jacks being adapted to supply fluid under pressure to said control means for said planetaries and including a pair of fluid valves adapted to control operation of said planetaries, and the return from said valves including a pair of valves for controlling operation of said fluid jacks.

11. In a fluid control system particularly adapted to elevate and tilt a cutter bar of a kerf-cutting machine of the type adapted to be slidably movable along a mine bottom on its own bottom during the cutting operation, a plurality of fluid jacks arranged to elevate and tilt the kerf-cutting machine cutter bar, a separate fluid pump for each of said jacks providing an independent source of supply of fluid under pressure to each jack, and a separate control valve associated with each pump and jack for independently controlling the admission and release of fluid under pressure to said jacks, said valves also serving to return fluid to the low pressure sides of said pumps and to release fluid pressure from said jacks while said pumps are in operation.

12. In a fluid control system particularly adapted to elevate and tilt a cutter bar of a kerf-cutting machine of the type adapted to be slidably movable along a mine bottom on its own bottom during the cutting operation, a plurality of fluid jacks arranged to elevate and tilt the kerf-cutting machine cutter bar, a separate fluid pump for each of said jacks providing an independent source of supply of fluid under pressure to each jack, a separate control valve associated with each pump and jack for independently controlling the admission and release of fluid under pressure to said jacks, said valves normally being connected to return fluid to the low pressure sides of said pumps, but being operable to close the return passageway to supply fluid under pressure to said jacks and to release fluid from said jacks while said pumps are in operation, and check valves in the pressure lines leading to said jacks, said check valves being adapted to maintain fluid under pressure in said jacks when said control valves are normally open to the return.

13. In a fluid control system for controlling operation of a kerf-cutting machine of the type having a projecting cutter chain carrying cutter bar adapted to cut horizontal kerfs at various elevations with respect to the ground while slidably moving along the ground on its own bottom, and having flexible feeding means for feeding said cutter bar across a coal face and a plurality of fluid pressure jacks for supporting and elevating and tilting said cutter bar, a separate fluid pump for each of said jacks providing an independent source of fluid under pressure to each jack, fluid pressure control means for controlling operation of said feeding means, and the connections from two of said pumps to two of said jacks including control valves for controlling operation of said fluid pressure control means for said feeding means.

14. In a fluid control system for controlling operation of a kerf-cutting machine of the type having a projecting cutter chain carrying cutter bar adapted to cut horizontal kerfs at various elevations with respect to the ground while slidably moving along the ground on its own bottom, and having flexible feeding means for feeding said cutter bar across a coal face and a plurality of fluid pressure jacks for supporting and elevating and tilting said cutter bar, a separate fluid pump for each of said jacks providing an independent source of fluid under pressure to each jack, fluid pressure control means for controlling operation of said feeding means, the fluid connections to two of said jacks including a pair of control valves for controlling operation of said fluid pressure control means for said feeding means, and a pair of control valves for said jacks serving as a return for fluid supplied by said pumps.

15. In a fluid control system for controlling operation of a kerf-cutting machine of the type having a projecting cutter chain carrying cutter bar adapted to cut horizontal kerfs at various elevations with respect to the ground while slidably moving along the ground on its own bottom, and having flexible feeding means for feeding said cutter bar across a coal face and a plurality of fluid pressure jacks for supporting and elevating and tilting said cutter bar, a separate fluid pump for each of said jacks providing an independent source of fluid under pressure to each jack, fluid pressure control means for controlling operation of said feeding means, and the fluid connections to two of said jacks including a pair of control valves for controlling operation of said fluid pressure control means for said feeding means and a pair of control valves for said jacks, said last mentioned valves normally serving to return fluid to the low pressure sides of said pumps and to release fluid pressure from said jacks while said pumps are in operation.

16. In a fluid control system for controlling operation of a kerf-cutting machine of the type having a projecting cutter chain carrying cutter bar adapted to cut horizontal kerfs at various elevations with respect to the ground while slidably moving along the ground on its own bottom, and having flexible feeding means for feeding said cutter bar across a coal face and a plurality of fluid pressure jacks for supporting and elevating and tilting said cutter bar, a separate fluid pump for each of said jacks providing an independent source of fluid under pressure to each jack, fluid pressure control means for controlling operation of said feeding means, the fluid connections to two of said jacks including a pair of control valves for controlling operation of said fluid pressure control means for said feeding means and a pair of control valves for said jacks, said last mentioned valves normally serving to return fluid to the low pressure sides of said pumps and to release fluid pressure from said jacks while said pumps are in operation, and check valves in the pressure lines leading to said jacks, said check valves being adapted to maintain fluid under pressure in said jacks when said control valves are normally open to the return.

17. In a fluid control system for controlling operation of a kerf-cutting machine of the type having a projecting cutter chain carrying cutter bar adapted to cut horizontal kerfs at various elevations with respect to the ground while slidably moving along the ground on its own bottom, and having flexible feeding means for feeding said cutter bar across a coal face and a plurality of fluid pressure jacks for supporting and elevating and tilting said cutter bar, a separate fluid pump for each of said jacks providing an independent source of fluid under pressure to each jack, fluid pressure control means for controlling operation of said feeding means, the fluid connections to two of said jacks including two pairs of control valves for controlling operation of said fluid pressure control means for said feeding means, a pair of control valves for said jacks serving to control operation of said jacks and serving as a return for fluid supplied by said pumps, and one valve of each of said pairs of feed control valves being connected in series with said jack control valves and adapted to operate said control means for said feeding means and serve as passageways for fluid to said jacks and to the low pressure return through said jack control valves.

18. In a fluid control system for controlling operation of a kerf-cutting machine of the type having a projecting cutter chain carrying cutter bar adapted to cut horizontal kerfs at various elevations with respect to the ground while slidably moving along the ground on its own bottom, and having flexible feeding means for feeding said cutter bar across a coal face and a plurality of fluid pressure jacks for supporting and elevating and tilting said cutter bar, a separate fluid pump for each of said jacks providing an independent source of fluid under pressure to each jack, fluid pressure control means for controlling operation of said feeding means, the fluid connections to two of said jacks including a pair of control valves for controlling operation of said fluid pressure control means for said feeding means, said valves being movable to one position to supply fluid under pressure to said control means for said feeding means, and being automatically movable to a neutral position to hold pressure on the desired control means for said feeding means and to by-pass fluid under pressure through said valves to said jacks, to permit operation of said jacks during operation of said feeding means.

19. In a fluid control system for controlling operation of a kerf-cutting machine of the type having a projecting cutter chain carrying cutter bar adapted to cut horizontal kerfs at various elevations with respect to the ground while slidably moving along the ground on its own bottom, and having flexible feeding means for feeding said cutter bar across a coal face and a plurality of fluid pressure jacks for supporting and elevating and tilting said cutter bar, a separate fluid pump for each of said jacks providing an independent source of fluid under pressure to each jack, fluid pressure control means for controlling operation of said feeding means, the fluid connections to two of said jacks including a pair of control valves for controlling operation of said fluid pressure control means for said feeding means, a control valve for each of said jacks, each of said control valves serving as a return for fluid supplied by an associated pump, and said control valves for said control means for said feeding means being movable to one position to supply fluid under pressure to said control means for said feeding means and being automatically movable to a neutral position to hold pressure on the desired control means for said feeding means and to by-pass fluid under pressure to said control valves for said jacks, to permit said jack control valves to supply fluid pressure to said associated jacks by closing the passage of fluid to the return.

20. In a fluid control system for controlling operation of a kerf-cutting machine of the type having a projecting cutter chain carrying cutter bar adapted to cut horizontal kerfs at various elevations with respect to the ground while slidably moving along the ground on its own bottom, and having flexible feeding means for feeding said cutter bar across a coal face and a plurality of fluid pressure jacks for supporting and elevating and tilting said cutter bar, a separate fluid pump for each of said jacks providing an independent source of fluid under pressure to each jack, fluid pressure control means for controlling operation of said feeding means, the fluid connections to two of said jacks including a pair of control valves for controlling operation of said fluid pressure control means for said feeding means, a control valve for each of said jacks, each of said control valves serving as a return for fluid supplied by an associated pump, and said control valves for said control means for said feeding means being movable to one position to supply fluid under pressure to said control means for said feeding means and being automatically movable to a neutral position to hold pressure on the desired control means for said feeding means and to by-pass fluid under pressure to said control valves for said jacks, to permit said jack control valves to supply fluid pressure to said associated jacks by closing the passage of fluid to the return, and check valves in the pressure lines leading to said jacks, said check valves being adapted to maintain fluid in said jacks, when said jack control valves are normally open to the return.

21. In a kerf-cutting machine, a base, a cutting element including a cutter bar having a cutter chain movable thereabout, means for mounting said cutting element for vertical adjustment with respect to said base and for vertical tilting movement with respect thereto including a plurality of fluid pressure jacks, a separate fluid pump connected with each of said jacks, and a separate fluid control valve for each of said jacks, for supplying fluid under pressure to said jacks independently of or simultaneously with each other, said valves being normally positioned to by-pass fluid to the low pressure sides of said pumps, and being operative to supply fluid under pressure to said jacks by closing the by-pass lines to the low pressure sides of said pumps.

WILLIAM W. SLOANE.