Feb. 21, 1967 J. JURNÝ 3,304,863

INK ROLLER SEPARATING MEANS

Filed Nov. 4, 1964 2 Sheets-Sheet 1

Fig. 1.

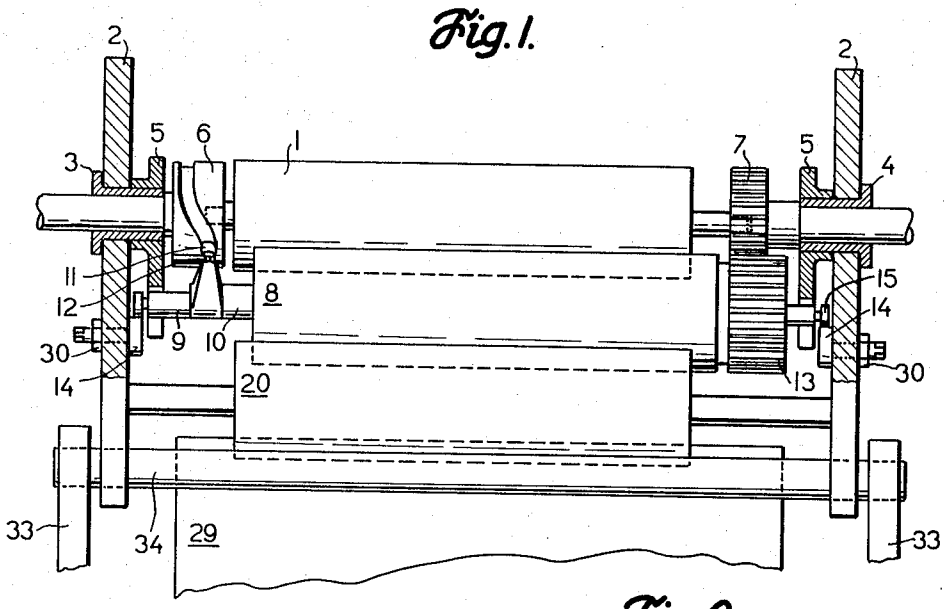

Fig. 2.

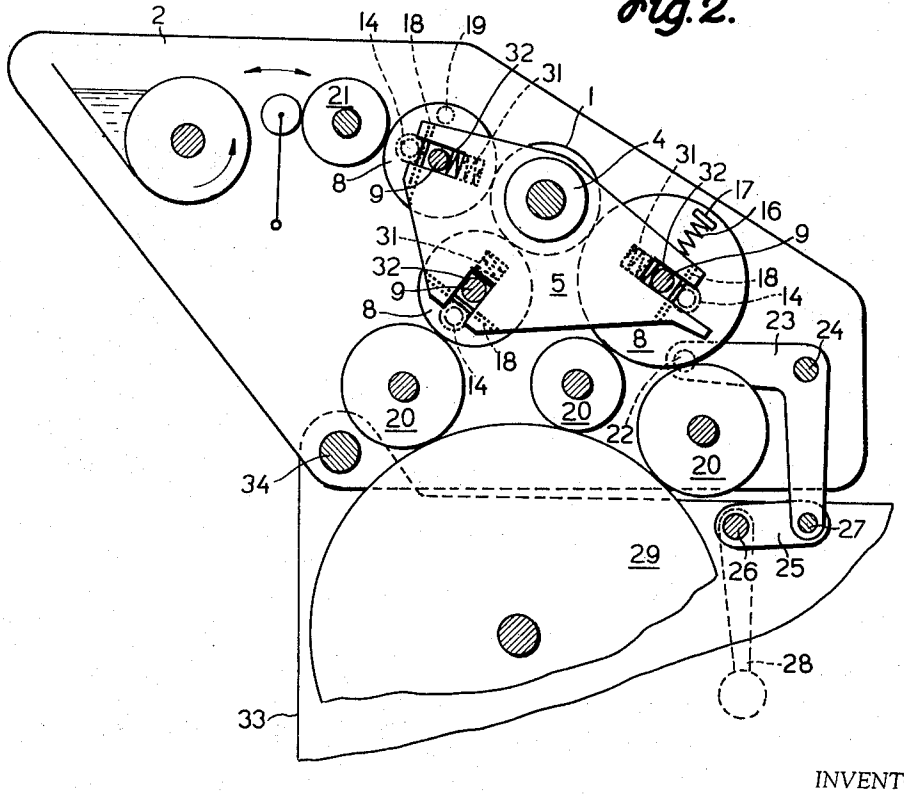

INVENTOR.
Josef Jurný
BY Richard Crowd
Ag't

Feb. 21, 1967 J. JURNÝ 3,304,863

INK ROLLER SEPARATING MEANS

Filed Nov. 4, 1964 2 Sheets-Sheet 2

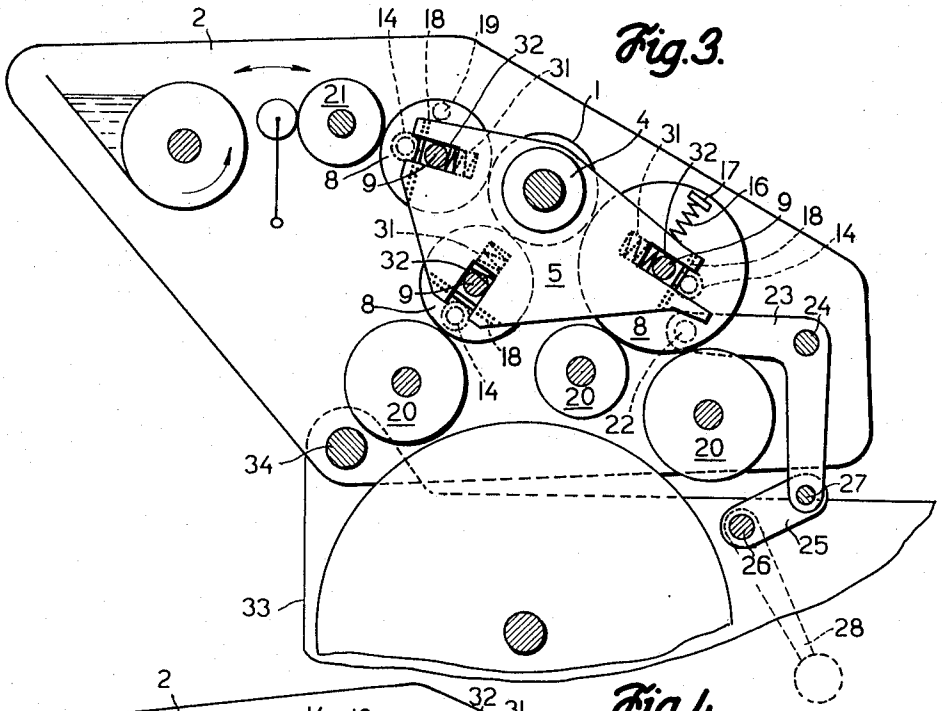

Fig. 3.

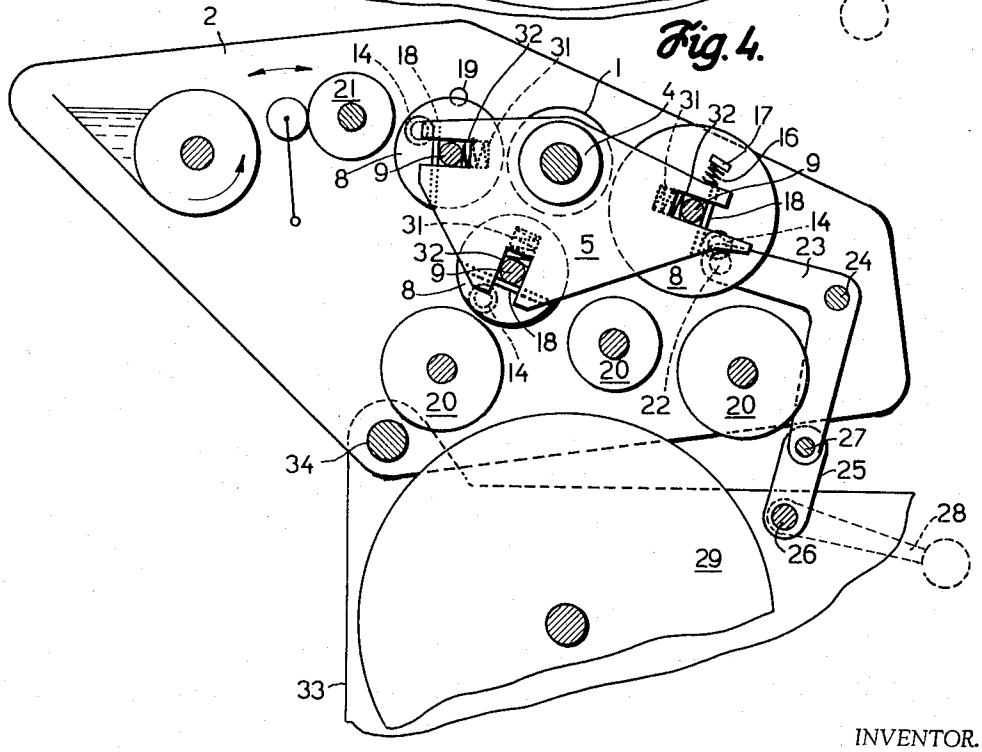

Fig. 4.

INVENTOR.
Josef Jurný
BY Richard Gross
Ag't

United States Patent Office 3,304,863 Patented Feb. 21, 1967

3,304,863

INK ROLLER SEPARATING MEANS

Josef Jurný, Sebranice u Kunstatu, Czechoslovakia, assignor to Adamovské strojírny, národní podnik, Adamov, Czechoslovakia

Filed Nov. 4, 1964, Ser. No. 408,860
8 Claims. (Cl. 101—351)

The invention relates to the dyeing or inking device of printing machines, more particularly to the constructional arrangement of the rubbing-down rollers in the inking apparatus of an offset printing press.

The inking devices of printing machines consist of a system of rollers for transferring in the best possible manner the printing dye or ink and to apply a layer of the dye evenly on the printing form. The device includes pivoted rubber and metal rollers which are mutually in contact while rotating. The printing ink is transferred by the axial movement of the metal rollers, and the ink is then rolled upon the printing form by rubber spreader rollers. The rollers of the inking device must therefore be accurately positioned with regard to each other and their position must be easily adjustable so as to permit to achieve the necessary pressure between the rollers. It should also be possible to relieve the produced pressure between the rollers when the printing machine is idle. This is necessary to avoid deformation of the rubber roller during the rest period of the printing machine or press. Deformation of the rubber rollers would result in a non-uniform layer of the transferred ink and this would cause uneven inking of the print.

Known inking devices of offset printing presses are therefore equipped with various mechanical devices for removing the metal transfer rollers from the rubber spreader rollers. These devices are usually designed so that the bearings of the transfer rollers are firmly mounted in grooves. These grooves must be designed so as to permit a change in the pressure and also to permit easy removal of the rollers. After a printing job is finished, the various rubber rollers must be disengaged from the pressure position either by swinging away the holders of the roller bearings individually, so that each roller is individually disengaged from the pressure position, or—as is the case in some of these devices—the respective rollers are removed from their holders and placed aside in auxiliary suspensions. This step must of course be taken after interruption of printing and this prolongs the preparatory time necessary for operation of the machine and reduces the capacity thereof.

The necessary pressure between the various rollers are also adjusted by various mechanisms which are rather intricate, and the adjustment is difficult. The transfer rollers are driven by various interposed driving gears. The axial movements of the transfer rollers are derived from variously arranged eccentrics, and by means of a system of two-armed levers the movement is imparted to the transfer rollers.

It is a general object of this invention to eliminate the above mentioned drawbacks of the known state of art. Stated briefly but more specifically, the invention resides in the fact that the transfer mechanism which is located in the central portion and which comprises transfer rollers and a distributing roller, is arranged in auxiliary side pieces which are positioned in separate side pieces of the inking device and which can be rotated around the shaft of the distributing roller.

The invention will be best understood from the following specification to be read in conjunction with the accompanying drawings illustrating schematically a preferred example of embodiment.

In the drawings:

FIG. 1 is a partial section and partial elevation of the inking device in accordance with the invention;

FIG. 2 is a side elevation where the rollers of the inking device are mutually in pressure contact;

FIG. 3 illustrates a side elevation where the transfer rollers are still in pressure contact, while the form rollers have already been removed from pressure contact with the small offset plate cylinder; and

FIG. 4 illustrates a side elevation where all rollers have already been separated from each other.

Referring now more particularly to the accompanying figures, it is seen that the inking device in accordance with the invention consists of primary side pieces **2** of the inking device which are pivoted on the shaft **34**. In one of the side pieces is mounted a sleeve **3** in which rotates the shaft of a cam **6**, and in the axis of this cam is journalled the shaft of the distributing roller **1**. The other end of the shaft of the distributing roller **1** rotates in the axis of a toothed wheel **7** which is turnable in a sleeve **4** attached to the right side piece **2** of FIG. 1. On the surface of the sleeves **3** and **4** are pivoted auxiliary side pieces **5** formed with notches **32** in which are placed the shafts **9** of the ink transfer rollers **8**. To one end of these rollers **8** are attached toothed wheels **13**, and to each of their other ends is attached a sleeve **10** with rollers **11** pivoted on pins **12**. On the ends of the shafts **9** of the rollers **8** are rotatably mounted rollers **15** which are in contact with eccentric pins **14** mounted in the side pieces **2** and which are secured against rotation by means of nuts **30**. The auxiliary side pieces **5** are pressed against stops **19**, carried by the side pieces **2**, by spring **16** which abut against stops **17**. The notches **32** of the auxiliary side pieces **5** are closed by means of plugs against which the springs **31** press the shafts **9** of the transfer rollers **8**. In the side pieces **2** are also mounted the form rollers **20** and the feed roller **21**. The two-armed levers **23** which are pivoted on the shaft **24** and held in the side pieces **2** are provided on one of their ends with stops **22**, and on their other end with pins **27** located in levers **25** attached to the shaft **26** which is journalled in the side pieces **33** of the machine. To the shaft **26** is attached a manually operable lever **28**.

The device in accordance with the invention operates in the following manner:

The rotary movement is supplied to the shaft of the toothed wheel **7** which engages simultaneously with three toothed wheels **13** which serve for driving the ink-transferring rollers **8**. The rotary movement is also supplied to the shaft of the cam **6**. By means of the rollers **11** which are received in the groove of the cam **6** and are rotatable on the pins **12** which are attached to the sleeves **10**, rotation of the cam **6** causes an axial movement of the transfer rollers **8**. If it is necessary to remove the rollers of the ink transfer mechanism from the working pressure contact with the feed roller **21**, the form rollers **20** and the distributing roller **1**, the auxiliary side pieces **5** are swung around the shaft of the distributing roller **1** by means of the lever **28** and the lever mechanism **26**, **25**, **27**, **24**, **23** and **22** which causes the rollers **8** to move along, and their axes are deflected to such an extent that the rollers **15** are moved away from the eccentric pins **14** and the springs **31** press the rollers **8** away from the distributing roller **1**, and the shafts **9** of the rollers **8** are seated on the pins **18**. This deflection causes also removal of the rollers **8** from the form rollers **20** and the feed roller **21**. It is seen that a single movement of the lever **28** removes all eight rollers from the working pressure, and vice versa it brings all eight rollers into the working pressure contact. Adjustment of the required pressures between the rollers **8** and the distributing roller **1** is ac-

complished by rotation of the eccentric pins 14. Adjustment of the required pressures between the form rollers 20, the rollers 8 and the offset plate cylinder 29 is accomplished by special non-illustrated mechanisms.

The advantages of the device in accordance with the invention resides in the fact that the rollers 8 are grouped in such a manner that if the side pieces, and thus also the rollers 8 are rotated about the distributing roller, the various rollers are simultaneously moved away from each other. This arrangement permits also to drive the rollers 8 by means of one toothed wheel arranged on the axis of the distributing roller, and the axial movement of the rollers 8 is made possible by a single cam without any further transmission or lever mechanism, the axis of this cam coinciding with the axis of the distributing roller.

Thus, it will be seen that with the structure of the invention the frame means 33 of the machine supports the plate cylinder 29 for rotary movement, and this frame means 33 carries the pivot means 34 which serves to connect the pair of primary side pieces 2 to the frame means 33 for turning movement with respect thereto about the common axis which coincides with the axis of the pivot 34. The primary side pieces 2 support the ink distributing roller 1 for rotary movement, and the pair of secondary side pieces 5 are supported for rotary movement about the shaft of the ink distributing roller 1. The spring means 16 urges the secondary side piece 5 against the stop means formed by the stops 19 and carried by the primary side pieces 2, in the normal operating position of the press, and these side pieces 5 are formed with the notches 32 which receive the shafts 9 of the ink-transfer rollers 8. The primary side pieces 2 also support the form rollers 20 for rotary movement, and in addition they support the feed roller 21 for rotary movement. All of these rollers are, of course, parallel to each other. The manually operable lever means 22–28 serves, when it is actuated by the operator, to turn the primary side pieces 2 about the pivot means 34 so as to displace the form rollers 20 away from the plate cylinder 29, and in addition the actuation of the manual operable lever means 22–28 serves to turn the secondary side pieces 5 with respect to the primary side pieces 2 about the axis of the ink-distributing roller 1 so as to displace the ink-transfer rollers 8 to locations where on the one hand they are out of engagement with the rollers 20 and 21 and where on the other hand the spring means 31 is capable of displacing these rollers 8 away from the distributing roller 1. Lever 23 forms a bell crank lever means having one arm for engaging the secondary side pieces 5, and a second arm extending toward frame means 33 and connected with manually turnable lever means 25 to form a toggle linkage therewith.

I claim:

1. In a printing press, frame means, a rotary plate cylinder supported for rotary movement by said frame means, pivot means carried by said frame means, a pair of primary side pieces pivotally carried by said pivot means for turning movement with respect to said frame means about a common axis defined by said pivot means, an ink-distributing roller supported for rotary movement by said primary side pieces, said ink-distributing roller having a shaft fixed coaxially thereto, a pair of secondary side pieces supported for turning movement by said shaft of said distributing roller, said secondary side pieces each being formed with at least one notch, at least one form roller supported for rotary movement by said primary side pieces and engaging said plate cylinder when said primary side pieces are in a normal operating position, at least one ink-transfer roller situated between and engaging said distributing roller and said form roller when said primary side pieces are in their normal operating position, stop means carried by said primary side pieces, first spring means urging said secondary side pieces into engagement with said stop means, when said primary side pieces are in their normal operating position, for situating said transfer roller in engagement with said distributing and form rollers, second spring means urging said transfer roller away from said distributing roller, and lever means carried by said frame means and operatively connected to said primary side pieces for turning the latter with respect to said frame means about said pivot means away from said operating position to a location where said form roller is spaced from said plate cylinder, said lever means also coacting with said secondary side pieces for turning the latter about said shaft of said distributing roller in opposition to said first spring means away from said stop means to a location where said transfer roller is displaced away from said form roller releasing said second spring means to displace said transfer roller also away from said distributing roller, so that said lever means may be actuated to displace said primary side pieces away from their normal operating position to said location where all of said rollers are out of engagement with each other.

2. The combination of claim 1 and wherein a pair of eccentric pins are carried by said primary side pieces and coact with said shaft of said transfer roller for adjusting the pressure between the latter and said distributing roller.

3. The combination of claim 1 and wherein a feed roller is supported for rotary movement by said primary side pieces and an additional transfer roller is situated in the normal operating position of said side pieces between and in engagement with said feed roller and distributing roller for transferring ink from said feed roller to said distributing roller, said additional transfer roller having a shaft and said secondary side pieces being formed with notches receiving the latter shaft, and additional spring means acting on said additional transfer roller to urge the latter away from said distributing roller, said lever means when actuated to displace said form roller away from said plate cylinder also acting on said secondary side pieces to displace said additional transfer roller away from said feed roller and to release said additional spring means to displace said additional transfer roller away from said distributing roller, so that when said primary side pieces are displaced from their normal operating positions said additional transfer roller is also out of engagement with said feed roller and distributing roller.

4. The combination of claim 3 and wherein a plurality of form rollers are supported for rotary movement by said primary side pieces and engage said plate cylinder in the normal operating position of said primary side pieces, said secondary side pieces being respectively formed with a plurality of said notches and a plurality of said transfer rollers respectively having shafts located in said notches, a plurality of second spring means acting on said plurality of transfer rollers for urging the latter away from said distributing roller, all of said transfer rollers engaging said distributing roller in the normal operating position of said side pieces and said plurality of transfer rollers engaging said form rollers in the normal operating position of said side pieces, whereby when said lever means is actuated to displace said form rollers away from said plate cylinder all of said transfer rollers are situated at a location spaced not only from said form rollers but also from said distributing roller.

5. The combination of claim 4 and wherein said lever means is manually operable.

6. The combination of claim 4 and wherein a gear is mounted on said distributing roller shaft for rotary movement therewith, said ink-transfer rollers all respectively carrying gears which mesh with said gear carried by said ink distributing roller, so that all of said transfer rollers are driven from said distributing roller.

7. The combination of claim 4 and wherein a single cam means is carried by said distributing roller to be actuated thereby and coacts with all of said transfer rollers for axially reciprocating the latter during rotary movement of said distributing roller.

8. In a printing press, frame means, a rotary plate

cylinder supported for rotary movement by said frame means, pivot means carried by said frame means, a pair of primary side pieces supported for turning movement by said pivot means about a common pivot axis defined by said pivot means, a rotary ink-distributing roller supported by said primary side pieces for turning movement and having a shaft, a pair of secondary side pieces supported for turning movement by said shaft, said secondary side pieces being respectively formed with notches, stop means carried by said primary side pieces, first spring means engaging said secondary side pieces and urging them against said stop means, a form roller supported for rotary movement by said primary side pieces and engaging said plate cylinder in a normal operating position of said primary side pieces, an ink-transfer roller having a shaft situated in said notches and engaging both said distributing roller and said form roller in the normal operating position of said primary side pieces, second spring means acting on said transfer roller to urge the latter away from said distributing roller, a bell-crank lever means turnably carried by said primary side pieces and having one arm for engaging said secondary side pieces to turn the latter in opposition to said first spring means away from said stop means, said bell-crank lever means having a second arm extending toward said frame means, and a manually turnable lever turnably carried by said frame means and having an arm pivotally connected to

said second arm of said bell-crank lever means and forming a toggle linkage mechanism therewith, said manually turnable lever when actuated by the operator expanding the toggle linkage mechanism to displace said primary side pieces about said pivot means to a location situating said form roller away from said plate cylinder, and said one arm of said bell-crank lever means then acting on said secondary side pieces to turn the latter away from said stop means, thus displacing said transfer roller away from said form roller and releasing said second spring means to displace said transfer roller away from said distributing roller.

References Cited by the Examiner

UNITED STATES PATENTS

590,002	9/1897	Crane	101—50
621,893	3/1899	Boulard	101—35
638,747	12/1899	North	101—344
1,730,711	10/1929	Wood.	
2,594,214	4/1952	Ras.	
2,751,843	6/1956	Faeber	101—352 X
3,230,877	1/1966	Birk	101—351

ROBERT E. PULFREY, *Primary Examiner.*

H. P. EWELL, *Assistant Examiner.*