US00D686367S

(12) United States Design Patent

Ruiz, Sr. et al.

(10) Patent No.: US D686,367 S

(45) Date of Patent: ** Jul. 16, 2013

(54) **DISPENSING APPLICATOR WITH A FLOCKED TIP**

(71) Applicant: **Adhezion Biomedical, LLC**, Wyomissing, PA (US)

(72) Inventors: **Rafael Ruiz, Sr.**, Hudson, NC (US); **Sheng Zhang**, Hickory, NC (US); **Martin Krauss**, Fort Myers, FL (US)

(73) Assignee: **Adhezion Biomedical, LLC**, Wyomissing, PA (US)

(**) Term: **14 Years**

(21) Appl. No.: **29/436,183**

(22) Filed: **Nov. 2, 2012**

(51) **LOC (9) Cl.** **28-02**

(52) **U.S. Cl.**
USPC **D28/7**

(58) **Field of Classification Search**
USPC D28/7, 8, 20–22, 30–31, 76, 85, D28/99; 132/108, 202, 208, 317.32; 401/202–207, 261–267; D4/132–135; D24/119
See application file for complete search history.

(56) **References Cited**

U.S. PATENT DOCUMENTS

5,636,931 A * 6/1997 Gueret 401/126
D414,688 S * 10/1999 Loeb et al. D9/697
D418,246 S * 12/1999 Turri D28/7
6,010,266 A * 1/2000 Schrepf 401/126
6,526,992 B2 * 3/2003 Bouix 132/318
D537,564 S * 2/2007 Montoli D28/7
D538,975 S * 3/2007 Montoli D28/7
D617,045 S * 6/2010 Uehara et al. D28/7
7,785,026 B2 * 8/2010 Eng et al. 401/37
D633,650 S * 3/2011 Uehara et al. D28/7
D671,260 S * 11/2012 Pires et al. D28/7

* cited by examiner

Primary Examiner — Zenia Bennett

(74) *Attorney, Agent, or Firm* — Stradley Ronon Stevens & Young, LLP

(57) **CLAIM**

The ornamental design for a dispensing applicator with a flocked tip, substantially as shown and described.

DESCRIPTION

FIG. **1** is a perspective view of the ornamental design for the dispensing applicator;
FIG. **2** is a front view of the ornamental design for the dispensing applicator;
FIG. **3** is a rear view of the ornamental design for the dispensing applicator;
FIG. **4** is a top view of the ornamental design for the dispensing applicator;
FIG. **5** is a bottom view of the ornamental design for the dispensing applicator;
FIG. **6** is a side view of the ornamental design for the dispensing applicator; and,
FIG. **7** is another side view of the ornamental design for the dispensing applicator.

1 Claim, 2 Drawing Sheets

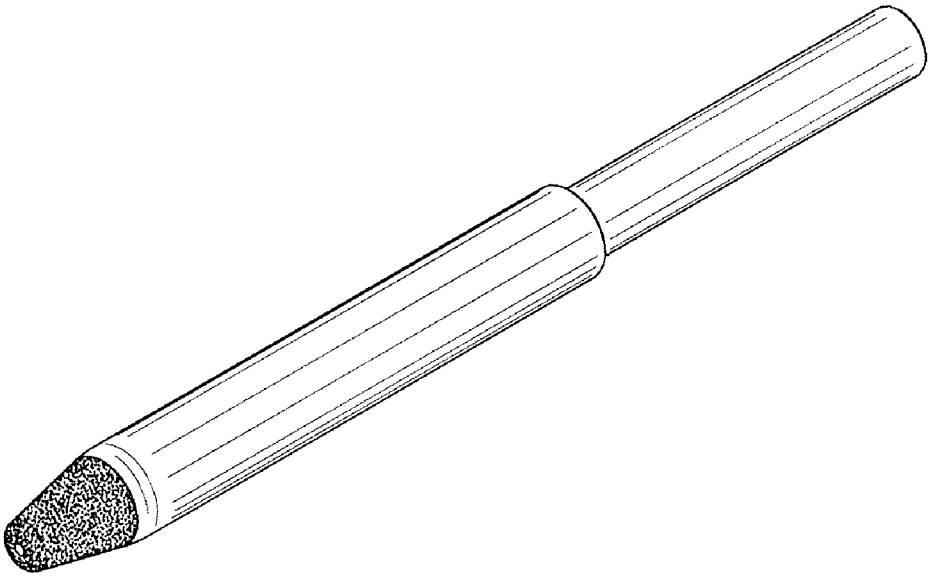

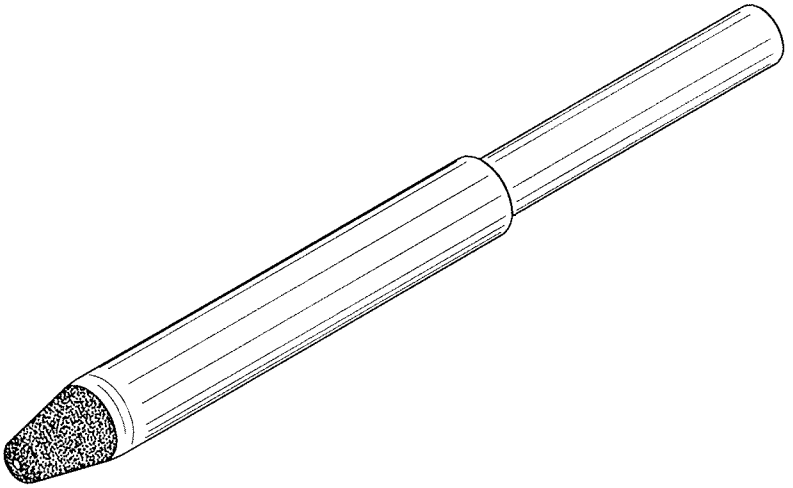

FIG. 1

FIG. 2

FIG. 3

FIG. 4

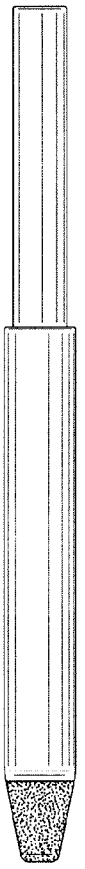

FIG. 5

FIG. 6

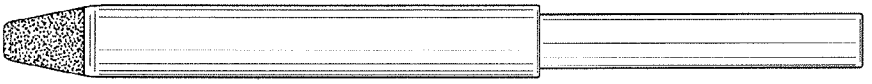

FIG. 7