Jan. 17, 1961 R. E. ZOLLER 2,968,289

VAPOR GENERATING UNIT

Filed Oct. 29, 1958

2 Sheets-Sheet 1

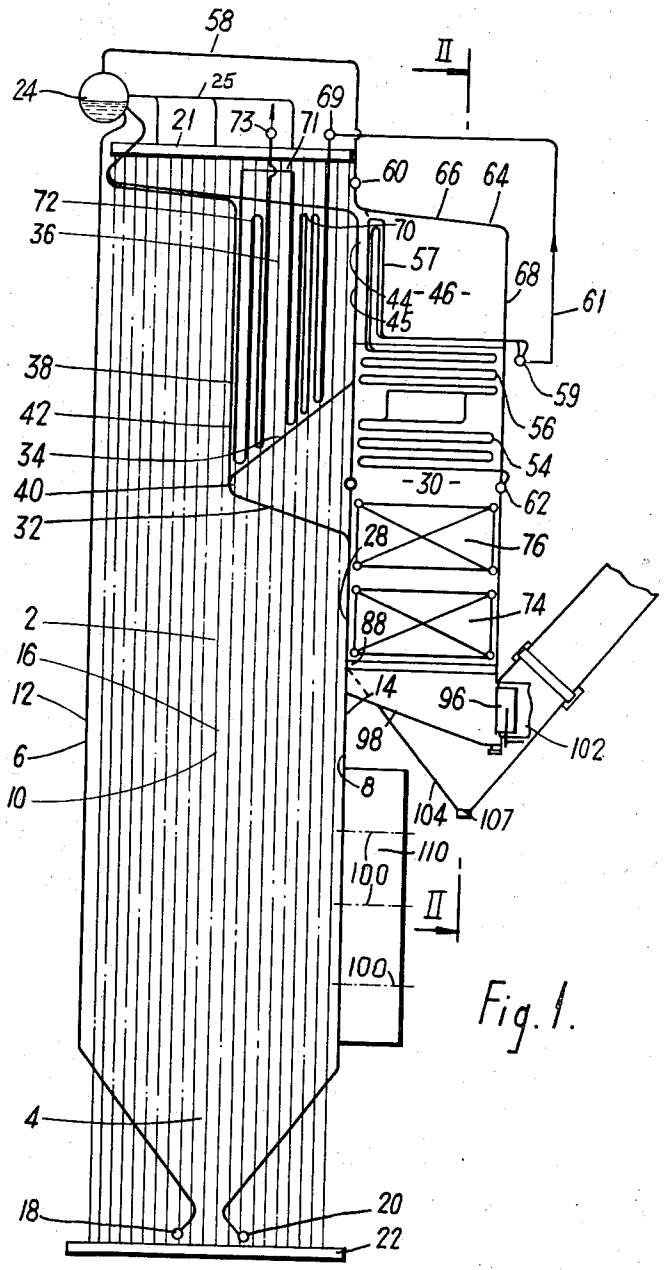

Fig. 1.

INVENTOR.
Ronald E. Zoller

BY J. P. Moran

ATTORNEY

Jan. 17, 1961 R. E. ZOLLER 2,968,289

VAPOR GENERATING UNIT

Filed Oct. 29, 1958

2 Sheets-Sheet 2

Fig. 2.

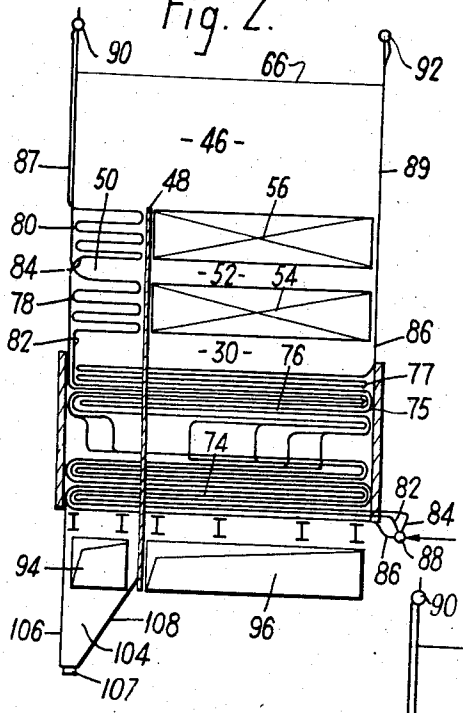

Fig. 3.

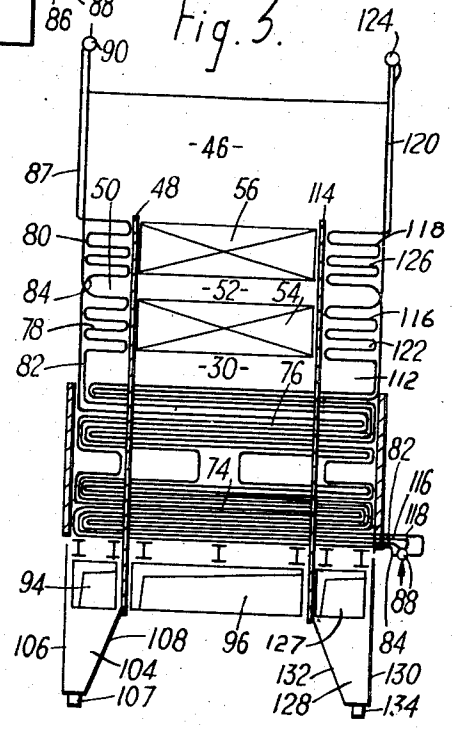

INVENTOR.

BY Ronald E. Zoller

ATTORNEY

United States Patent Office 2,968,289
Patented Jan. 17, 1961

2,968,289

VAPOR GENERATING UNIT

Ronald Ernest Zoller, London, England, assignor to Babcock & Wilcox Limited, London, England, a corporation of Great Britain

Filed Oct. 29, 1958, Ser. No. 770,428

4 Claims. (Cl. 122—480)

This invention relates to tubulous vapor generating units of the kind having an upright furnace chamber, burner means for supplying fluent fuel to a lower region thereof, and a laterally extending pass connecting an upper region of the furnace chamber to a downflow pass containing vapor superheating or/and reheating surfaces and formed with a damper-controlled by-pass to the said surfaces.

In vapor generating units of this kind the burner means are conventionally arranged to discharge through that wall of the furnace chamber remote from the laterally extending pass and the by-pass and the portion of the downflow pass containing the superheating or/and reheating surfaces which extend from side to side of the downflow pass above respective hoppers. On occasion, however, the positioning of the burner means at the opposite side of the furnace chamber becomes desirable or necessary, and in such cases the problem may arise that in view of the requisite vertical dimensions of the downflow gas pass and the hoppers a satisfactory arrangement of the burner means is difficult or impossible to achieve.

In a tubulous vapor generating unit of the kind specified in accordance with the present invention, the burner means are disposed at the same side of the furnace chamber as and at a level below the downflow pass, the bypass is formed at one side of the downflow pass and is provided at its bottom with a dust hopper while the portion of the downflow pass containing the superheating or/and reheating surfaces is formed with a gas-swept bottom so arranged as to insure under all normal operating conditions of the boiler a gas velocity over the surface of the bottom adequate to sweep depositing dust therefrom.

The invention will now be described, by way of example, with reference to the accompanying partly diagrammatic drawings, in which:

Fig. 1 is a somewhat diagrammatic sectional side elevation of a tubulous steam generating unit;

Fig. 2 is a sectional end elevation taken on the line II—II of Fig. 1; and

Fig. 3 is a sectional end elevation of a tubulous steam generating unit embodying the invention in an alternative form.

Referring to Figures 1 and 2 of the drawings, a vertically elongated furnace chamber 2 with a hopper bottom 4 has front and rear walls 6 and 8 respectively and similar side walls, of which the wall 10 is seen in Figure 1, the walls 6, 8 and 10 being lined with steam generating tubes 12, 14 and 16 respectively connected at their lower ends to a corresponding distributing header 18, 20 and 22. At the upper ends the tubes 12 and 14 are connected direct to a steam and water drum 24. The tubes 16 are connected at the upper ends to a header 21 which, in turn, is connected by circulator tubes 25 to the steam and water drum 24. The water space of the drum is connected by downcomers (not shown) to the headers 18, 20 and to side wall headers such as the

header 22. The rear wall 8 of the furnace chamber 2 has an upper portion 28 common to the furnace chamber 2 and to a downflow heating gas pass 30 and some of the rear wall tubes 14 help to form in an upper region of the furnace chamber 2 an inwardly extending arch 32, the upper surface of which defines the floor 34 of a laterally extending heating gas pass 36. A group 38 of the tubes 14 in the arch 32 extends vertically from the nose 40 thereof to constitute a screen 42 at the inlet of the laterally extending pass 36, and a second group 44 of the tubes 14 extends vertically between the outlet of the laterally extending pass 36 and a gas turning space 46 at the top of the downflow pass 30.

A vertically extending baffle 48 within the downflow pass 30 extends forwardly and rearwardly below the gas turning space 46 to divide the downflow pass 30 into a by-pass 50 and a main pass 52, the latter containing two vertically spaced banks 54 and 56 of primary superheater tubes arranged as series connected horizontal sinuous tubes, the legs of which extend normal to the front and rear sides of the downflow pass. A portion of the bank 56 forms a vertical looped extension 57 in the gas turning space 46 adjacent the entry thereof. The steam space of the steam and water drum 24 is connected by connectors 58 to an intermediate header 60 from which tubes 64 lining the roof 66 of the downflow pass 30 and the upper portion of the rear wall 68 thereof extend to a second intermediate header 62 serving as the inlet header to the primary superheater bank 54. An outlet header 59 from the primary superheater bank 56 is connected by connectors 61 to an inlet header 69 of a pendant secondary superheater tube bank 70 disposed in a section of the laterally extending pass 36 adjacent the outlet end thereof. Connectors 71 connect the secondary superheater bank 70 to a final superheater bank 72 having a discharge header 73 and disposed in a section of the laterally extending pass 36 adjacent the inlet thereof.

Below the primary superheater bank 54 are banks 74 and 76 of sinuous economizer tubes extending in planes normal to the superheater tubes across both the main pass 52 containing the primary superheater banks 54 and 56 and the by-pass 50, while other sections 78 and 80 of the economizer are disposed within the by-pass 50 at the same levels as the banks 54 and 56 of superheater tubes. Three rows 82, 84, 86 of tubes arranged in parallel flow relationship extend from an inlet header 88 and parts of the rows are arranged in a sinuous nested manner to form the economizer bank 74 and a lower portion 75 of the economizer bank 76. From the lower portion 75 of the economizer bank 76 a further part of the tube row 82 extends upwardly along the by-pass wall 87 remote from the main pass 52 and at the level of the primary superheater bank 54 is arranged in a sinuous manner to form the economizer bank 78. From the economizer bank 78 the tube row 82 extends upwardly along the upper portion of the wall 87 to an upper wall outlet header 90. From the lower portion 75 of the economizer bank 76 a further part of the tube row 84 extends upwardly along the wall 87 and at the level of the primary superheater bank 56 is arranged in a sinuous manner to form the economizer bank 80. From the economizer bank 80 the tube row 84 extends upwardly along the upper portion of the wall 87 to the upper wall outlet header 90. The uppermost portion 77 of the economizer bank 76 is formed by a further part of the tube row 86. From the upper portion 77 of the economizer bank 76 the tube row 86 extends upwardly to line the main pass wall 89 remote from the by-pass 50 and is connected into an upper wall outlet header 92. The outlet headers 90 and 92 are connected by connectors (not shown) to the

steam and water drum 24. Below the economizer bank 74 the by-pass 50 and the main pass 52 are provided with dampers 94 and 96 respectively.

Below the portion of the economizer tube bank 74 under the main pass 52 there is a bottom 98 inclined downwardly away from the furnace chamber 2 and disposed so close to the lowermost enconomizer tube bank 74 as to insure under all normal operating conditions of the boiler a gas velocity over the surface of the bottom 98 adequate to sweep depositing dust therefrom. From the lower end of the bottom 98 of the main pass 52 extends a duct 102 having such a cross-sectional area as to insure that the entrained dust will be swept therethrough, the duct 102 leading to an air heater (not shown) having a hopper bottom for the collection of dust.

A hopper 104 below the by-pass 50 is formed with an upright wall 106 at the side thereof remote from the main pass 52 and an opposite wall 108 converging downwardly towards the upright wall 106. Plate valve means 107 are provided at the lowermost region of the hopper 104 for removal, when necessary, of dust particles deposited therein.

In operation, steam from the steam and water drum 24 passes through the connectors 58 to the intermediate header 60 and then passes through the tubes 64 lining the roof 66 and upper portion of the wall 68 to the intermediate header 62. From the intermediate header the steam passes through the banks 54 and 56 and the vertical extension 57 of the primary superheater to the outlet header 59.

From the outlet header 59 the steam flows through the connectors 61 to the inlet header 69 and through the secondary superheater bank 70, connectors 71, final superheater bank 72 to the discharge header 73.

It will be appreciated that in the case of a superheater having convection characteristics the maximum degree of by-passing will be exercised during operation of the boiler at its highest output, while, as the load falls over a range, the by-passing will be progressively decreased in order to maintain a desired degree of superheat. Consequently the gas velocity through the by-pass 50 decreases but dust deposited at the bottom of the by-pass is accommodated in the hopper 104. At the same time the reduction in the proportion of the gases flowing through the by-pass 50 maintains the requisite gas velocity over the gas-swept bottom 98 of the main pass 52 with the result that the bottom 98 is maintained substantially free of dust.

The positioning of the hopper 104 below the by-pass 50 at one side of the boiler and the avoidance of hoppers below the main pass 52 enables adequate space to be provided below the downflow pass 30 for the accommodation of vertically spaced rows of fluid fuel burners 100 (indicated by broken lines) within a windbox 110 arranged to discharge through the rear wall 8 of the furnace chamber. The downward and outward slope of the wall 108 enables the burners nearest the wall 108 to be positioned closely adjacent to both the lowermost economizer tube bank 74 and the by-pass wall 87.

In the modified arrangement shown in Fig. 3 the downflow pass 30 is provided with two by-passes 50 and 112 arranged one at each side of the main pass 52. Thus the vertically extending baffle 48 separates the main path 52 from the by-pass 50, while a vertically extending baffle 114 at the side of the main pass remote from the by-pass 50 separates the main pass 52 from the by-pass 112. In the modified arrangement shown, four tube rows 82, 84, 116 and 118 extend in parallel flow relationship from the economizer inlet header 88 and parts of the rows are arranged in a sinuous nested manner to form the economizer banks 74 and 76. From the economizer bank 76 further parts of the tube rows 82 and 84 extend upwardly to form the economizer banks 78 and 80 respectively, as is described in conjunction with Fig. 2.

From the economizer bank 76 a further part of the tube row 116 extends upwardly along the side wall 120 and at the level of the primary superheater bank 54 is arranged in a sinuous manner to form an economizer bank 122. From the economizer bank 122 the tube row 116 extends upwardly along the upper portion of the side wall 120 to an upper wall outlet header 124. From the economizer bank 76 a further part of the tube row 118 extends upwardly along the wall 120 and at the level of the primary superheater bank 56 is arranged in a sinuous manner to form an economizer bank 126. From the economizer bank 126 the tube row 118 extends upwardly along the upper portion of the side wall 120 to the upper wall outlet header 124. The outlet headers 90 and 124 are connected by connectors (not shown) to the steam and water drum 24.

The by-pass 112 is provided with a damper 127 positioned below the economizer bank 74. Below the damper 127 the by-pass 112 is provided with a hopper 128 formed with an upright wall 130 at the side thereof remote from the main pass 152 and an opposite wall 132 converging downwardly towards the upright wall 130. Plate valve means 134 are provided at the lowermost region of the hopper 128 for removal, when necessary, of dust particles deposited therein.

The operation of the modified arrangement is substantially similar to that described in conjunction with Figs. 1 and 2, the maximum degree of by-passing through both by-passes being exercised during operation of the boiler at its highest output. As the load falls over a range the by-passing will be progressively descreased in both by-passes, thereby insuring a horizontally symmetrical flow of gases through the lateral pass.

It will be understood that, in both of the arrangements described, the superheater tube banks 54 and 56, or alternatively, the superheater tube bank 54 or 56 alone, may be utilized as reheater surface, the amount of by-passing then determining the degree of reheat, the degree of superheat being controlled by other suitable means, such as an attemperator positioned intermediate superheater banks 70 and 72.

While in accordance with the provisions of the statutes the invention has been illustrated and described in the best form and mode of operation of the invention now known, those skilled in the art will understand that changes may be made in the form of the apparatus disclosed without departing from the spirit of the invention covered by the claims, and that certain features of the invention may sometimes be used to advantage without a corresponding use of other features.

What is claimed is:

1. A vapor generating unit comprising walls defining an upright furnace chamber having a heating gas outlet, wall means forming an upright main gas pass laterally adjacent said furnace chamber and defined in part by a vertical planar wall portion of one of the walls of said furnace, said main gas pass having an inlet at its upper end communicating with said gas outlet and a gas exit at its lower end, vapor heating surface disposed in said main gas pass, wall means forming an upright damper-controlled gas by-pass disposed laterally adjacent said furnace chamber and to one side of said main gas pass and defined in part by said vertical planar wall portion of said one wall of the furnace chamber, said gas by-pass having an inlet at its upper end at substantially the same level as the gas inlet of the main gas pass communicating with said gas outlet and a gas exit at its lower end at about the same level as the gas exit of the main gas pass, and burner means disposed in said vertical planar wall portion of said one wall of the furnace chamber and directly below said main gas pass and firing the furnace with a fuel resulting in solid particles in suspension in the furnace gases, the lower portion of the wall means of the main gas pass including gas-swept bottom wall means and being so proportioned and arranged as to insure under all normal

operating conditions of the unit a gas velocity over the surface of the bottom adequate to sweep depositing solids therefrom and through the gas exit of the main gas pass, said bottom wall means of the main gas pass overlying said burner means and being swept only by the gases flowing through said main gas pass, said gas by-pass having its lower portion formed with a hopper ahead of the gas exit of the by-pass, with the lower portion of the wall means of the gas by-pass being so proportioned as to insure under all normal operating conditions of the unit a gas velocity low enough to cause solids in the gases flowing through the lower portion of the gas by-pass to separate from the gases and deposit in said hopper, said hopper collecting solids only from the gases flowing through said by-pass.

2. A vapor generating unit as claimed in claim 1 in

which two gas by-passes are positioned at opposite sides of the main gas pass and provided with respective hoppers at the bottoms thereof.

3. A vapor generating unit as claimed in claim 1 having the hopper formed with an upright wall at the outer side thereof remote from said main gas pass and an opposite wall converging downwardly towards said upright wall.

4. A vapor generating unit as claimed in claim 1 having said gas-swept bottom wall means inclined downwardly away from the furnace chamber.

References Cited in the file of this patent

UNITED STATES PATENTS

2,254,226	Koch	Sept. 2, 1941
2,836,156	Schaap	May 27, 1958