(19) Europäisches Patentamt
European Patent Office
Office européen des brevets

(11) Publication number : **0 383 500 B1**

(12) # EUROPEAN PATENT SPECIFICATION

(45) Date of publication of patent specification : **30.09.92 Bulletin 92/40**

(51) Int. Cl.[5] : **F02M 65/00**, F02B 77/04, B08B 3/12

(21) Application number : **90301421.5**

(22) Date of filing : **09.02.90**

(54) **Method of cleaning an electronically controllable injector.**

(30) Priority : **14.02.89 AU 2727/89**

(43) Date of publication of application : **22.08.90 Bulletin 90/34**

(45) Publication of the grant of the patent : **30.09.92 Bulletin 92/40**

(84) Designated Contracting States : **AT BE CH DE DK ES FR GB GR IT LI LU NL SE**

(56) References cited :
AU-B- 5 767 886
DE-A- 3 641 923
US-A- 4 082 565

(73) Proprietor : **HIGH TECH AUTO TOOLS PTY LTD**
60 Pitt Street
New South Wales 2001 (AU)

(72) Inventor : **Skovron, Alan**
39 Portland Street
Dover Heights, New South Wales 2030 (AU)

(74) Representative : **Brown, John David et al**
FORRESTER & BOEHMERT
Franz-Joseph-Strasse 38
W-8000 München 40 (DE)

EP 0 383 500 B1

Note : Within nine months from the publication of the mention of the grant of the European patent, any person may give notice to the European Patent Office of opposition to the European patent granted. Notice of opposition shall be filed in a written reasoned statement. It shall not be deemed to have been filed until the opposition fee has been paid (Art. 99(1) European patent convention).

Description

The present invention relates to an apparatus and method for cleaning electronic fuel injectors, and other electronic controlled injections such as air injectors.

Prior art methods of cleaning electronic fuel injectors comprise generally of two methods. The first utilises immersing the injectors or injector tips in the ultrasonic bath of cleaning fluid. This method, however, only cleans the injector nozzle tip and the filter basket. A second method, such as the RAM FIC-109 (trade mark) system, utilises a forced flow and/or forced badk flow of cleaning fluid through the injector. Whilst each system has its advantages, they also have their disadvantages in that they do not fully clean all of the pathway of the injector and hence the injector will not operate at optimum efficiency or may need to be replaced.

A third method is that described in U. S. Patent No. 4082565. This device uses a gravity feed of cleaning fluid through the injectors in the normal direction as they are being periodically pulsed with tips being immersed in an ultrasonic bath. This method suffers from disadvantages in that it does not allow impurity particles trapped in the filter basked to be readily removed during cleaning and also requires a separate reservoirs of cleaning fluid and connections to the inlets of the injectors to flow fluid therethrough. The present invention seeks to ameliorate the disadvantage by providing a method and apparatus for cleaning injectors which allows readily flushing out of the filter basket of the injector.

According to the present invention there is provided a method of cleaning an electronically controllable injector, which method comprises the steps of supporting an electronically controllable injector in an ultrasonic bath of cleaning fluid such that at least the outlet tip is immersed and pulsing the injector, characterised in that the frequency of the ultrasonics and the frequency of the pulses are such that the cleaning fluid flows in the reverse direction through the injector as a result of the interaction of the ultrasonics and the pulsing of the injector.

There is disclosed a method of cleaning an electronic fuel injector comprising the steps of supporting an electronic fuel injector in a bath of cleaning fluid such that at least the outlet tip is immersed and then pulsing said injector at frequencies such that the cleaning fluid flows in the reverse direction through the injector.

There is disclosed a method of cleaning an electronic fuel injector comprising the steps of supporting an electronic fuel injector in a ultrasonic bath of cleaning fluid such that at least the outlet tip is immersed and pulsing said injector whereby the cleaning fluid, while being resonated by the ultrasonics, flows in the reverse direction through the injector as a result of the interaction of the ultrasonics and the pulsing of the injector.

There is disclosed a method of cleaning an electronic fuel injector comprising the steps of supporting an electronic fuel injector in an ultrasonic bath of cleaning fluid such that at least the inlet of the fuel injector is immersed in the cleaning fluid, and pulsing said injectors such that the cleaning fluid flows upwardly through the injector as a result of the interaction of the ultrasonics and the pulsing of the injector.

The present invention will now be described with reference to the accompanying drawings in which:

FIG. 1 shows schematically a partially sectional view of an injector positioned in one embodiment of the present invention;

FIG. 2 illustrates schematically a group of injectors being held in position for cleaning in accordance with one embodiment of the present invention;

FIG. 3 illustrates schematically a group of injectors being held in position for cleaning in accordance with a further embodiment of the present invention;

FIG. 4 illustrates schematically another means of holding an injector for cleaning, not according to the present invention; and

FIG. 5 illustrates schematically another method of cleaning in accordance with a further embodiment of the present invention

In electronic fuel injectors, deposits build up around the nozzle tip, causing the petrol to issue as a stream of fuel, rather than as a fine spray, resulting in a loss of power.

Further the filter basket (3) can be blocked, restricting the flow of petrol through the injectors. Deposits can also, and do, build up around the shaft of the injector pin and on the internal surface of the petrol flow paths thus resulting in loss of efficiency of the injector. The prior art methods do not adequately clean the injector as for example with the use of an ultrasonic bath on its own, the ultrasonics only effectively interact with deposits at the very tip of outlet and do not always remove all of the residue from the filter basket, while with the forced flow or back flow under pressure of cleaning fluid through the injector, reliance is only placed on the cleaning property of the fluid flow and/or pressure to remove the deposits.

Further if a plastic, nylon, or other non-metallic filter basket is used weaker cleaning fluids must be used to prevent degradation of the plastic, nylon or other non-metallic basket. In the case of full immersion in the ultrasonic bath, degradation of plastic, nylon or other non-metallic components of the injector can occur.

In the embodiment of the present invention shown in Figure 1 the fuel injector (10) is held in a plate (4) with the injector outlet nozzle (2) submerged in the cleaning fluid (6) of an ultrasonic bath (not shown)

and is connected to the solenoid input (7). The injector (1) is pulsed at 1.0 - 40.0 m sec at a R.P.M. of between 50-15,000, with the ultrasonic at a frequency of between 10 to 50kHz.

Preferably as shown in Figure 2 the outlet tips (5) are held in a holder (4) such that they are aligned with the epicentre (10) of the transducer, or in the case of a flat or mat transducer (11) the outlet tips(5)are aligned vertically above the transducer to produce optimum ultrasonic interation to improve the reverse flow and cleaning. Preferably the ultrasonics are operated at a frequency in the range of 25-30 kHz.

Because of the interaction between pulsing of the injector and the ultrasonic resonating of the cleaning fluid, the cleaning fluid (6) flows into the outlet nozzle (2) of the injector and back flows though the filter basket (3) and out of the open inlet (8) of the injector. The cleaning fluid (6) as it flows up through the injector (1) is resonated by the ultrasonics and effectively removes the deposits and residues from all the surfaces throughout the flow path of injector.

Any suitable cleaning fluid can be used such as white spirits, RAM 903 or RAM 904 (trade marks), or warm water with caustic soda if a plastic, nylon or other non-metallic filter basket is used or Carbolsol NF (trade mark) in the case of a metal filter basket, High Tech's own specially formulated ASNU™ injector cleaning fluid should be used.

The injectors (1) not according to the present invention could be held in an upright position as shown in Figure 4 wherein the inlet (8) of the injector is immersed in the cleaning fluid (6) and the injectors (1) pushed to draw cleaning fluid through the connectors. Preferably the cleaning fluid is resonated by ultrasonics at a frequency of between 20kHz - 30 kHz.

The injectors (1) not according to the present invention could be fully immersed as shown in Figure 5 with the injectors (1) pulsed to provide flow in either direction or in alternate direction or in alternate directions for specific periods of time. Preferably the cleaning fluid is resonated by ultrasonics.

Claims

1. A method of cleaning an electronically controllable injector, which method comprises the steps of supporting an electronically controllable injector in an ultrasonic bath of cleaning fluid such that at least the outlet tip is immersed and pulsing the injector, characterised in that the frequency of the ultrasonics and the frequency of the pulses are such that the cleaning fluid flows in the reverse direction through the injector as a result of the interaction of the ultrasonics and the pulsing of the injector.

2. A method of cleaning an electronic fuel injector according to Claim 1 wherein the ultrasonics resonate at a frequency between 10 and 50 kHz.

3. A method of cleaning an electronic fuel injector according to Claim 1 or 2 wherein the injector is pulsed at between 1.0 and 40.0 m sec. at a R.P.M. of between 50-15,000.

4. A method of cleaning an electronic fuel injector according to any one of the preceding claims wherein the injectors are aligned with the epicentre of the transducer of the ultrasonics.

5. A method of cleaning an electronic fuel injector according to Claims 1 to 3 wherein the transducer is a mat transducer and the injectors are aligned substantially normal thereto.

6. A method of cleaning an electronic fuel injector according to any one of the preceding claims wherein the cleaning fluid is white spirits.

Patentansprüche

1. Ein Verfahren zum Reinigen eines elektronisch steuerbaren Einspritzers, mit den Schritten des Halten eines elektronisch steuerbaren Einspritzers in einem Ultraschallbad eines Reinigungsfluid derart, daß wenigstens die Auslaßspitze eingetaucht ist und Pulsieren des Einspritzers, dadurch gekennzeichnet, daß die Frequenz des Ultraschalls und die Frequenz der Pulsation derart sind, daß die Reinigungsflüssigkeit infolge des Zusammenwirkens des Ultraschalls und der Pulsation des Injektors in umgekehrter Richtung durch den Einspritzer strömt.

2. Verfahren zum Reinigen eines elektronischen Kraftstoffeinspritzers nach Anspruch 1, wobei die Resonanz-frequenz des Ultraschalls bei Frequenzen zwischen 10 und 50 kHz liegt.

3. Verfahren zum Reinigen eines elektronischen Kraftstoffeinspritzers nach Anspruch 1 oder 2, wobei der Einspritzer zwischen 1,0 und 40,0 msec bei Drehzahlen zwischen 50 und 15.000 pulsiert wird.

4. Verfahren zu Reinigen eines elektronischen Kraftstoffeinspritzers nach einem der vorangehenden Ansprüche, wobei die Einspritzer mit dem Epizentrum des Wandlers des Ultraschalls ausgerichtet sind.

5. Verfahren zum Reinigen eines elektronischen Kraftstoffeinspritzers nach Anspruch 1 bis 3, wobei der Wandler ein mattierter Wandler ist und die

Injektoren im wesentlichen rechtwinklig zu diesem ausgerichtet sind.

6. Verfahren zum Reinigen eines elektronischen Kraftstoffeinspritzers nach einem der vorangehenden Ansprüche, wobei die Reinigungsflüssigkeit Testbenzin ist.

Revendications

1. Procédé de nettoyage d'un injecteur contrôlé électroniquement, ce procédé comprenant les étapes de fixation d'un injecteur contrôlé électroniquement dans un bain ultrasonique de fluide nettoyant, de telle sorte qu'au moins l'embout de sortie soit immergé, et d'impulsion de l'injecteur, caractérisé en ce que la fréquence des ultrasons et la fréquence des impulsions soient telles que le fluide nettoyant circule en direction inverse à travers l'injecteur, ceci résultant de l'interaction des ultrasons et de l'impulsion de l'injecteur.

2. Procédé de nettoyage d'un injecteur électronique de carburant, selon la revendication 1, dans lequel les ultrasons résonnent à une fréquence comprise entre 10 et 50 kHz.

3. Procédé de nettoyage d'un injecteur électronique de carburant, selon l'une des revendications 1 ou 2, dans lequel l'injecteur est soumis à des impulsions de durées comprises entre 1,0 et 40,0 ms, à une fréquence comprise entre 50 et 15 000 par minute.

4. Procédé de nettoyage d'un injecteur électronique de carburant, selon l'une quelconque des revendications précédentes, dans lequel les injecteurs sont alignés avec l'épicentre du transducteur des ultrasons.

5. Procédé de nettoyage d'un injecteur électronique de carburant, selon les revendications 1 à 3, dans lequel le transducteur est un transducteur mat, et les injecteurs sont sensiblement alignés à la perpendiculaire de celui-ci.

6. Procédé de nettoyage d'un injecteur électronique de carburant, selon l'une quelconque des revendications précédentes, dans lequel le fluide de nettoyage est du white spirit.

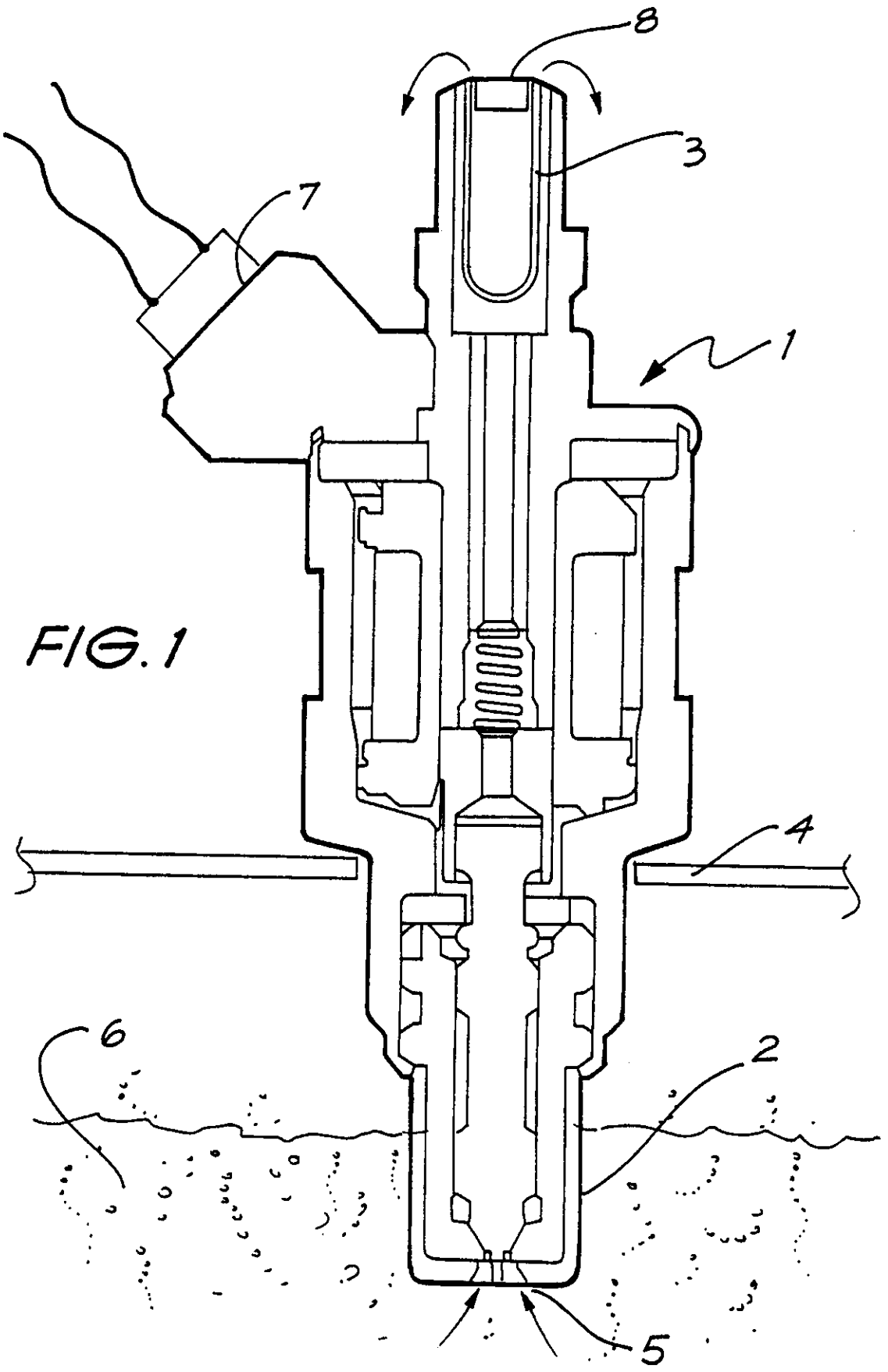

FIG. 1

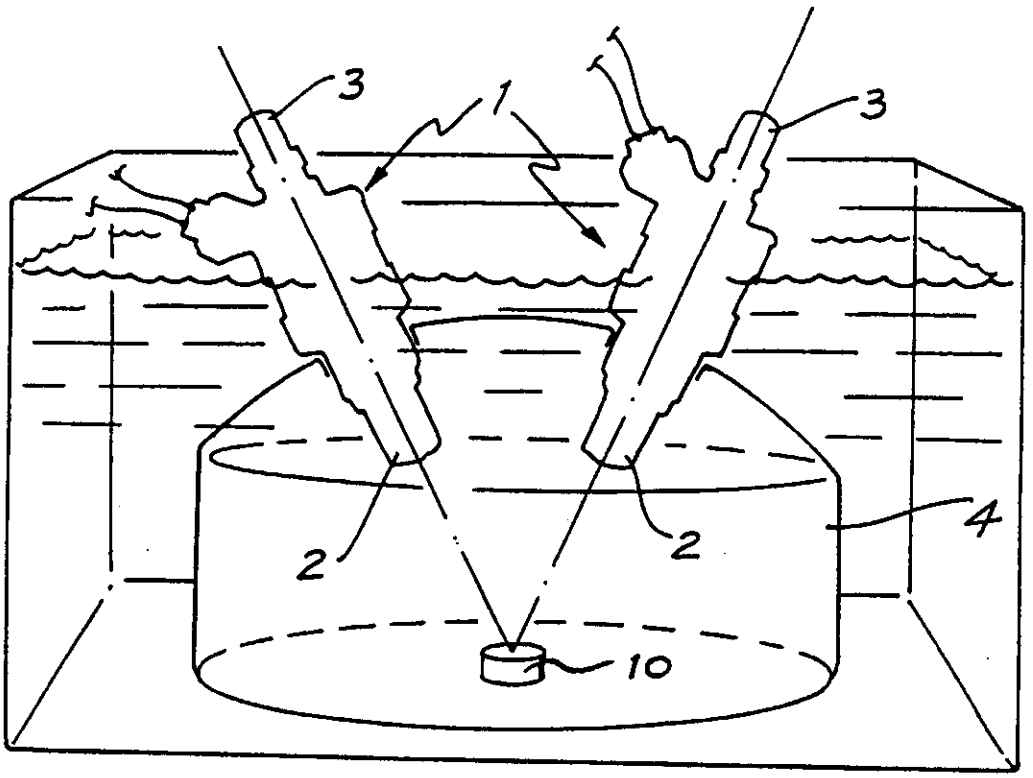

FIG. 2

FIG. 3

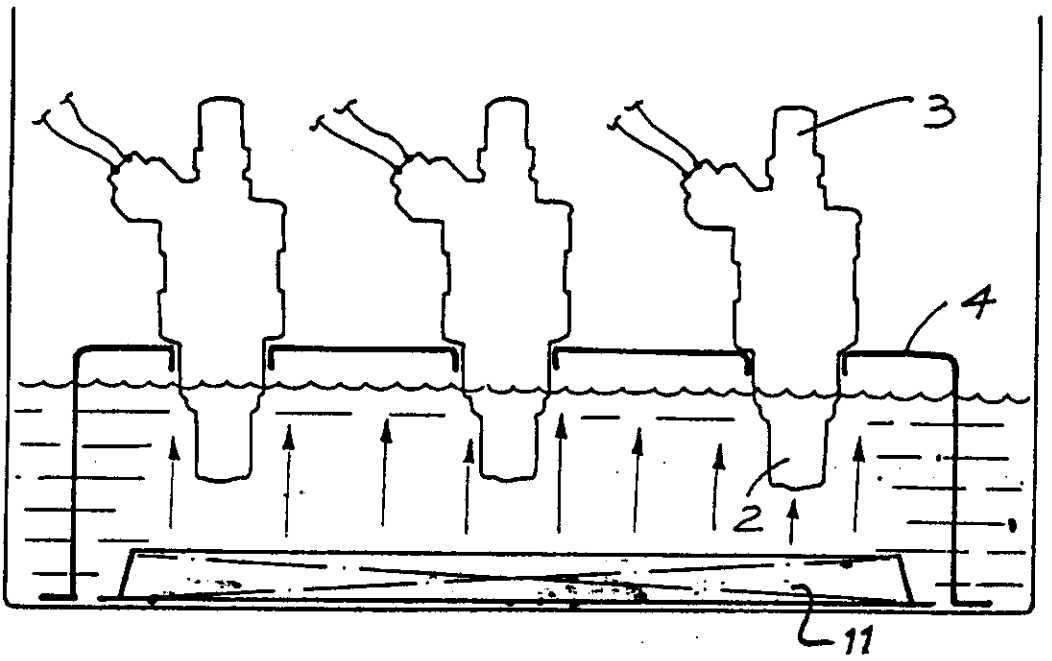

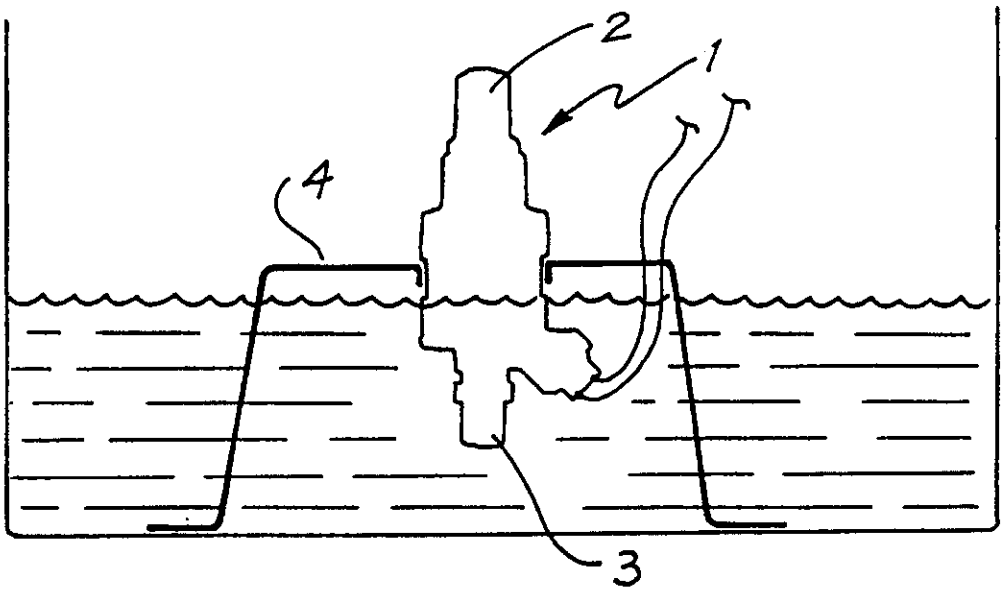

FIG. 4

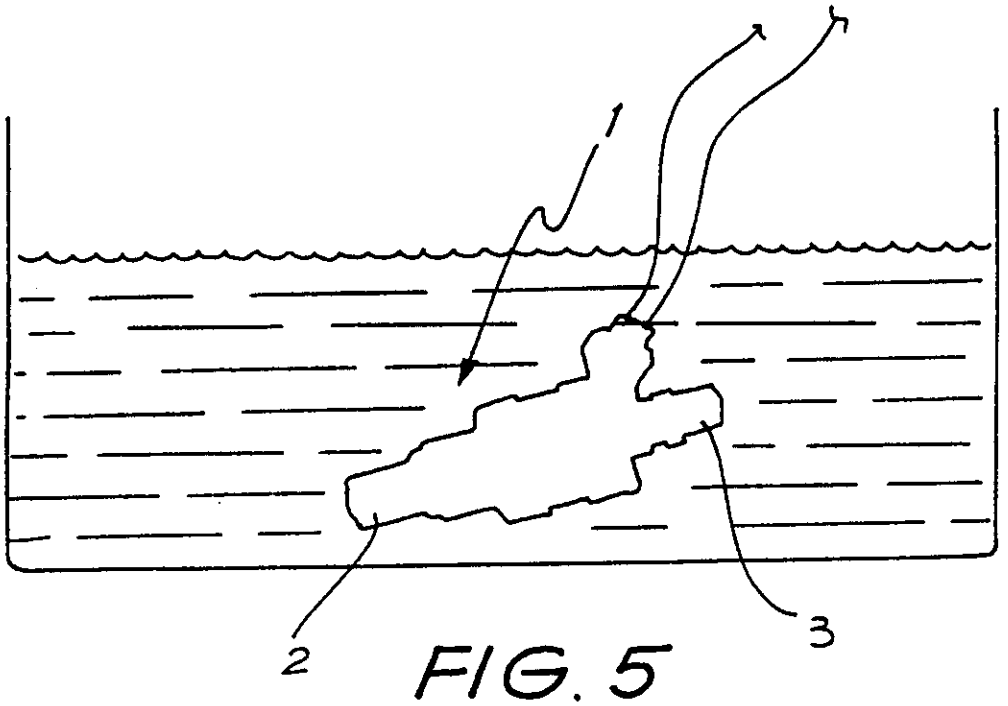

FIG. 5

REGISTER ENTRY FOR EP0383500

European Application No EP90301421.5 filing date 09.02.1990

Priority claimed:
14.02.1989 in Australia - doc: 272789

Designated States BE CH DE DK ES FR GB GR IT LI LU NL SE AT

Title AN ELECTRONIC FUEL INJECTOR CLEANER APPARATUS AND METHOD.

Applicant/Proprietor
HIGH TECH AUTO TOOLS PTY LTD, 60 Pitt Street, New South Wales 2001, Australia [ADP No. 57726093001]

Inventor
ALAN SKOVRON, 39 Portland Street, Dover Heights, New South Wales 2030, Australia [ADP No. 57726101001]

Classified to
F02M B08B F02B

Address for Service
FORRESTER KETLEY & CO, Forrester House, 52 Bounds Green Road, LONDON, N11 2EY, United Kingdom [ADP No. 00000133001]

EPO Representative
JOHN DAVID BROWN, FORRESTER & BOEHMERT Widenmayerstrasse 4/I, D-8000 München 22, Federal Republic of Germany [ADP No. 50638170001]

Publication No EP0383500 dated 22.08.1990
Publication in English

Examination requested 01.10.1990

Patent Granted with effect from 30.09.1992 (Section 25(1)) with title METHOD OF CLEANING AN ELECTRONICALLY CONTROLLABLE INJECTOR.

15.07.1992 FORRESTER KETLEY & CO, Forrester House, 52 Bounds Green Road, LONDON, N11 2EY, United Kingdom [ADP No. 00000133001] registered as address for service
Entry Type 8.11 Staff ID. SW1 Auth ID. AA

28.08.1992 Notification from EPO of change of EPO Representative details from JOHN DAVID BROWN, FORRESTER & BOEHMERT Widenmayerstrasse 4/I, D-8000 München 22, Federal Republic of Germany [ADP No. 50638170001]
to
JOHN DAVID BROWN, FORRESTER & BOEHMERT Franz-Joseph-Strasse 38, W-8000 München 40, Federal Republic of Germany [ADP No. 50638170001]
Entry Type 25.14 Staff ID. RD06 Auth ID. EPT

14.06.1993 EPO: Opposition filed on 17.05.1993
Entry Type 25.1 Staff ID. RD06 Auth ID. EPT

26.07.1993 EPO: Opposition filed on 28.06.1993
Entry Type 25.1 Staff ID. RD06 Auth ID. EPT

**** END OF REGISTER ENTRY ****

RENEWAL DETAILS

PUBLICATION NUMBER EP0383500

PROPRIETOR(S)

HIGH TECH AUTO TOOLS PTY LTD, 60 Pitt Street, New South Wales 2001, Australia

DATE FILED 09.02.1990

DATE GRANTED 30.09.1992

DATE NEXT RENEWAL DUE 09.02.1997

DATE NOT IN FORCE

DATE OF LAST RENEWAL 02.02.1996

YEAR OF LAST RENEWAL 07

STATUS PATENT IN FORCE

**** END OF REPORT ****