(12) INTERNATIONAL APPLICATION PUBLISHED UNDER THE PATENT COOPERATION TREATY (PCT)

(19) World Intellectual Property Organization
International Bureau

(43) International Publication Date
10 December 2009 (10.12.2009)

PCT

(10) International Publication Number
WO 2009/147000 A1

(51) International Patent Classification:
F27B 7/20 (2006.01) *C04B 18/16* (2006.01)
C04B 7/43 (2006.01) *C04B 7/36* (2006.01)

(21) International Application Number:
PCT/EP2009/055689

(22) International Filing Date:
12 May 2009 (12.05.2009)

(25) Filing Language: English

(26) Publication Language: English

(30) Priority Data:
PA200800778 6 June 2008 (06.06.2008) DK

(71) Applicant *(for all designated States except US)*: **FLSMIDTH A/S** [DK/DK]; Vigerslev Allé 77, DK-2500 Valby (DK).

(72) Inventor; and

(75) Inventor/Applicant *(for US only)*: **HJULER, Klaus** [DK/DK]; Skovbakken 98, DK-3520 Farum (DK).

(74) Agent: **HYNELL PATENTTJÄNST AB**; Patron Carls väg 2, S-683 40 Uddeholm (SE).

(81) Designated States *(unless otherwise indicated, for every kind of national protection available)*: AE, AG, AL, AM, AO, AT, AU, AZ, BA, BB, BG, BH, BR, BW, BY, BZ, CA, CH, CN, CO, CR, CU, CZ, DE, DK, DM, DO, DZ, EC, EE, EG, ES, FI, GB, GD, GE, GH, GM, GT, HN, HR, HU, ID, IL, IN, IS, JP, KE, KG, KM, KN, KP, KR, KZ, LA, LC, LK, LR, LS, LT, LU, LY, MA, MD, ME, MG, MK, MN, MW, MX, MY, MZ, NA, NG, NI, NO, NZ, OM, PG, PH, PL, PT, RO, RS, RU, SC, SD, SE, SG, SK, SL, SM, ST, SV, SY, TJ, TM, TN, TR, TT, TZ, UA, UG, US, UZ, VC, VN, ZA, ZM, ZW.

(84) Designated States *(unless otherwise indicated, for every kind of regional protection available)*: ARIPO (BW, GH, GM, KE, LS, MW, MZ, NA, SD, SL, SZ, TZ, UG, ZM, ZW), Eurasian (AM, AZ, BY, KG, KZ, MD, RU, TJ, TM), European (AT, BE, BG, CH, CY, CZ, DE, DK, EE, ES, FI, FR, GB, GR, HR, HU, IE, IS, IT, LT, LU, LV, MC, MK, MT, NL, NO, PL, PT, RO, SE, SI, SK, TR),

[Continued on next page]

(54) Title: GASIFICATION WITH SEPARATE CALCINATION

Fig. 2

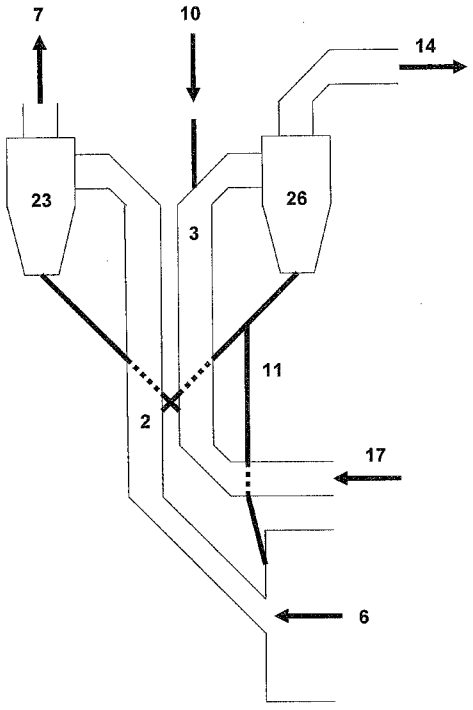

(57) Abstract: A description is provided of a method and an apparatus for manufacturing of cement whereby cement raw meal is preheated in a preheater, calcined in a calciner by contact with hot gases which are introduced into the calciner via a gas inlet and being diverted from the calciner via a gas outlet, and where calcined cement raw meal is diverted from the calciner, burned into cement clinker in a kiln and subsequently cooled in a clinker cooler. The method and the apparatus are peculiar in that at least a portion of the calcined cement raw meal diverted from the calciner is heated further in a separate system to a temperature which exceeds the calcination temperature, and being subsequently recirculated to the calciner, and in that at least a portion of the gases which are diverted via the gas outlet of the calciner is removed from the plant with a view to storage in the underground or other additional treatment.

WO 2009/147000 A1

OAPI (BF, BJ, CF, CG, CI, CM, GA, GN, GQ, GW, ML, MR, NE, SN, TD, TG).

Published:

— *with international search report (Art. 21(3))*

GASIFICATION WITH SEPARATE CALCINATION

The present invention relates to a method for manufacturing cement whereby cement raw meal is preheated in a preheater, calcined in a calciner by contact with hot gases which are introduced into the calciner via a gas inlet and being diverted from the calciner via a gas outlet, and where calcined cement raw meal is diverted from the calciner, burned into cement clinker in a kiln and subsequently cooled in a clinker cooler. The invention also relates to a plant for carrying out the method.

In modern cement manufacturing plants, the raw materials are typically heated by heat exchange with exhaust gases from the kiln and/or the calciner. This takes place in a so-called suspension preheater, typically a tower made up of a number of cyclones connected in series. Calcination is typically carried out in a duct section at the bottom of the tower where the temperature and retention time are sufficient for calcination, i.e. the decomposition of limestone, to take place, subject to release of carbon dioxide. The calciner may, viewed in the direction of movement of the material, be installed immediately ahead of the rotary kiln, such as in an ILC installation and/or in the duct with hot air from the cooler, such as in an SLC installation. The calciner is fed with so-called secondary fuel, and combustion hereof is effected by means of oxygen which is in surplus from the kiln or contained in the hot air from the cooler. Typically, a small amount of kiln gases are removed via a bypass to prevent accumulation of certain components in the process. The calcined material is then directed to the kiln, in most cases a rotary kiln, in which the subsequent heating is done in counterflow to exhaust gases from a primary burner. After being burned in the rotary kiln, the clinker is directed to a clinker cooler in which the clinker is cooled to a level around 100 degrees Celcius by means of atmospheric air.

The energy consumed in connection with the cement production process at a modern plant, as described above, is approximately 3 MJ/kg clinker. By comparison, the theoretical minimum energy consumption is approximately 1.7 MJ/kg. The difference between the actual and the theoretical energy

consumption is primarily due to loss from hot surplus air from the clinker cooler and heat loss from the exhaust gases which are diverted from the preheater. The specific emission of carbon dioxide is approximately 1 kg CO_2/kg clinker, of which approximately one half relates to the limestone contained in the cement raw meal, whereas the other half relates specifically to the fuel. It is estimated that the contribution made by cement manufacturing processes to the global human-caused emissions of the greenhouse gas carbon dioxide is approximately 5 per cent, and, therefore, it would be highly desirable to reduce this level.

Some plants utilize a portion of the heat content in the surplus air from the cooler and the exhaust gases from the preheater to produce electricity, so-called co-generation. However, the available amount of energy is at a relatively modest level, typically on the order of 5-10 MW heat for a plant with a capacity rating of 5000 t clinker/24-h, corresponding to 3-6 % of the rated thermal input. Also, the heat available will be of low grade, i.e. its efficiency in relation to electricity production will be relatively small, ie. at a level around 15-20 %. Because of these factors, the benefits gained by setting up a co-generation plant will in many cases not be commensurate with the costs involved.

It is the purpose of the present invention to provide a method, as well as a plant, for manufacturing cement whereby the total amount of carbon dioxide released to the atmosphere is significantly reduced.

This is obtained by a method of the kind mentioned in the introduction and **being characterized in that** at least a portion of the calcined cement raw meal diverted from the calciner is heated further in a separate system to a temperature which exceeds the calcination temperature, and being subsequently recirculated to the calciner, and in that at least a portion of the gases which are diverted via the gas outlet of the calciner is removed from the plant with a view to storage in the underground or other additional treatment.

Hence it is ensured that at least a portion of the heat volume required for the calcination process can be supplied to the calciner indirectly in the form of hot

calcined cement raw meal, which entails that the calciner does not necessarily require direct input of fuel and air as required for prior art designs. The carbon dioxide released during the calcination process can therefore be diverted from the calciner in a substantially pure form which is suitable for storage in the underground or other additional treatment. The carbon dioxide emission to the atmosphere as result of the cement manufacturing process can thus be reduced by 50 per cent or more, and the plant owner can obtain savings with respect to the purchase of emission licences. It is further obtained that a significant portion of the energy input to the process will be in the form of surplus heat in the gases from the calciner at a relatively high temperature of around 850 degrees Celcius which can be utilized for producing electricity with a high level of efficiency, i.e. around 40-45 per cent. Hence, the investment in a co-generation plant will be an attractive proposition.

The gases from the calciner may also be fed with fuel, thereby making it possible to produce so-called synthesis gas, or syngas, which substantially contains carbon monoxide, hydrogen, carbon dioxide and water vapours. Syngas is a combustible gas which may advantageously be utilized as a fuel or for producing electricity or as the basis for the synthesis e.g. of methanol. Finally, the gases from the calciner may be utilized for heating cement raw meal in a preheater which is substantially nitrogen-free, with subsequent discharge of the gases for storage in the underground or other additional treatment.

In one embodiment a portion of the cement raw meal from the calciner may be brought into contact with kiln gases which typically have a temperature of at least 1100 degrees Celsius. This may take place by suspending a protion of the calcined cement raw meal in a stream of exhaust gases from the kiln, e.g. in a riser duct, whereby it is heated to a temperature exceeding the calcination temperature before it is subsequently separated off in a cyclone from which it is recirculated to the calciner. The heat content in all the gases being diverted from the calciner is utilized for producing electricity, e.g. in a steam boiler or a similar device, whereupon the cooled gases are removed from the plant for storage in the underground or other additional treatment.

Because the transfer of heat from the cement raw meal which is recirculated to the calciner to the cement raw meal from the preheater will be difficult to achieve without a certain amount of gases for suspending the cement raw meal in the calciner, a portion of the gases being diverted from the calciner, and being substantially made up of carbon dioxide, may advantageously be recirculated and re-introduced into the calciner via its gas inlet. In a second embodiment a portion of the gases being diverted from the calciner is therefore recirculated to the calciner, whereas the heat content in the remaining portion is utilized to produce electricity, e.g. in a steam boiler or a similar device, after which the cooled gases are removed from the plant for storage in the underground or other additional treatment.

In a third embodiment, the heat content in all the gases being diverted from the calciner may be utilized for producing electricity, e.g. in a steam boiler or a similar device. From the steam boiler or a similar device a portion of the cooled gases is recirculated to the calciner whereas the remaining portion of the cooled gases is removed from the plant for storage in the underground or other additional treatment. In this embodiment, the gases which are recirculated to the calciner may advantageously be re-heated prior to being introduced into the calciner, which, for example, may be done through heat exchange with the clinker in the clinker cooler. Because the heat content in the clinker in this embodiment is utilized for heating the gases which are to be re-introduced into the calciner, there will be no transfer of heat from the clinker to the kiln as is the case for prior art designs. This means that the temperature conditions in the kiln can be regulated independently of the conditions in the clinker cooler.

In a fourth embodiment the heat content in all the gases being diverted from the calciner may be utilized for preheating the cement raw meal in a substantially nitrogen-free preheater. From the preheater a portion of the cooled gases is recirculated to the calciner whereas the remaining portion of the cooled gases is removed from the plant for storage in the underground or other additional treatment. In this embodiment the gases being recirculated to the calciner may

advantageously be re-heated prior to being introduced into the calciner which, as mentioned above, may be done by heat exchange with the clinker in the clinker cooler. This embodiment may be relevant in cases where it is not desirable to produce electricity.

In all the aforementioned embodiments, water and/or water vapours may advantageously be supplied to the calciner and/or the gases being diverted from the calciner and/or the gases being recirculated to the calciner. The presence of water vapours will reduce the concentration of carbon dioxide, making it possible to achieve a faster calcination process at a given temperature, alternatively at the same rate at a lower temperature. In this embodiment the gases from the calciner contain substantial amounts of water vapours which may condense subject to cooling in the steam boiler or a similar device. The condensed water can subsequently be re-used.

In all the aforementioned embodiments, it may also be advantageous to supply fuel to the calciner and/or the gases being diverted from the calciner and/or the gases being recirculated to the calciner. Carbon dioxide and, where relevant, water vapours may react with (gasification) the input fuel, causing syngas to be formed. This syngas may be combusted completely or partially with oxygen and be directed to the calciner and/or it may be utilized to produce electricity and/or it may be used as the basis for synthesis of e.g. methanol. The gasification may take place in a gasifier unit and/or in a combined gasifier and boiler unit and/or in the calciner per se.

The plant for carrying out the method according to the invention comprises a preheater for preheating cement raw meal, a calciner for calcining preheated cement raw meal, said calciner comprising a gas inlet and a gas outlet, a kiln for burning cement clinker, and a cooler for cooling the cement clinker, and being characterized in that it comprises means for further heating of at least a portion of the calcined cement raw meal from the calciner in a separate system, means for separating the cement raw meal thus subjected to further heating, means for recirculating the separated cement raw meal to the calciner, and means for

extracting from the plant at least a portion of the gases being diverted from the calciner with a view to storage in the underground or other additional treatment.

The plant may further comprise means for producing electricity utilizing the gases diverted from the calciner as well as means for preheating cement raw meal in a substantially nitrogen-free preheater.

The plant may further comprise means for directing a portion of the gases diverted from the calciner back to the gas inlet of the calciner as well as means for bringing the gases into contact with hot clinker.

The plant may further comprise means for feeding water and/or water vapours to the calciner and/or the gases being diverted from the calciner and/or the gases being recirculated to the calciner, as well as means for input of fuel to the calciner and/or the gases being diverted from the calciner and/or the gases being recirculated to the calciner.

The invention will now be described in further details with reference to:

Fig. 1 showing a basic diagram of the process according to the invention, and

Fig. 2 showing an example of a physical embodiment of the invention, and

Fig. 3 showing an example of a flow diagram of a process based on the present invention.

It appears from Fig. 1 how cement raw meal 9 is preheated in a preheater 1 by use of hot gases 7. The preheated cement raw meal 10 is directed to a calciner 3 in which the cement raw meal is calcined. A portion of the gases 14 from the calciner 3 is diverted 15, whereas a second portion 16 is directed to a gasifier 4 which is fed with fuel and, where relevant, oxygen 19. The gases 17 from the gasifier 4 are recirculated to the calciner 3. It further appears from Fig. 1 how calcined cement raw meal from the calciner 3 is directed to a splitter gate or

similar device 5 from which a portion of the calcined cement raw meal 11 is directed to a kiln (not shown), and another portion 12 is directed to a riser duct 2. The riser duct 2 receives exhaust gases 6 from a kiln (not shown) and secondary fuel and, where relevant, air 18. The calcined cement raw meal 13 is separated from the exhaust gases 6 by means of a cyclone or a similar device and recirculated to the calciner 3.

It appears from Fig. 2 how the heat transfer from kiln exhaust gases 6 to calcined cement raw meal from the calciner 3 can in a simplified manner be achieved by means of two parallel cyclone separators. Preheated cement raw meal 10 is brought into contact with a hot gas stream 17 in a duct 3 causing the cement raw meal to be calcined. The calcined cement raw meal is separated from the gases 14 in a cyclone 26. A portion of the hot gases 14 is recirculated 17 to the duct 3. The calcined cement raw meal from the cyclone 26 is split into two flow streams by means of a splitter gate or a similar device (not shown), with one flow stream 11 being directed to a kiln whereas the second flow stream is directed to a duct 2. In the duct 2 the calcined cement raw meal is brought into contact with hot kiln exhaust gases 6, with the material subsequently undergoing separation in the cyclone 23. The separated material is recirculated to the duct 3.

In Fig. 3 is shown a flow diagram with temperature conditions indicated for gas- and material flows in a preferred embodiment of the invention. The cement raw meal is preheated in the preheater 1 and directed to the calciner 3. The hot gases from the calciner 3 are directed to the boiler 27 where the energy contained in the gases is utilized e.g. for producing electricity. A portion of the cooled gases is subsequently directed to the clinker cooler 25 whereas the remaining gases are led away from the plant. In the clinker cooler 25 the gases are re-heated through heat exchange with the clinker from the kiln 24, and, where relevant, water and/or water vapours may be added to adjust the concentration of carbon dioxide. The hot carbon dioxide laden gases are directed to a gasifier 4 where the gases are used for gasification of solid and/or liquid fuel being fed to the gasifier. The syngas thus produced is combusted completely or partially

subject to simultaneous input of oxygen and the gases are passed on to the calciner 3. A portion of the calcined cement raw meal from the calciner 3 is simultaneously brought into contact with exhaust gases from the kiln 24 in a duct 2, and the material is subsequently separated and recirculated to the calciner 3. Fuel and air are supplied to the duct 2 and the kiln 24.

Patent claims

1. A method for manufacturing of cement whereby cement raw meal is preheated in a preheater, calcined in a calciner by contact with hot gases which are introduced into the calciner via a gas inlet and being diverted from the calciner via a gas outlet, and where calcined cement raw meal is diverted from the calciner, burned into cement clinker in a kiln and subsequently cooled in a clinker cooler, **characterized in** that at least a portion of the calcined cement raw meal diverted from the calciner is heated further in a separate system to a temperature which exceeds the calcination temperature, and being subsequently recirculated to the calciner, and in that at least a portion of the gases which are diverted via the gas outlet of the calciner is removed from the plant with a view to storage in the underground or other additional treatment.

2. A method according to claim 1, **characterized in** that at least a portion of the gases being diverted from the calciner is utilized for producing electricity.

3. A method according to claim 2, **characterized in** that at least a portion of the gases utilized for producing electricity is recirculated to the calciner and in that the remainder is removed from the plant with a view to storage in the underground or other additional treatment.

4. A method according to claim 1, **characterized in** that at least a portion of the gases being diverted from the calciner is utilized for preheating cement raw meal in a substantially nitrogen-free preheater.

5. A method according to claim 4, **characterized in** that at least a portion of the gases utilized for preheating cement raw meal is recirculated to the calciner and in that the remainder is removed from the plant with a view to storage in the underground or other additional treatment.

6. A method according to claim 3 or 5, **characterized in** that the gases being recirculated to the calciner are brought into contact with clinker, e.g. in the clinker cooler.

7. A method according to any of the preceding claims, **characterized in** that water and/or water vapours is/are added to the calciner and/or the gases which are diverted from the calciner.

8. A method according to claim 3, 5 or 6 **characterized in** that water and/or water vapours is/are added to the gases which are recirculated to the calciner.

9. A method according to any of the preceding claims, **characterized in** that fuel is supplied to the calciner and/or the gases which are diverted from the calciner.

10. A method according to claim 3, 5, 6 or 8 **characterized in** that fuel is supplied to the gases which are recirculated to the calciner.

11. A plant for carrying out the method according to any of the preceding claims, said plant comprising a preheater for preheating cement raw meal, a calciner for calcining preheated cement raw meal, said calciner comprising a gas inlet and a gas outlet, a kiln for burning cement clinker, and a cooler for cooling the cement clinker, **characterized in** that it comprises means for further heating of at least a portion of the calcined cement raw meal from the calciner in a separate system, means for separating the cement raw meal thus subjected to further heating, means for recirculating the separated cement raw meal to the calciner, and means for extracting from the plant at least a portion of the gases diverted from calciner with a view to storage in the underground or other additional treatment.

12. An plant according to claim 11, **characterized in** that it comprises means for producing electricity by utilizing the gases diverted from the calciner.

13. An plant according to claim 11, **characterized in** that it comprises means for preheating cement raw meal in a substantially nitrogen-free preheater by utilizing the gases diverted from the calciner.

14. A plant according to any of the claims 11 to 13, **characterized in** that it comprises means for recirculating a portion of the gases diverted from the calciner to the gas inlet of the calciner.

15. A plant according to claim 14, **characterized in** that it comprises means for bringing the recirculated gases into contact with the cement clinker.

16. A plant according to any of the claims 11 to 15, **characterized in** that it comprises means for adding water and/or water vapours to the calciner and/or the gases which are diverted from the calciner.

17. A plant according to claim 14 or 15, **characterized in** that it comprises means for adding water and/or water vapours to the gases which are recirculated to the calciner.

18. A plant according to any of the claims 11 to 17, **characterized in** that it comprises means for adding fuel to the calciner and/or the gases which are diverted from the calciner.

19. A plant according to claims 14, 15 or 17, **characterized in** that it comprises means for adding fuel to the gases which are recirculated to the calciner.

Fig. 1

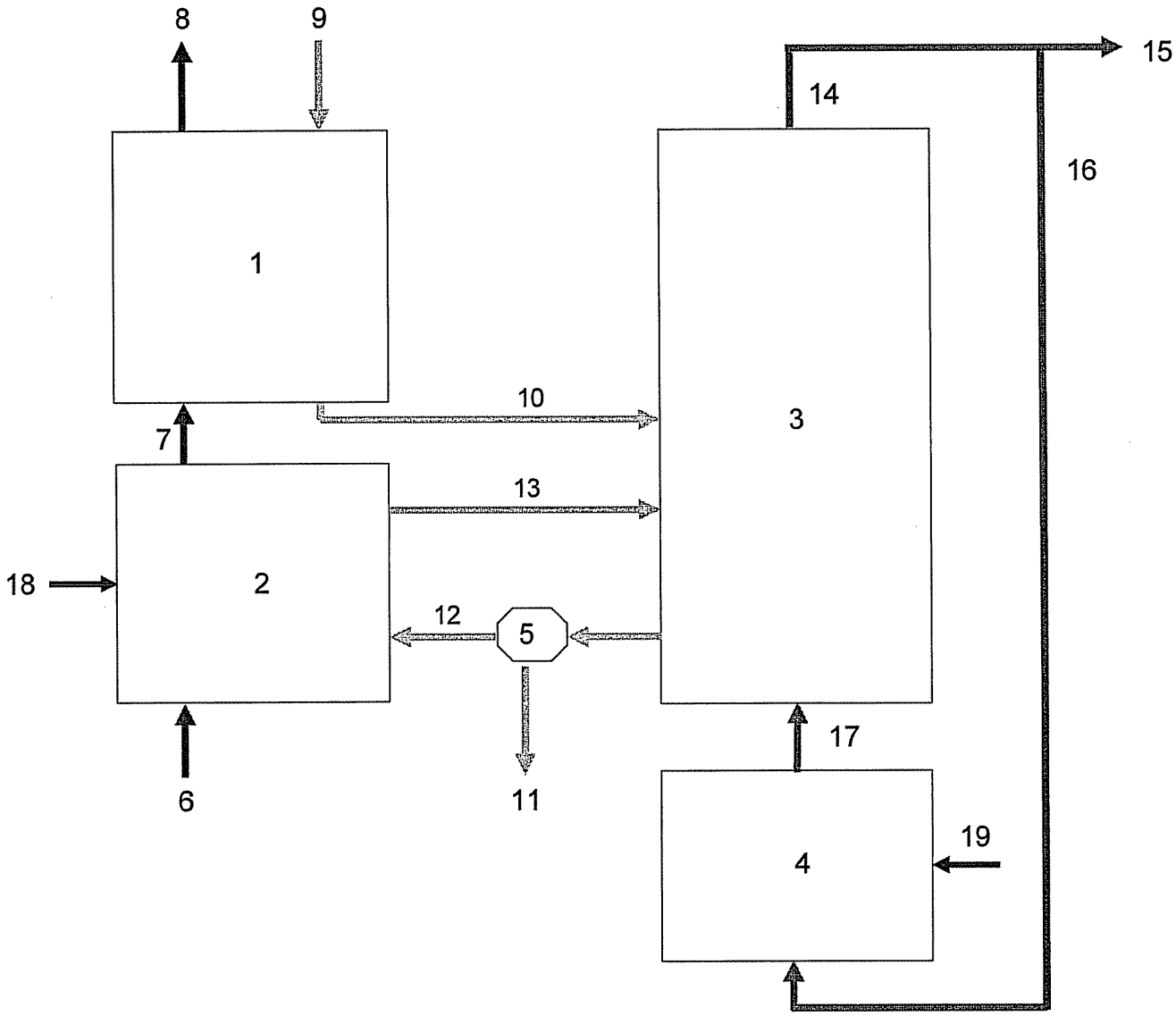

Fig. 2

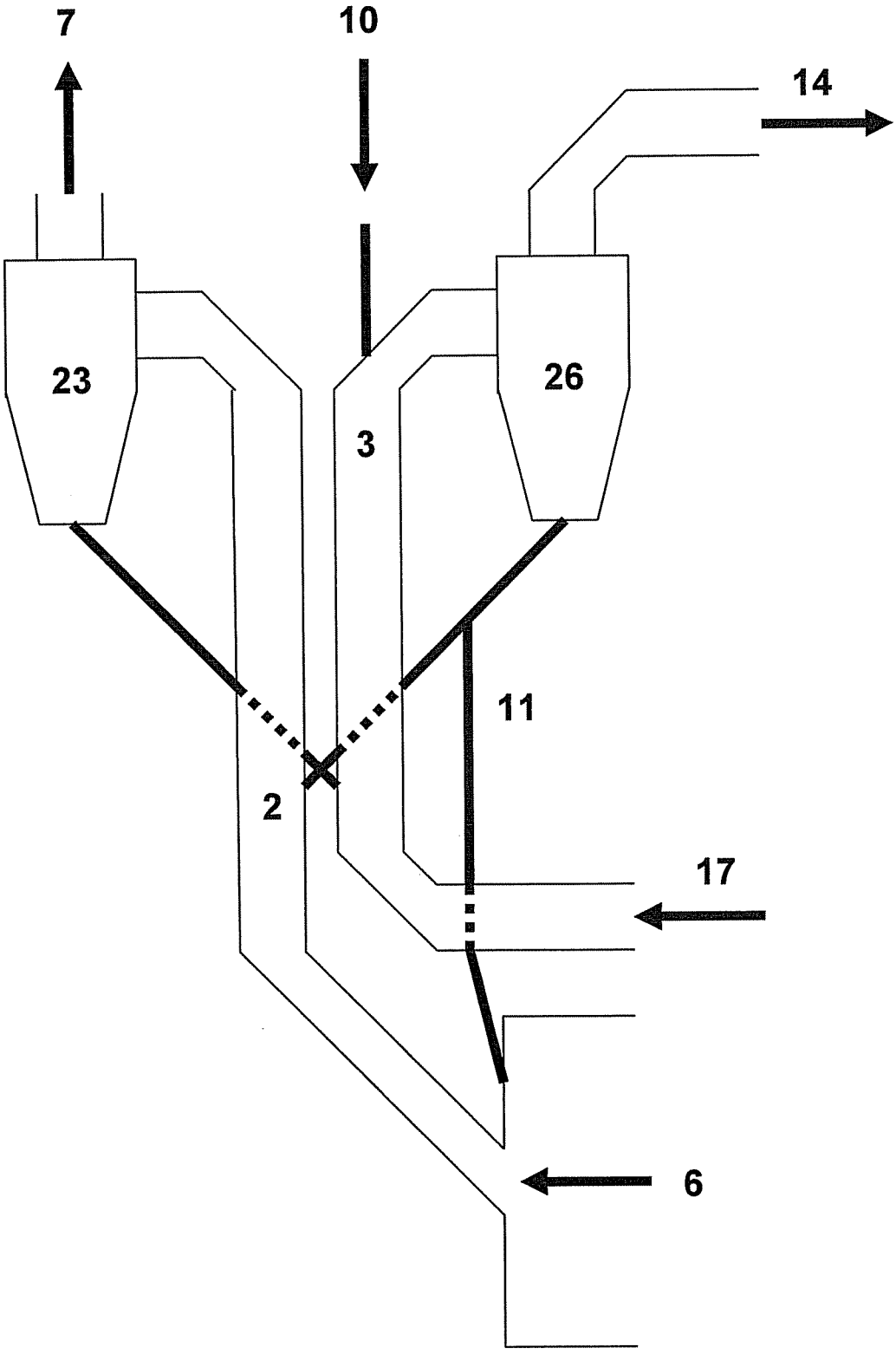

Fig. 3

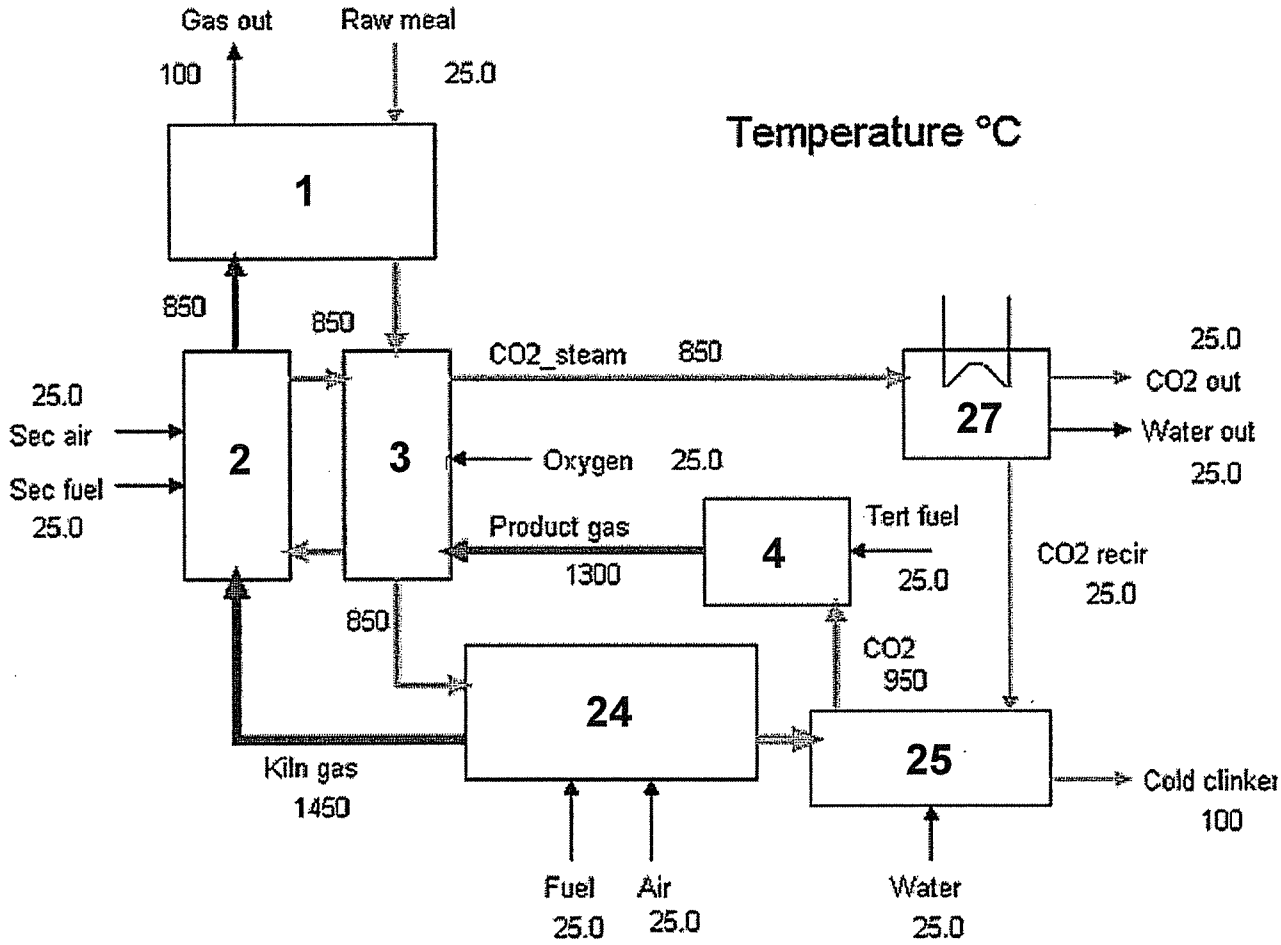
Gas out
100
Raw meal
25.0
Temperature °C
1
850
850
CO2_steam 850
25.0
CO2 out
27
Water out
25.0
25.0
Sec air
Sec fuel
25.0
2
3
Oxygen 25.0
Product gas
1300
4
Tert fuel
25.0
CO2 recir
25.0
850
CO2
950
24
25
Cold clinker
100
Kiln gas
1450
Fuel
25.0
Air
25.0
Water
25.0

INTERNATIONAL SEARCH REPORT

International application No
PCT/EP2009/055689

A. CLASSIFICATION OF SUBJECT MATTER
INV. F27B7/20 C04B7/43 C04B18/16 C04B7/36

According to International Patent Classification (IPC) or to both national classification and IPC

B. FIELDS SEARCHED

Minimum documentation searched (classification system followed by classification symbols)
F27B C04B

Documentation searched other than minimum documentation to the extent that such documents are included in the fields searched

Electronic data base consulted during the international search (name of data base and, where practical, search terms used)
EPO-Internal, WPI Data, PAJ

C. DOCUMENTS CONSIDERED TO BE RELEVANT

Category*	Citation of document, with indication, where appropriate, of the relevant passages	Relevant to claim No.
A	DE 31 23 998 A1 (THAELMANN SCHWERMASCHBAU VEB [DD]) 15 April 1982 (1982-04-15) figure 3 page 10 - page 12	1-19

☐ Further documents are listed in the continuation of Box C.

☒ See patent family annex.

* Special categories of cited documents :

"A" document defining the general state of the art which is not considered to be of particular relevance

"E" earlier document but published on or after the international filing date

"L" document which may throw doubts on priority claim(s) or which is cited to establish the publication date of another citation or other special reason (as specified)

"O" document referring to an oral disclosure, use, exhibition or other means

"P" document published prior to the international filing date but later than the priority date claimed

"T" later document published after the international filing date or priority date and not in conflict with the application but cited to understand the principle or theory underlying the invention

"X" document of particular relevance; the claimed invention cannot be considered novel or cannot be considered to involve an inventive step when the document is taken alone

"Y" document of particular relevance; the claimed invention cannot be considered to involve an inventive step when the document is combined with one or more other such documents, such combination being obvious to a person skilled in the art.

"&" document member of the same patent family

Date of the actual completion of the international search	Date of mailing of the international search report
17 August 2009	24/08/2009

Name and mailing address of the ISA/	Authorized officer
European Patent Office, P.B. 5818 Patentlaan 2 NL - 2280 HV Rijswijk Tel. (+31-70) 340-2040, Fax: (+31-70) 340-3016	Peis, Stefano

INTERNATIONAL SEARCH REPORT

Information on patent family members

International application No
PCT/EP2009/055689

Patent document cited in search report	Publication date	Patent family member(s)	Publication date
DE 3123998 A1	15-04-1982	AT 377249 B	25-02-1985
		CU 35502 A1	05-05-1983
		DK 334281 A	31-01-1982
		FR 2487814 A1	05-02-1982
		GB 2081855 A	24-02-1982
		GR 74302 A1	22-06-1984
		IN 154631 A1	24-11-1984
		RO 85600 A1	24-01-1985
		YU 182681 A1	30-09-1983
		YU 41790 B1	31-12-1987