Feb. 29, 1944. C. E. WADE 2,342,711

LINE CONNECTOR

Filed March 31, 1939

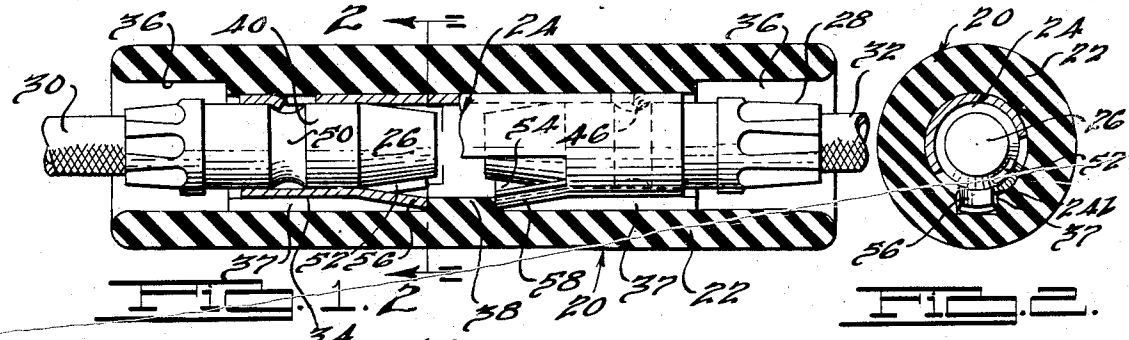

FIG. 1.

FIG. 2.

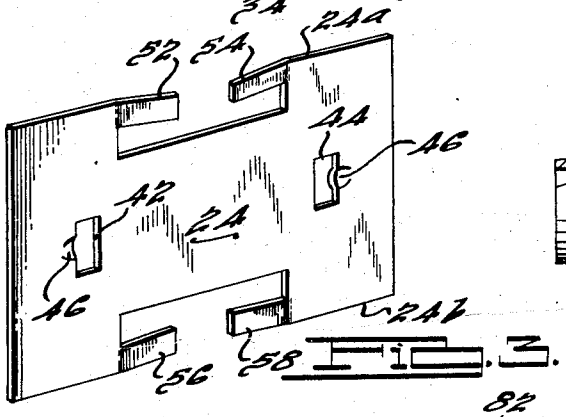

FIG. 3.

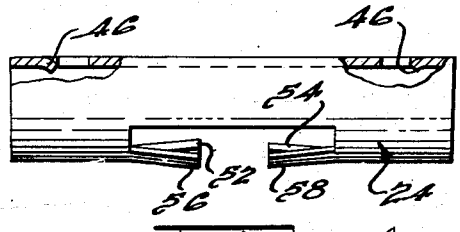

FIG. 4.

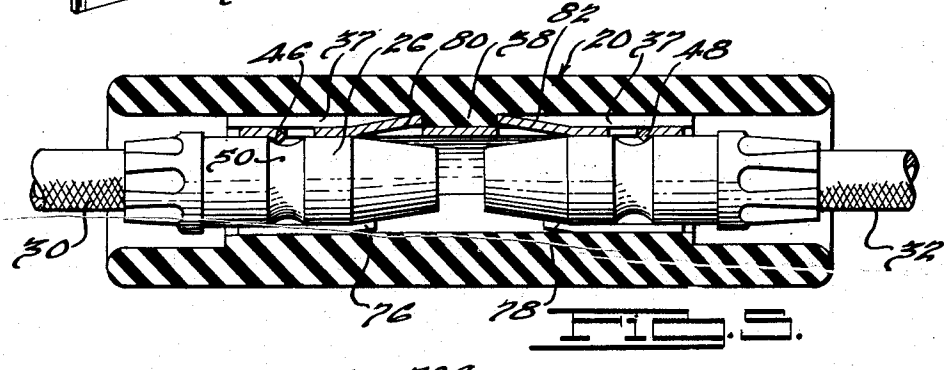

FIG. 5.

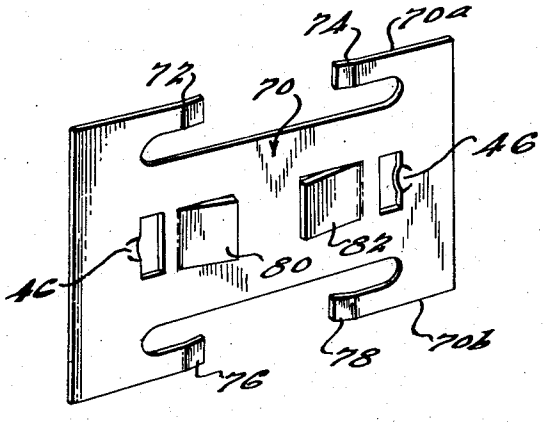

FIG. 6.

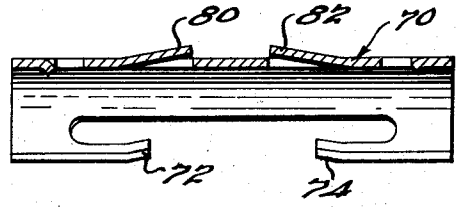

FIG. 7.

INVENTOR
Charles E. Wade.
BY Harness, Dickey & Pierce.
ATTORNEYS.

Patented Feb. 29, 1944 2,342,711

UNITED STATES PATENT OFFICE

2,342,711

LINE CONNECTOR

Charles E. Wade, Sturgis, Mich.

Application March 31, 1939, Serial No. 265,313

1 Claim. (Cl. 173—328)

The present invention relates to devices for forming a connection between one or more pairs of electrical conductors, and in particular provides improved devices of the just mentioned character embodying a contact adapted to interlockingly receive and form a connection between the terminals associated with such conductors.

The principal objects of the invention are to provide devices of the above indicated type, for forming a connection between one or more pairs or an odd number of related electrical conductors, which is extremely economical of manufacture; to provide such devices which enable the connections to be formed with or without the use of tools; to provide such devices which require very light pressures to form the connections, but require a relatively substantial force to separate the connections; and to provide such devices arranged to provide an extremely good electrical contact between each pair of conductors, so as to minimize the milli-volt loss through the devices.

Further objects of the present invention are to provide devices of the above generally indicated character, each comprising a sleeve-like member, the opposite ends whereof are open and adapted to receive snap type terminals; to provide such devices including a spring-like contact member received within the body of the sleeve, the opposite ends whereof are adapted to interlock with snap type terminals formed at the ends of the associated conductors; to provide such a device in which the contact member within the body of the sleeve is so formed as to have an interlocking connection with the sleeve, so that it may freely be snapped into place within the sleeve and when so received, is positively held in place therein; to provide such a structure wherein the body of the sleeve is provided with a radially inwardly extending enlargement and wherein the contact member is provided with one or more tongues adapted to be interlocked with the enlargement; and to provide such structures of generally improved construction.

With the above as well as other objects in view, which appear in the following description and in the appended claim, preferred but illustrative embodiments of the invention are shown in the accompanying drawing, throughout the several views of which corresponding reference characters are used to designate corresponding parts and in which:

Figure 1 is a view in longitudinal section, of a preferred embodiment of the invention;

Fig. 2 is a view in vertical transverse section, taken along the line 2—2 of Fig. 1;

Figs. 3 and 4 are views of the contact member employed in the construction of Figs. 1 and 2;

Fig. 5 is a view in longitudinal section, of a modified embodiment of the invention; and

Figs. 6 and 7 are views of the contact member employed in the construction of Fig. 5.

It will be appreciated from a complete understanding of the present invention that the improvements thereof may be embodied in line connectors or equivalent devices of widely differing forms and intended for use in widely differing applications. In an illustrative but not in a limiting sense, it is noted that the devices in question are widely used in the lighting systems of automotive vehicles wherein, for example, it is desired to form a connection between a conductor initially assembled with the vehicle body and a conductor initially assembled with the vehicle frame.

The rapid production schedules and the highly competitive conditions in the automotive industry have made essential the production of a line connection which is extremely small, light in weight, low in cost, and which may be applied to the associated conductors with or without the use of any tools. Moreover, service conditions require connections between the associated conductors which require a substantial pull or force to separate the conductors and at the same time the connection must be one to which the conductors can be connected with the minimum effort so as to avoid bending the relatively flexible conductors during the assembly process and to also avoid damage to the connector itself as a part of the assembly process. In addition, the line connector is required to provide an extremely efficient electrical contact so as to minimize the milli-volt drop through the connector. The present constructions have been found in practice to fully meet the above requirements.

Referring first to the embodiment of Figs. 1 through 4, the device which is designated as a whole as **20**, comprises generally an outer sleeve or insulating body **22**, and an inner contact member designated as a whole as **24** which is adapted to receive and interlockingly engage the usual snap type terminals **26** and **28**, associated with the conductors **30** and **32**, between which the line connector **20** is intended to form a connection.

As will be understood, the sleeve or outer body **22** may be formed of any suitable insulating material, such for example as the compositions sold commercially under the names Bakelite, Tenite, and the like. In the present instance, the connector **20** is intended to form a connection between a single pair of conductors so that

the sleeve 22 is of generally cylindrical form, having a bore 34 of substantially uniform diameter extending throughout the length thereof, and having counterbored end portions 36, of slightly larger diameter than the main bore 34, so as to facilitate the initial guiding of the terminals 26 and 28 thereinto. It will be appreciated that where it is desired to form the connectors to provide a connection between two or more related pairs of conductors or an odd number of conductors, the outer sleeve is correspondingly formed to provide two or more bore portions, similar to the bore 34, in the manner described in applicant's copending application Serial No. 224,851, filed August 15, 1938, now Patent No. 2,257,317, dated Sept. 30, 1941. One side of the bore 34 is provided with grooves 37 which extend inwardly from each end, and define between them a boss 38 of relatively short axial length, which is positioned substantially midway between the ends of the sleeve 22, for cooperation with the contact member 24, as hereinafter described.

The contact 24, preferably composed of copper or other good conducting material, is illustrated as being formed by a suitable stamping operation, from an initially plane sheet of stock, of a length slightly less than the length of the bore portion 34, and of a width such that when it is rolled into the cylindrical form shown in Figs. 1 and 2, the diameter thereof is slightly less than the diameter of the portion 40 of each snap type terminal 26 and 28 with which it is adapted or intended to be used. With this relation, when such snap type terminal is inserted into the body of the contact 24, it is sprung to a slightly larger size, leaving the opposite edges 24*a* and 24*b* thereof (Fig. 3) in slightly spaced relation.

In order to adapt the contact 24 to interlockingly engage the associated snap type terminal 26 and 28, the body thereof is provided with openings 42 and 44 adjacent the ends thereof, the axially outer walls whereof are indented to provide tongues 46, which, in use, extend into circumferential grooves such as 50, formed on the terminals 26 and 28. With this relation, it will be understood that when a terminal, such as 26, is introduced into the body of the contact 24, the tapered nose of the terminal passes over the associated tongue 46, until such a time as the groove 50 in the body thereof comes into registry with the tongue. At this time, the tongue enters the groove and so is effective to prevent the terminal from being withdrawn from the contact. In the illustrated instances, only a single tongue 46 is illustrated for association with each terminal although it will be understood that in practice a plurality of such tongues may be provided if desired.

The body of the contact 24 is cut away at the respectively opposite side thereof to define two pairs of longitudinally extending fingers, the fingers of one pair being designated 52 and 54, and the fingers of the other pair being designated 56 and 58. In the completely formed contacts, the fingers 52 and 54 are bent slightly radially inwardly, and thus yieldingly engage the tapered nose of the corresponding snap type terminal. The other fingers 56 and 58, in turn, are bent slightly outwardly, and interlock with the opposite ends of the previously mentioned boss 38 formed in the body of the sleeve 22.

Considering now the preferred mode of assembling and using the connector 20, it will be appreciated that the contact member 24 is completely formed and rolled into the generally cylindrical form shown in Fig. 4 as a separate operation, and that thereafter, it is inserted into the body of the sleeve 20. The free diameter of the contact 24 is such that it is relatively freely but snugly received within the bore 34 of the sleeve 20, and the fingers 56 and 58 are, of course, of such widths that they are freely received within the grooves 37 formed in the wall of the bore 34. The contact 24 may, therefore, be freely inserted into the body of the sleeve and moved therealong until such a time as the leading finger 56 or 58, as the case may be, engages the boss 38. Continued movement of the contact 24 cams such leading finger 56 or 58 radially inwardly, enabling it to pass over the inner surface of the boss 38. As soon as the continued movement of the contact brings such leading finger past the end of the boss 38, it is enabled to again spring outwardly to the position shown in Fig. 1, at which time the trailing finger 56 or 58 is in closely spaced relation to the leading edge of the boss 38. In the assembled position of the parts, therefore, the boss 38 is received between the fingers 56 and 58, which fingers cooperate therewith to positively prevent withdrawal of the contact 24 from the lead 22. In such position also the body of the contact 24 which is diametrically opposite the fingers 56 and 58 lies in relatively freely abutting relation to the corresponding wall portion of the bore 34 and so prevents the fingers 56 and 58 from passing over the boss 38.

In applying a conductor such as 30 or 32 to the thus completely assembled line connector, it will be understood that the body of the conductor may be grasped, either by a tool or manually, at a point adjacent the snap terminal thereof, so as to introduce the tapered nose of the terminal into the body of the contact 24. During this initial movement, the tapered nose of the snap terminal cammingly enlarges the diameter of the contact 24, so that the latter grips the terminal and makes a good electrical contact therewith. The continued movement of the snap terminal into the body of the contact 24 finally brings the groove 50 associated therewith into registry with the corresponding tongue 46, which thereupon enters the groove, and so locks the terminal in place. The final movement of the terminal into the body of the contact, also brings the tapered nose thereof into engagement with the inwardly bent corresponding finger 52 or 54, which action tends to wedge the terminal between such tongue and the other tongue 46, so that the terminal is at all times firmly gripped by the contact. This relationship materially improves the electrical connection between the parts. It will be understood that the tapered nose of each contact facilitates the entry thereof into the body of the contact, and this entry may be further facilitated if desired by slightly thinning the metal of the contact adjacent the ends thereof so as to give the mouth of the contact a slightly tapered form.

Referring to the embodiment shown in Figs. 5, 6 and 7, it is desirable under certain conditions to supplement the holding action of the fingers 52 and 54 (Fig. 3) by means of an additional pair of fingers, in the relationship shown in the above identified copending application. In such instances, the body of the contact 70, is formed to define the two related pairs of fingers 72, 74, and 76 and 78, all whereof, in the completely formed contact structure, are bent slightly radially in-

wardly in the manner previously described with reference to fingers **52** and **54**, and serve to yieldingly grip the tapered nose of the snap terminal **26** at points on opposite sides of the open seam between the two edges **70***a* and **70***b* of the contact. In order to form the interlocking connection between the sleeve and the contacts, the sleeve is provided with grooves **37** extending inwardly from the ends thereof, so as to form the boss **38**, and the central body portion of the contact **70** is provided with a pair of fingers **80** and **82**, which, in the completely assembled position of parts, lie on opposite sides thereof and embrace the boss **38**, the holding action thus obtained being the same as in the embodiment of Figs. 1 through 4. In all other respects other than those mentioned above, the construction, assembly, and mode of use of the embodiment of Figs. 5, 6 and 7 preferably duplicate the embodiment of Figs. 1 through 4.

From the foregoing description, it will be appreciated that the present invention provides improved line connector constructions, characterized in that an interlocking connection is provided between the contact member and the outer enclosing sleeve which interlocking connection positively prevents withdrawal of the contact from the sleeve, while at the same time permitting ready assembly of the contact with the sleeve. In each instance, the assembly may be readily and economically made and is extremely satisfactory in service.

Although only several specific embodiments of the invention have been disclosed, it will be appreciated that further modifications in the form, number and arrangement of parts thereof may be made within the spirit and scope of the invention.

What is claimed is:

In an electrical connector for association with a pair of conductors each having a terminal, the combination of an outer body having an opening extending therethrough, a generally tubular contact member received within said opening and adapted to interlockingly receive one of said terminals in each end thereof, the inner wall of said opening having circumferentially aligned grooves formed therein extending inwardly from the ends with the inner ends thereof in spaced relation so as to define between the inner ends thereof a laterally inwardly extending holding part having a shoulder at each end thereof, and said contact member having bendable fingers formed thereon and spaced along the length thereof, said fingers being adapted to move in one or the other of said grooves during the movement of said contact into said outer body, and to interlock respectively behind said shoulders so as to hold said contact in place.

CHAS. E. WADE.