(12) UK Patent Application (19) GB (11) 2 188 183 (13) A

(43) Application published **23 Sep 1987**

(21) Application No **8706311**

(22) Date of filing **17 Mar 1987**

(30) Priority data

(31) **61/059995** (32) **18 Mar 1986** (33) **JP**

(71) Applicant
Citizen Watch Co Ltd,

(Incorporated in Japan),

1-1 2-chome Nishi-shinjuku, Shinjuku-ku, Tokyo, Japan

(72) Inventor
Akira Miyajima

(74) Agent and/or Address for Service
Langner Parry, 52/54 High Holborn, London WC1V 6RR

(51) INT CL[4]
G09G 3/36

(52) Domestic classification (Edition I)
G5C A310 A342 A365 A375 HB HE

(56) Documents cited
None

(58) Field of search
G5C
Selected US specifications from IPC sub-classes G09F G09G

(54) Matrix drive liquid crystal display device

(57) A liquid crystal display device in which each of the scanning electrodes 4y has a center portion 45, an upper projection 46 extending upward from the center portion and a lower projection 47 extending downward from the center portion, and two picture elements 4a and 4c; 4b and 4d are formed vertically each in an area comprising the upper projection and the center portion and an area comprising the lower projection and the center portion, and the phases in which the data to be given to the signal electrodes 41x, 42x, 43x and 44x are sampled from even scanning picture signals are made different from the phases in which the data to be given to the signal electrodes are sampled from odd scanning picture signals, so that when the scanning electrodes are selected, the data for four scans of picture signals are given to the signal electrodes connected to the picture elements 4a, 4b, 4c, 4d. The device according to the present invention has the same duty ratio as a prior art quadruplex matrix but picture element area, picture resolution and contrast are improved. The drive circuitry includes pulse width modulation for grey scale variation. Colour filters in red, green and blue may be provided.

FIG.4A

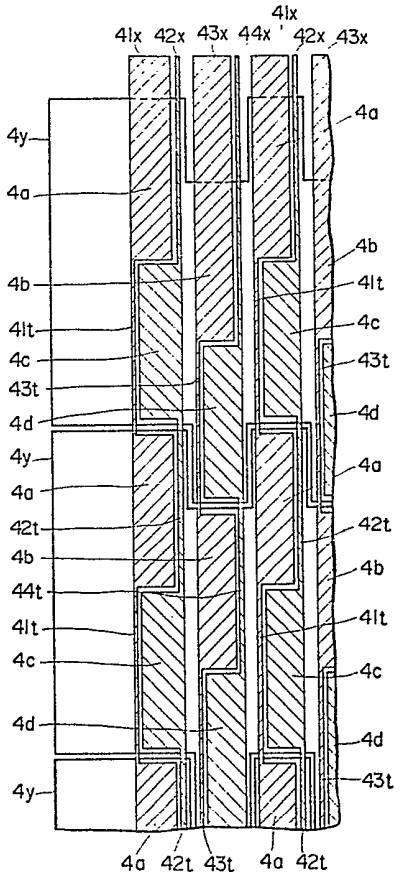

GB 2 188 183 A

FIG. 1 (PRIOR ART)

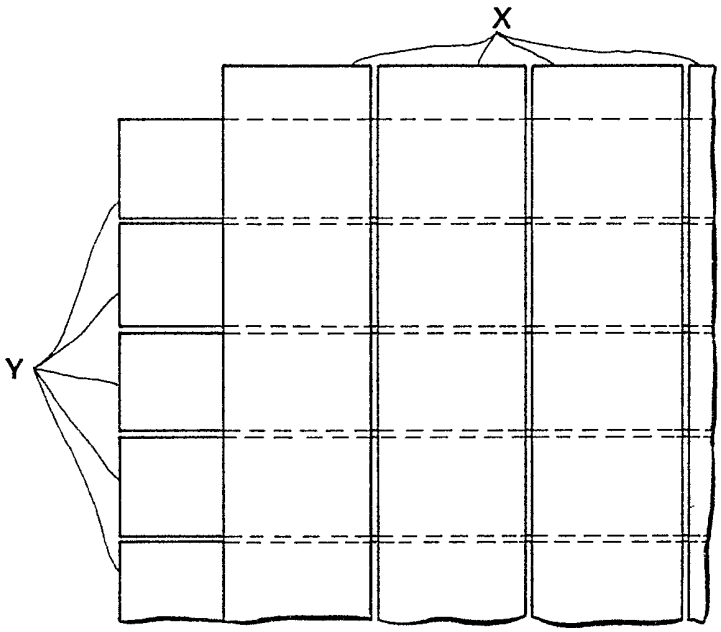

FIG. 2 (PRIOR ART)

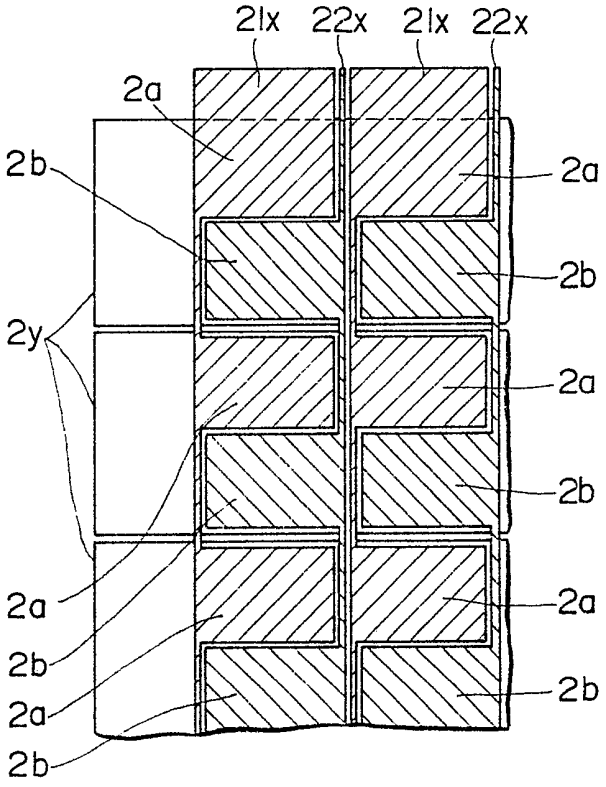

2188183

FIG.3 (PRIOR ART)

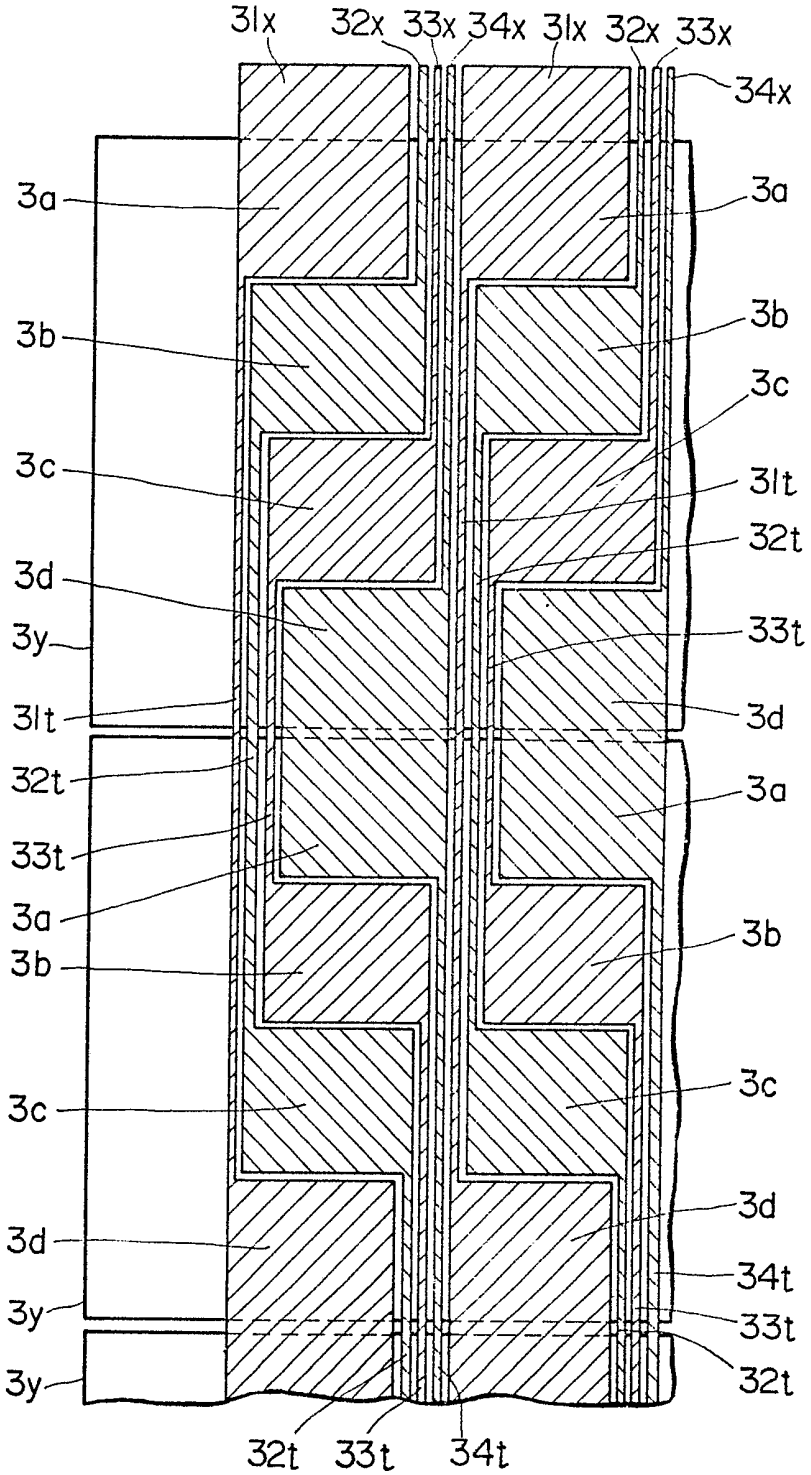

2133183

FIG.4A

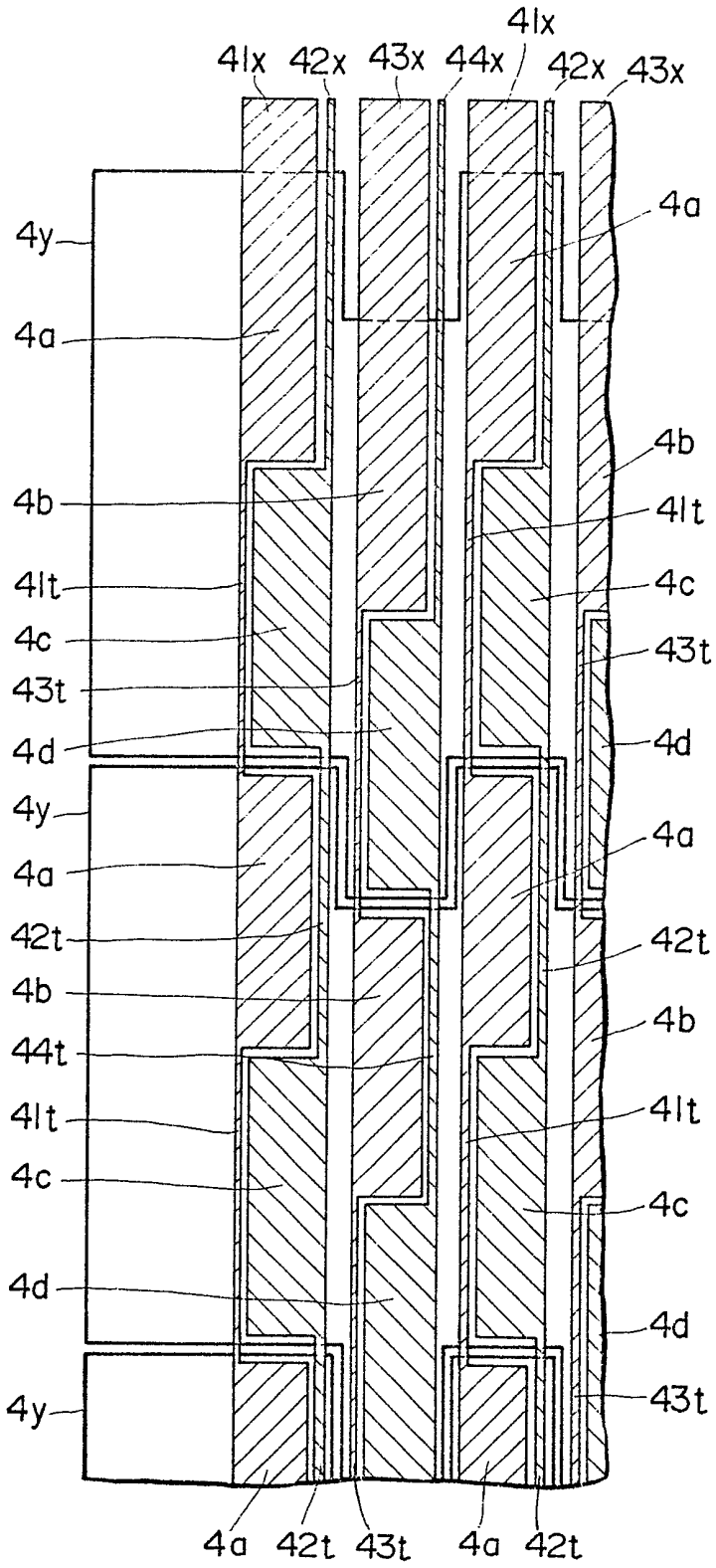

2188183

FIG.4B

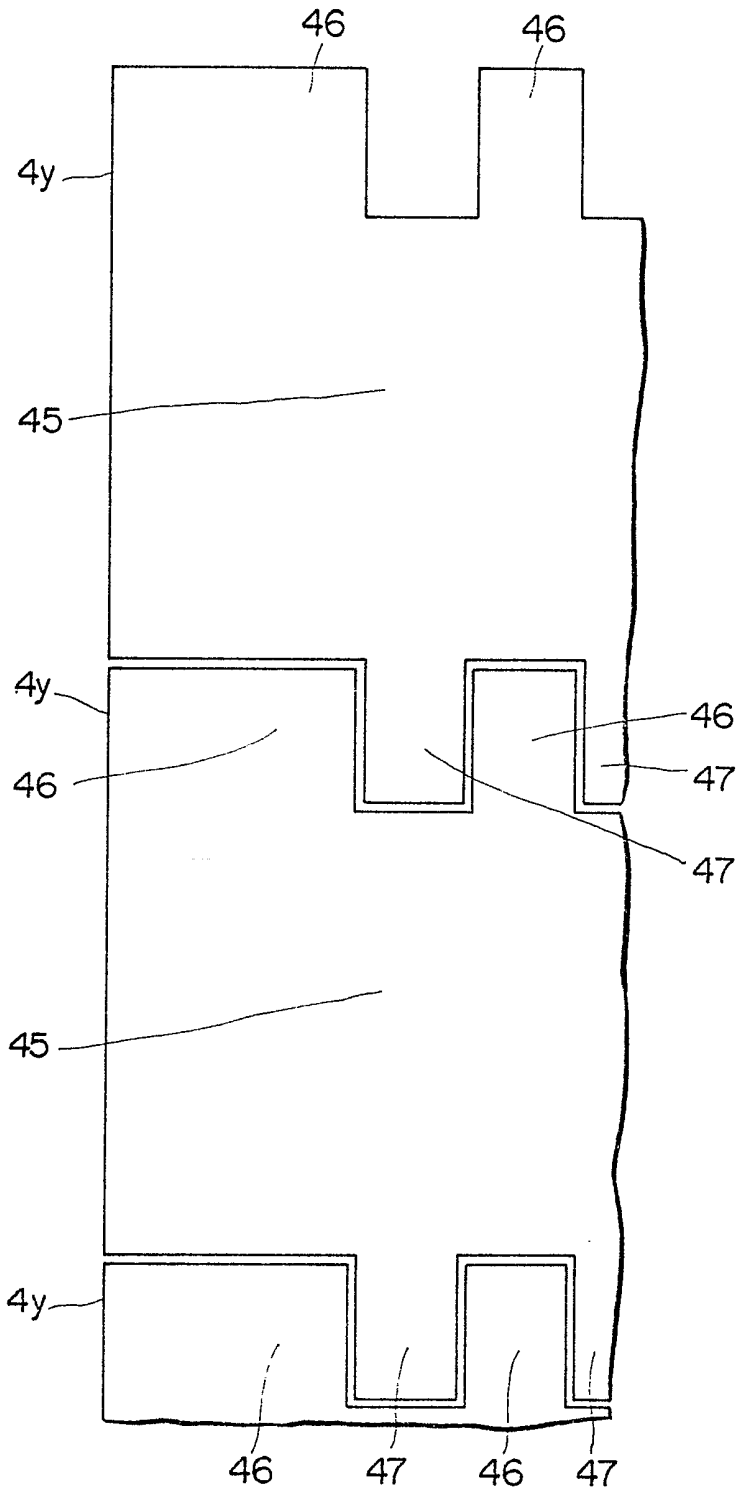

2188183

FIG.5

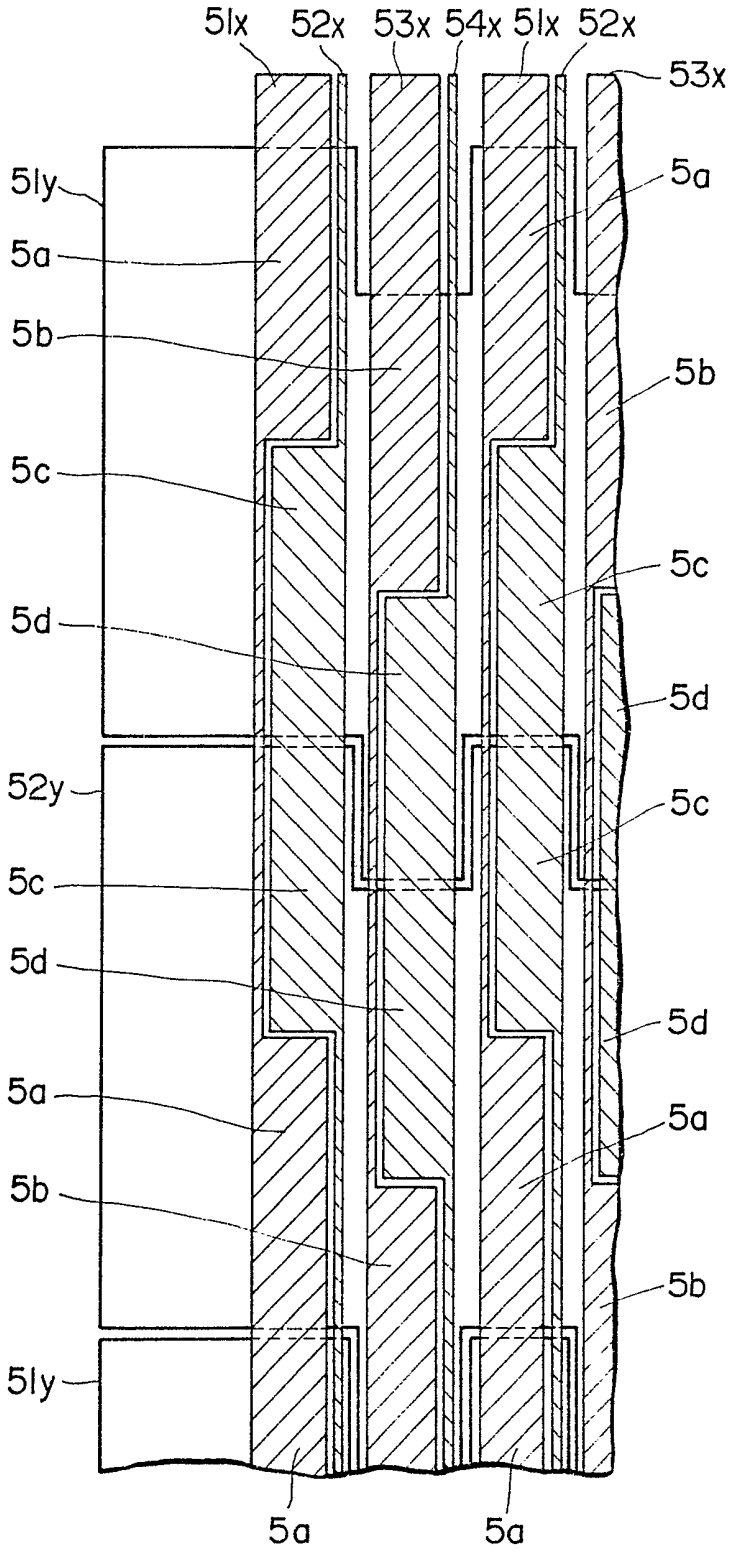

FIG.6

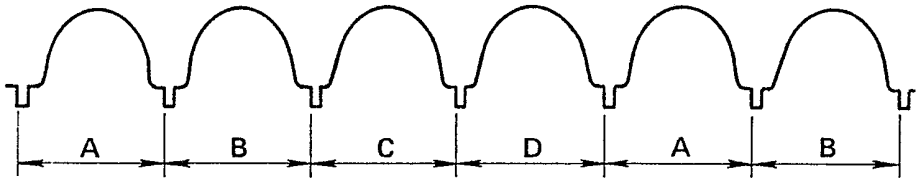

FIG.7

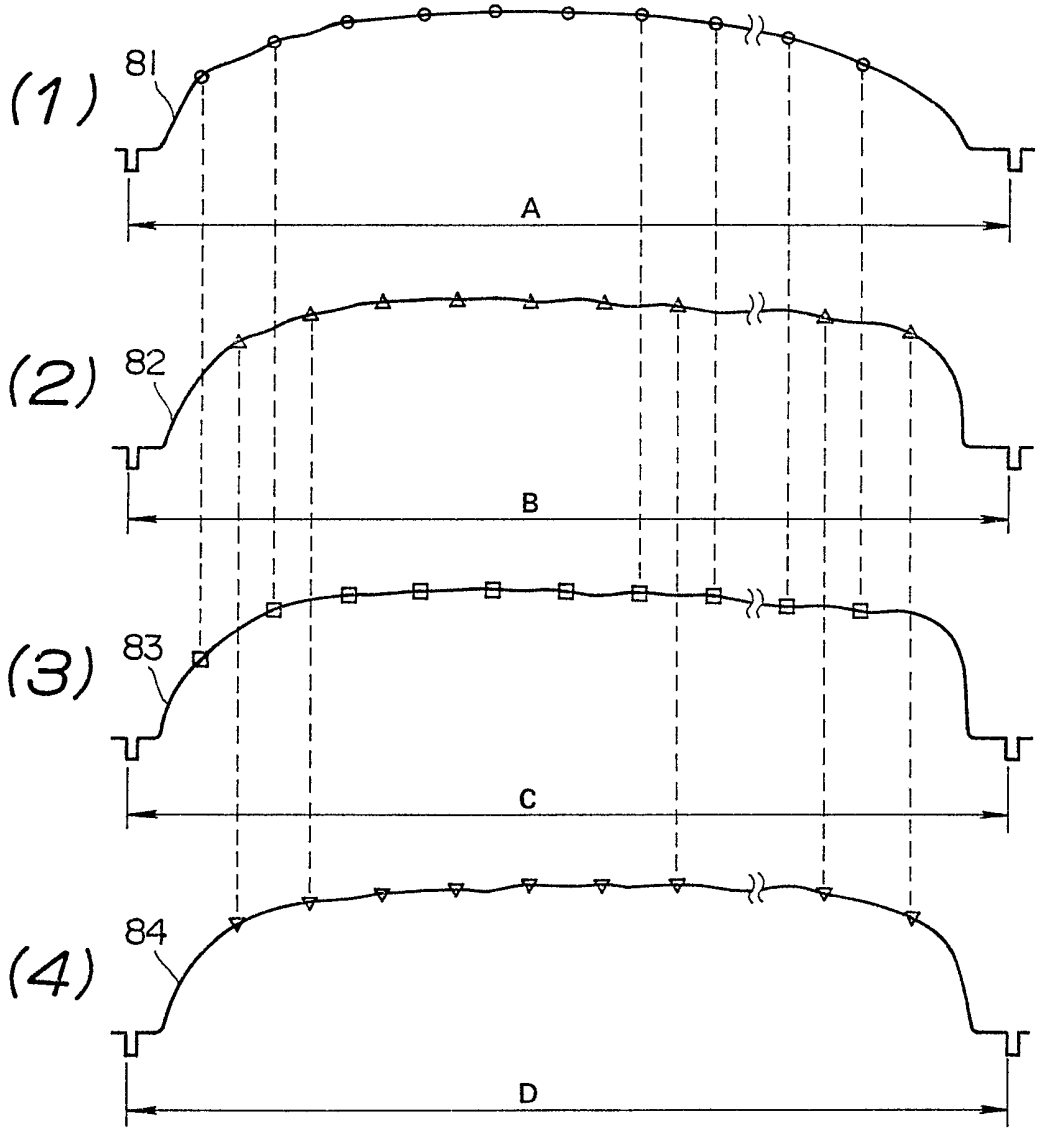

2188183

FIG.8

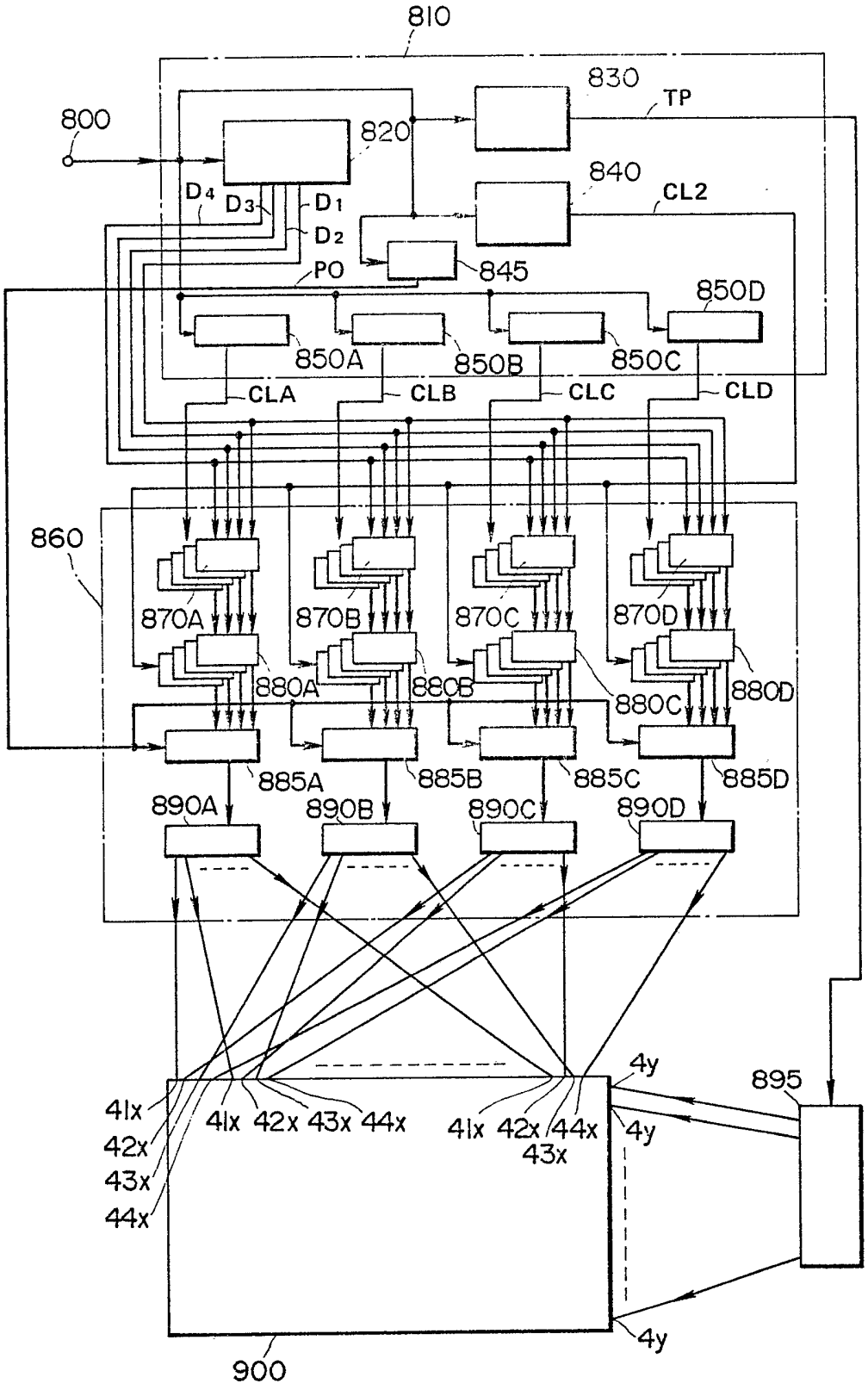

FIG.9

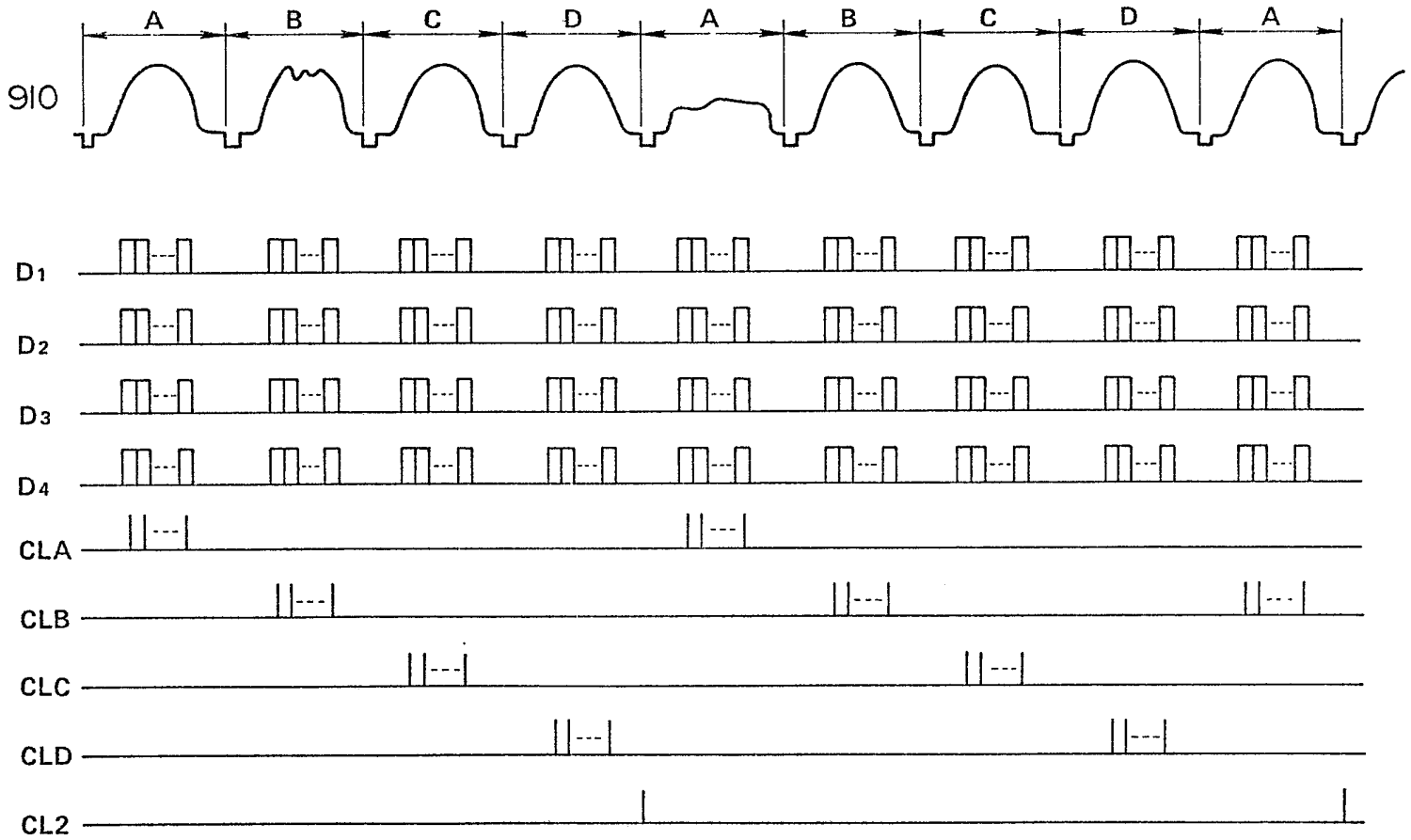

2133153

SPECIFICATION

Matrix drive liquid crystal display device

BACKGROUND OF THE INVENTION

1. *Field of the invention*

This invention relates to a multimatrix drive liquid crystal display device which is driven by a time-division driving method and provides high-quality pictures.

2. *Description of the related art*

In a liquid crystal display device which is driven by a time-division driving method, a simple matrix type or a double matrix type has been used, and a quadruplex matrix type has been used in order to double the number of vertical picture elements at a duty ratio equivalent to that of the double matrix type (U.S. Patent 4,481,511).

In general, the liquid crystal display device is constructed by injecting a liquid crystal between an upper substrate having a signal electrode and a lower substrate having a scanning electrode.

Figure 1 is a partially enlarged view of a conventional simple matrix type liquid crystal display device. In this Figure, x and y denote signal electrodes and scanning electrodes, respectively. Figure 2 is a partially enlarged view of a conventional double matrix type liquid crystal display device. In Figure 2, 21x and 22x denote signal electrodes and 2y denotes scanning electrodes. Overlapping parts of signal electrodes 21x and 22x with the scanning electrodes 2y form picture elements 2a and 2b arranged in a vertical direction. As compared with the liquid crystal display device shown in Figure 1, the liquid crystal display device shown in Figure 2 has a double duty ratio when the number of vertical picture elements is the same. However, if the vertical picture elements are further increased in number, owing to the time-division driving, the duty ratio is decreased, and as a result, the contrast deteriorates and the viewing angle is restricted, thus deteriorating the picture images produced on the liquid crystal device. Thus, each of the conventional liquid crystal devices shown in Figures 1 and 2 has a limit to the picture quality.

On the other hand, in order to increase a duty ratio twice as high as that of the double matrix type, as shown in Figure 3, a quadruplex matrix type liquid crystal display device has been proposed. 31x, 32x, 33x and 34x are signal electrodes, respectively, 3y is scanning electrodes, and 3a, 3b, 3c and 3d are picture elements. In Figure 3, connections 31t, 32t, 33t and 34t increase between the picture elements which form signal electrodes, compared with those of Figure 2. As a result, when patterning the signal electrodes, breaking of wire and leaks are apt to take place to decrease the yield. Furthermore, the non-picture area increases, so that the total area of picture elements occupied on the entire liquid crystal display surface decreases. As a result, the picture images roughen and the picture quality deteriorates.

Summary of the invention

The object of the invention is to provide a liquid crystal display device having high picture quality of a good contrast without any reduction in duty ratio.

As a trial to attain this object, United States Patent Application Serial No. 919,659 was filed on October 16, 1986. In order to develop the invention of the above application to the higher degree, the present invention was made to provide a liquid crystal display device of higher picture quality and a method of driving the same.

In a liquid crystal display device according to the invention, each of scanning electrodes comprises a center portion, an upper projection extending upward from the center portion, and a lower projection extending downward from the center portion, and two picture elements are arranged vertically each in an area comprising the upper projection and the center portion and an area comprising the lower projection and the center portion, and the phases in which the data to be given to the signal electrodes are sampled from even scanning picture signals are made different from the phases in which the data to be given to the signal electrodes are sampled from odd scanning picture signals, so that when the scanning electrodes are selected, the sampled data for four scans are given to the signal electrodes.

Brief description of the drawings

Figure 1 is a partially enlarged view of a display portion of a conventional simple matrix type liquid crystal display device;

Figure 2 is a partially enlarged view of a display portion of a conventional double matrix type liquid crystal display device;

Figure 3 is a partially enlarged view of a display portion of a conventional quadruplex matrix type liquid crystal display device;

Figure 4A is a partially enlarged view of a display portion of a first embodiment of a liquid crystal display device according to the present invention;

Figure 4B is a partially enlarged view of the scanning electrodes of the liquid crystal display device of Figure 4A;

Figure 5 is a partially enlarged view of a display portion of a second embodiment of a liquid crystal display device according to the present invention;

Figure 6 is a view of picture signals;

Figure 7 is a partially enlarged view of picture signals for respective scans representing the sampling method in driving the liquid crystal display device according to the present invention;

Figure 8 is a view of a drive circuit for displaying pictures on the liquid crystal display device according to the present invention; and

Figure 9 shows signals at main parts of the drive circuit of Figure 8.

Detailed description of the preferred embodiments

Embodiments of the invention will now be described with reference to the drawings, in which

Figure 4A and 4B show a structure of a first embodiment of a liquid crystal display device according to the invention, in which Figure 4B shows only scanning electrodes. In Figure 4B, 4y denotes scanning electrodes each of which is formed in a

horizontal direction and has upper projections 46 and lower projections 47 with respect to a center portion 45. In Figure 4A, 41x, 42x, 43x and 44x are signal electrodes which are shown in slant lines. In the area comprising the upper projections 46 and the center portion 45 of each scanning electrode 4y, the signal electrodes 41x and 42x have intersections with the scanning electrodes 4y and form picture elements 4a and 4c, respectively. Each picture element 4a is placed above each picture element 4c. In the area comprising the lower projections 47 and the center portion 45 of each scanning electrode 4y, the signal electrodes 43X and 44X have intersections with the scanning electrodes 4y and form picture elements 4b and 4d, respectively. Each picture element 4b is placed above each picture element 4d. In the single scanning electrode 4y, the y-coordinate of the center of gravity of the picture element 4b is positioned at a middle point between the y-coordinate of the center of gravity of the picture element 4a and the y-coordinate of the center of gravity of the picture element 4c, and the y-coordinate of the center of gravity of the picture element 4c is positioned at a middle point between the y-coordinate of the center of gravity of the picture element 4b and the y-coordinate of the center of gravity of the picture element 4d.

Next, a method of displaying pictures onto the liquid crystal display device according to the present invention shown in Figure 4A will be explained. Figure 6 shows signals for the pictures to be displayed on the liquid crystal display device, in which the horizontal direction represents time and the vertical direction represents the amplitude of the signal. In Figure 6, A, B, C and D each shows one horizontal scanning interval. The picture signal of each of the first scan A, the second scan B, the third scan C, and the fourth scan D is enlargedly shown in Figure 7 (1), (2), (3) and (4).

In the first scan A shown in Figure 7 (1), the values of a picture signal 81 marked with circles are sampled so as to correspond to the positions of the picture elements 4a of Figure 4A, and the data are temporarily stored in memory. In the second scan B shown in Figure 7 (2), the values of a picture signal 82 marked with triangles are sampled so as to correspond to the positions of the picture elements 4b of Figure 4A, out of phase by an angle of π with the first scan A, and the data are temporarily stored in memory. In the third scan C shown in Figure 7 (3), the values of a picture signal 83 marked with squares are sampled so as to correspond to the positions of the picture elements 4c of Figure 4A, in phase with the first scan A, and the data are temporarily stored in memory. In the fourth scan D shown in Figure 7 (4), the values of a picture signal 84 marked with inverted triangles are sampled so as to correspond to the positions of the picture elements 4d of Figure 4A, in phase with the second scan B, and the data are temporarily stored in memory. When scanning electrodes 4y are selected, the data for the four scans are given to the signal electrodes at a time. That is to say, at the time of selection of the scanning electrodes 4y, the data sampled from the picture signals at the first scan A, the second scan B, the third scan C and the fourth scan D are sent to the signal electrodes 41x, 43x, 42x and 44x, and then pictures are displayed on picture elements 4a, 4b, 4c and 4d.

This operation will be discussed in detail.

Figure 8 is a view of a drive circuit for displaying pictures on the above liquid crystal display device. In this Figure, 900 denotes the liquid crystal display device shown in Figure 4, and 810 denotes a control integrated circuit (IC). The control IC controls a signal drive IC 860 and a scanning drive IC 895, and the outputs of the signal drive IC 860 and the outputs of the scanning drive IC 895 provide pictures on the liquid crystal display device. The control IC 810 comprises an A-D converter 820 for converting an analog picture signal into a 4-bit digital signal; a timing control signal generating circuit 830 for generating a timing control signal TP to make the scanning drive IC 895 start scanning; a latch clock generating circuit 840 for sending a latch clock signal CL2 to the scanning drive IC 860; a pulse width modulating signal generating circuit 845 for generating sixteen types of pulse width modulating signals PO; and sampling pulse generating circuits 850A, 850B, 850C and 850D for generating sampling pulse trains CLA, CLB, CLC and CLD.

There is the π phase difference (detailed in Figure 7) between the sampling pulse trains CLA and CLC generated by odd sampling pulse generating circuits 850A and 850C and the sampling pulse trains CLB and CLD generated by even sampling pulse generating circuits 850B and 850D.

The signal drive IC 860 comprises shift registers 870A, 870B, 870C and 870D; latch circuits 880A, 880B, 880C and 880D; pulse-width modulators 885A, 885B, 885C and 885D for producing signals representing sixteen types of tones by combining 4-bit outputs of the latch circuits with four types of pulse-width modulating signals PO sent from the pulse-width modulating signal generating circuit 845; and drivers 890A, 890B, 890C and 890D for generating drive pulses to drive the signal electrodes.

Next, the signal flow will be explained.

A picture signal 800 is converted from analog to digital by the A-D converter 820 into 4-bit data D_1, D_2, D_3, D_4, and the converted data are sent into shift registers 870A, 870B, 870C and 870D, respectively by sampling clock pulse trains CLA, CLB, CLC and CLD produced in the sampling clock generating circuits 850A, 850B, 850C and 850D. The contents of the shift registers 870A, 870B, 870C and 870D are stored in the latch circuits 880A, 880B, 880C and 880D, respectively by the output CL2 of the latch clock generating circuit 840. In the pulse-width modulators 885A, 885B, 885C and 885D, the 4-bit outputs of the latch circuits 880A, 880B, 880C and 880D are combined with the four types of pulse-width modulating signals PO produced in the pulse-width modulating signal generating circuit 845, thereby producing signals representing the sixteen tones. Then, drive pulses are produced by drivers 890A, 890B, 890C and 890D and sent into the respective signal electrodes 41x, 43x, 42x and 44x described with reference to Figure 4. The scanning device IC 895 scans the scanning electrodes 4y described with

reference to Figure 4 on the basis of the signal TP of the timing control signal generating circuit 830.

Figure 9 shows signals at main parts of the drive circuit. 910 is picture signals, and D_1, D_2, D_3 and D_4 are picture signals converted from analog to digital. Sampling clock pulses CLA, CLB, CLC and CLD are the respective pulse trains generated in horizontal scanning at the (4k+1)th interval A, the (4k+2)th interval B, the (4k+3)th interval C and the (4k+4)th interval D, where k=0 or a positive integer. The converted data groups D_1, D_2, D_3 and D_4 are successively sent into the shift registers 870A, 870B, 870C and 870D (Figure 8), and after the scannings at A, B, C and D are finished, the data for four scans are latched at a time by the output CL2 of the latch clock generating circuit 840.

Referring to Figure 5, there is shown a partially enlarged view illustrating a structure of a second embodiment of a liquid crystal display device according to the invention. Scanning electrodes 51y and 52y shown in heavy solid lines are of the similar shape to that of the scanning electrodes 4y of Figure 4B. 51x, 52x, 53x and 54x denote signal electrodes which are represented in slant lines. Overlapping parts of the scanning electrodes and signal electrodes form picture elements 5a, 5b, 5c and 5d as in Figure 4A. In the odd scanning electrodes 51y, like those in Figure 4A, the respective picture elements are formed. Unlike the scanning electrodes 51y, the scanning electrodes 52y in even numbers are arranged so that each picture element 5a is positioned below each picture element 5c and that each picture element 5b is positioned below each picture element 5d.

When pictures are displayed on the liquid crystal display device of the second embodiment shown in Figure 5 according to the present invention, the odd scanning electrodes perform the same operation as in Figure 4A. The data sampled from the picture signals at the first scan A, the second scan B, the third scan C and the fourth scan D in Figure 7 are sent to signal electrodes 51x, 53x, 52x and 54x, respectively and then displays are provided on picture elements 5a, 5b, 5c and 5d. On the other hand, in the even scanning electrodes 52y, the data sampled from picture signals at the first scan A, the second scan B, the third scan C and the fourth scan D in Figure 7 are sent to signal electrodes 52x, 54x, 51x and 53x and then displays are provided on picture elements 5c, 5d, 5a and 5b.

As clearly shown in the above description in the liquid crystal display devices according to the present invention, when compared with a liquid crystal display device equal in the total number of picture elements, the duty ratio is twice as high as that of the conventional double matrix type liquid crystal display device shown in Figure 2, and the same duty ratio is obtained as that of the conventional quadruplex matrix type liquid crystal display device shown in Figure 3.

As shown in Figures 4 and 5, when compared with the conventional double matrix type liquid crystal display device as shown in Figure 2, the liquid crystal display device according to the present invention has a duty ratio equivalent to that of the quadruplex matrix. As a result, since the ratio of ON to OFF voltage of the liquid crystal can be taken high, such effects are obtained as an improved contrast, a contrastive picture, less dependence of the liquid crystal on the viewing angle, a display permitting to be seen over a wide range in the vertical and horizontal directions, and a high-quality picture.

When compared with the overall length of picture element connections 31t, 32t, 33t and 34t of the signal electrodes 31x, 32x, 33x and 34x of the conventional quadruplex matrix type liquid crystal display device shown in Figure 3, the overall length of picture element connections 41t, 42t, 43t and 44t of signal electrodes 41x, 42x, 43x and 44x of the liquid crystal display device of the present invention shown in Figure 4A is extremely small. Therefore, in the liquid crystal display device of the present invention, when etching to make signal electrodes, the breaking of the connections between the picture elements and the leakage between the adjacent electrodes are materially reduced. Therefore, the yield of the liquid crystal display device is remarkably increased as compared with that of Figure 3. Furthermore, in comparison with the device of Figure 3, in the liquid crystal display device of the present invention, the area occupied by the connections between picture elements is smaller. Accordingly, not only an area for the single picture element but also the total area for each picture element covering the picture display screen is larger. As a result, the liquid crystal display device of the invention has the effect of producing a finer and higher-quality picture. Also, when the liquid crystal display device is designed to block the light with increase in the effective voltage applied between the scanning electrode and the signal electrode, the liquid crystal display device of the present invention has a less light leak, a superior shutter effect and an excellent contrast picture.

In addition, in the quadruplex matrix type liquid crystal display device shown in Figure 4, by use of N (positive integer) scanning electrodes, 4N horizontal lines can be displayed, but by use of M (positive integer) signal electrodes, only M/4 vertical lines can be displayed. On the other hand, in the liquid crystal display device according to the present invention, by use of N scanning electrodes, 4N horizontal lines can be displayed, while by use of M signal electrodes, M/2 vertical lines can be displayed. As a result, the resolution is increased so as to give the effect of producing finer picture displays. Furthermore, in a color liquid crystal display device having a color filter made of three colors of red, green and blue attached to the scanning electrodes or signal electrodes, there is also the effect of making hues better. Still more, when the number of picture elements is equal, the duty ratio of the present invention is twice as high as the invention shown in Figure 1 of U.S. Patent Application Serial No. 919,659. Thus the contrast of the present invention is improved, and the viewing angle is widened so as to provide pictures of high quality.

CLAIMS

1. A liquid crystal display device constructed by injecting a liquid crystal between a substrate having a signal electrode and a substrate having a scanning electrode, said scanning electrode including a center portion, an upper projection extending upward from said center portion, a lower projection extending downward from said center portion, two picture elements formed vertically each in an area comprising said upper projections and said center portion and an area comprising said lower projection and said center portion, wherein, in operation, when sampling data to be sent to the signal electrodes, the phases in which the data to be given to the signal electrodes are sampled from even scanning picture signals are made different from the phases in which the data to be given to the signal electrodes are sampled from odd scanning picture signals, so that when the scanning electrodes are selected, the sampled data for four scans of picture signals are given to said signal electrodes.

2. A liquid crystal display device according to claim 1, wherein said picture elements exist in position shifted by 1/2 pitch to each other vertically with respect to the picture elements adjacent horizontally.

3. A liquid crystal display device substantially as herein described with reference to and as illustrated in Figures 4A to 9 of the accompanying drawings.

Printed for Her Majesty's Stationery Office by
Croydon Printing Company (UK) Ltd, 8/87, D8991685.
Published by The Patent Office, 25 Southampton Buildings, London, WC2A 1AY,
from which copies may be obtained.