Aug. 4, 1936. J. G. C. MANTLE 2,050,230

METHOD OF MAKING DIAPHRAGMS OR THE LIKE

Filed Sept. 17, 1930 3 Sheets-Sheet 1

Fig. 1.

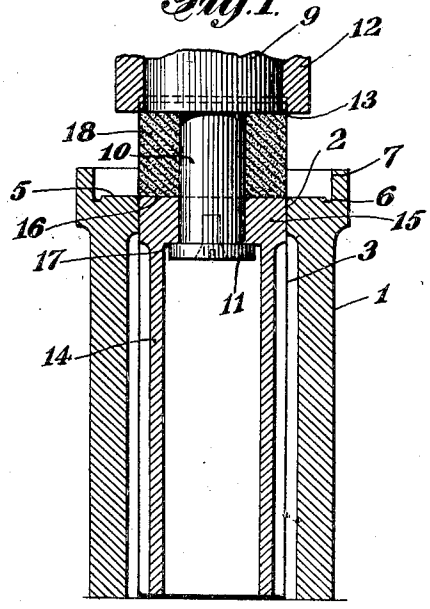

Fig. 2.

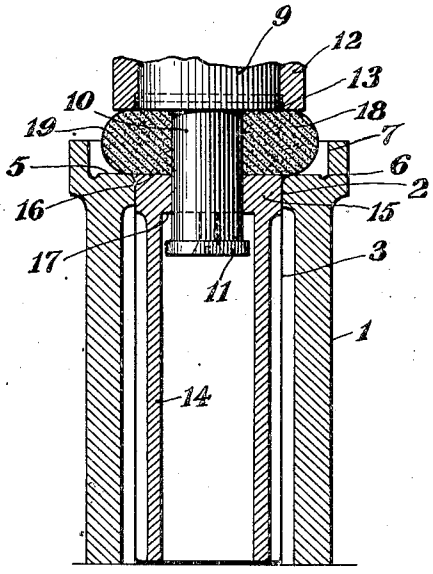

Fig. 3.

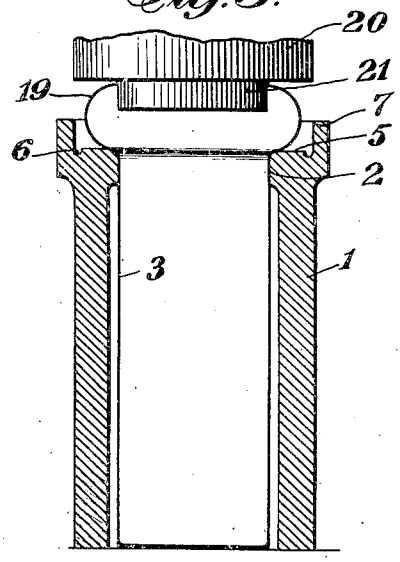

Fig. 4.

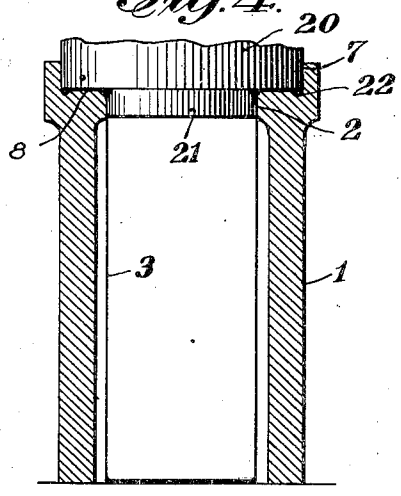

INVENTOR
Joseph G. C. Mantle
BY
Prindle Bean & Mann
ATTORNEY

Aug. 4, 1936. J. G. C. MANTLE 2,050,230

METHOD OF MAKING DIAPHRAGMS OR THE LIKE

Filed Sept. 17, 1930 3 Sheets-Sheet 2

Fig. 5.

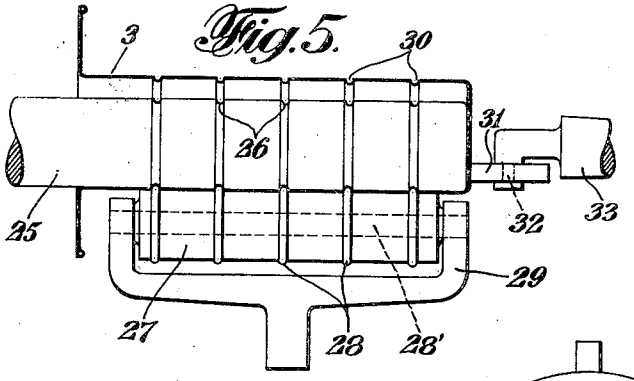

Fig. 6.

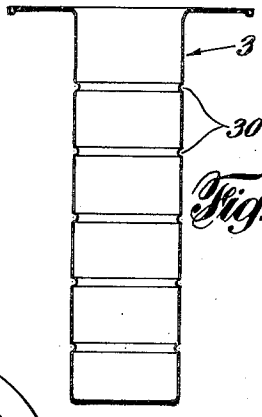

Fig. 9.

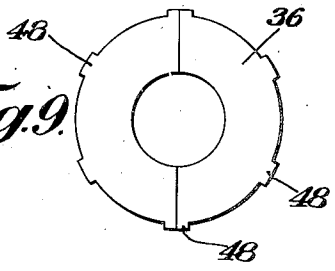

Fig. 10.

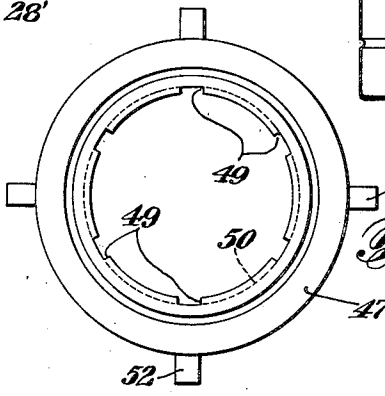

Fig. 7.

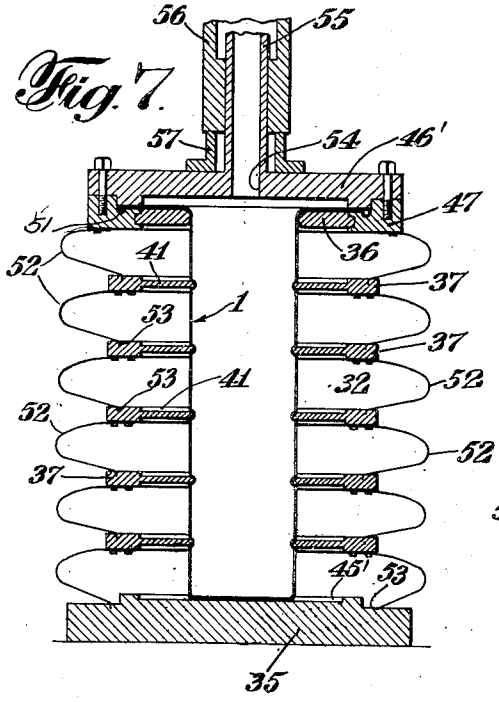

Fig. 8.

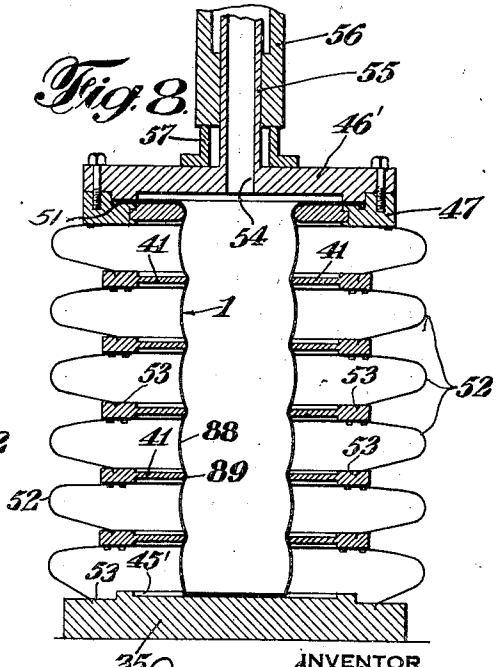

INVENTOR
Joseph G. C. Mantle
BY
Prindle Bean & Mann
ATTORNEY

Aug. 4, 1936. J. G. C. MANTLE 2,050,230

METHOD OF MAKING DIAPHRAGMS OR THE LIKE

Filed Sept. 17, 1930. 3 Sheets-Sheet 3

Fig. 11.

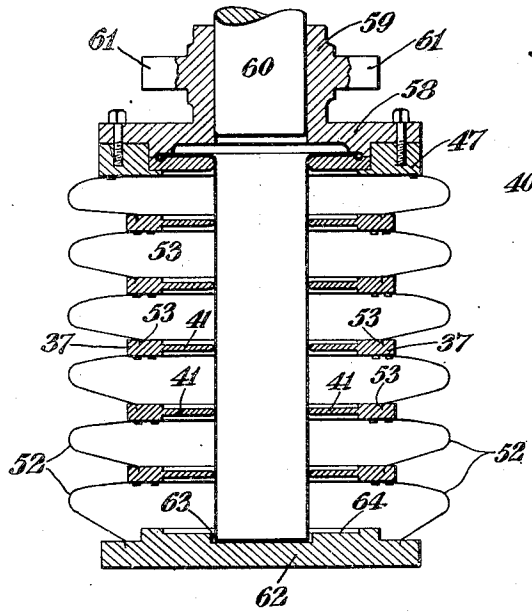

Fig. 12.

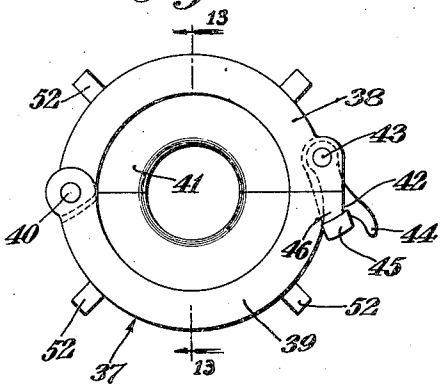

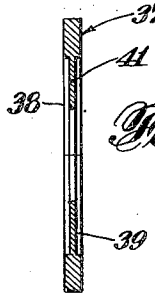

Fig. 13.

Fig. 14.

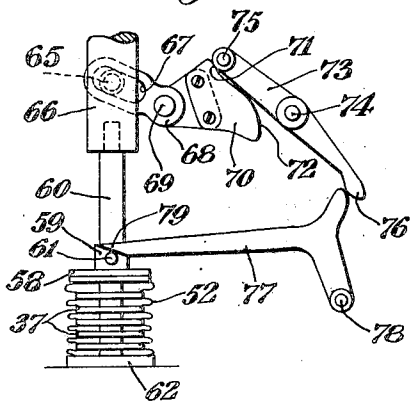

Fig. 15.

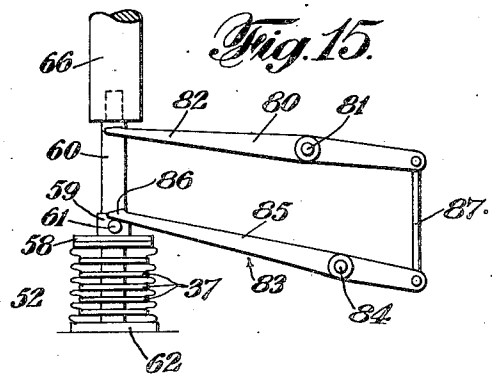

INVENTOR
Joseph G. C. Mantle
BY
Prindle Bean & Mann
ATTORNEY

Patented Aug. 4, 1936

2,050,230

UNITED STATES PATENT OFFICE

2,050,230

METHOD OF MAKING DIAPHRAGMS OR THE LIKE

Joseph G. C. Mantle, Leonia, N. J., assignor, by mesne assignments, to Bridgeport Thermostat Company, Inc., Bridgeport, Conn., a corporation of Delaware

Application September 17, 1930, Serial No. 482,468

5 Claims. (Cl. 153—73)

This invention relates to a method of making diaphragms or the like from shells or tubes of ductile material. The shells or tubes are usually drawn from sheet material and may be either flanged or plain.

One object of this invention is to rapidly and economically transform shells or tubes of ductile material into such shapes which, in general, could only heretofore be done by repeated annealings and operations or first forming portions and then joining them together to form a whole. By my invention a large number of shapes may be obtained in a single operation which the limited ductility of the material comprising the shell or tube would otherwise have rendered impossible.

Another object of this invention is to roll a series of inwardly directed creases or grooves in the tube or shell before subjecting the tube or shell to an hydraulic method.

Another object of this invention is the provision of a circumferentially corrugated tubular wall, the open end of the tubular wall being folded upon itself to form an outwardly projecting gasket flange.

In the drawings—

Figures 1 and 2 represent partial vertical cross sections of an apparatus adapted to perform the first stage of the operation for forming an outwardly projecting gasket flange on a tube or shell.

Figures 3 and 4 represent partial, vertical cross sectional views of an apparatus for performing the second stage of the operation for forming an outwardly projecting gasket flange on the shell or tube.

Figure 5 reprsents an apparatus for forming grooves or creasings in the wall of the flanged shell or tube, with a tube in position for grooving.

Figure 6 represents the shell or tube after it has been subjected to a grooving operation.

Figure 7 represents a vertical cross section of a contractible mold showing the grooved tube in position at the start of the operation.

Figure 8 represents a vertical cross section of a contractible mold showing a flanged tube after the preliminary bulging of the wall thereof by interior pressure.

Figures 9 and 10 represent plan views of the top holder and top mold part of the contractible mold shown in Figures 7 and 8.

Figure 11 represents a vertical cross section of a contractible mold with a flanged tube in position at the beginning of the collapsing operation, a different form of top plate being used in this embodiment.

Figure 12 represents a top plan view of a holder for the contractible mold, the holder comprising hinged, complementary sections.

Figure 13 is a vertical cross section taken on line 13—13 of Figure 12.

Figures 14 and 15 represent two forms of mechanisms which may be used to collapse the contractible mold while the shell or tube is under sustained pressure.

Referring to Figures 1 and 2, a stationary cylindrical receptacle 1 has an opening 2 in its top such that a tube or shell 3 may be positioned therein. Adjacent this opening, the receptacle is provided with a flat annular surface 5 which terminates in an annular depression 6 surrounded by an annular shoulder 7. The surface 5, depression 6, and shoulder 7 serve as a former or mold to form the outwardly projecting gasket flange 8 on the shell or tube, as shown in Figure 4. Received within the receptacle 1 is the plunger 9, having a reduced end 10 to which a washer 11 is suitably secured. The washer 11 is of a larger diameter than the end 10 of plunger 9. Surrounding and secured to the plunger 9 is a ring or cylinder 12 having an annular depression or groove 13 in its lower portion, the depression forming an annular recess for retaining the open end of the tube or shell in position. It should be noted that the open end of the shell extends into the recess for only a short distance.

Mounted on the reduced end 10 of the plunger 9, is a cylinder 14 formed with a head 15 which has a sliding fit within the opening 2 in the receptacle 1. The cylinder 14 is adapted to rest on the bottom of the shell or tube and is of such a height that its top surface 16 is in the same plane as or flush with the flat surface 5 of the receptacle 1. The head 15 on its inner lower end is provided with a shoulder 17 against which the washer 11 on reduced end 10 is adapted to abut. Between the top surface 16 of the head 15 and the bottom of plunger 9 is a cylinder 18 of compressible material, which may be made of rubber. When the plunger 9 is forced downwardly, cylinder 14 remains stationary but the rubber cylinder compresses and bulges outwardly, as shown in Figure 2, and the tube or shell wall is curved or bulged outwardly as at 19. Upon the withdrawal of the plunger 9 the compressible cylinder 18 regains its original shape, shown in Figure 1, and the shell or tube retains the bulged form shown in Figure 2. Upon withdrawal of

plunger 9 the cylinder 14 is also removed since washer 11 abuts shoulder 17 on the cylinder.

Referring now to Figures 3 and 4, which show an apparatus for continuing the operations performed in Figures 1 and 2, a plunger 20 is provided which has a diameter of substantially the same size as shoulder 7 of receptacle 1. At its bottom, the plunger 20 is provided with a reduced end 21 which has a diameter of substantially the same size as the opening 2 of receptacle 1. The plunger 20 is in alinement with the receptacle 1 and when moved downwardly is adapted to be received by shoulder 7 and end 21 is adapted to be received by the opening 2 in the receptacle 1. The plunger 20 with its reduced end 21 in conjunction with the opening 2, flat surface 5, depression 6 and shoulder 7 of receptacle 1, serves as a former to complete the operation of forming the outwardly projecting gasket flange. When the plunger 20 is forced downwardly, the curved portion of the wall 19 is doubled upon itself and the outer edge thereof is forced into the annular depression 6 to form the gasket flange provided with a hollow annular rim 22.

The flanged tube is now ready for the corrugating operation and may either be rolled to form preliminary grooves or creasings therein, or may be placed in a contractible mold and the preliminary creasings may be formed by an initially applied internal pressure while the tube is held in the contractible mold. Referring first to Figure 5, 25 represents a rotatable internal mandrel which is of a less diameter than that of the tube itself. The mandrel 25 is provided with a plurality of grooves or depressions 26 extending circumferentially therearound. Cooperating with the rotating mandrel 25 is forming roller 27 formed with a plurality of circumferential projections or formers 28 which correspond in position and number to the grooves 26 in the mandrel. The roller 27 is mounted on the axis 28' which is mounted in the arms of a yoke 29. The forming roller 27 is adapted to be pressed against the tube or shell 3 which is placed on the mandrel 25, and due to the rotation of the mandrel, the shell or tube 3 is provided with the creasings or grooves 30. The shell or tube 3 is held in position on the rotating mandrel by means of the roller 31 mounted on axis 32 of the holder 33 by pressing the closed end of the tube against the end of the mandrel. The creasing or grooving of the shell or tube 3 may be very quickly effected in an ordinary lathe, and at the end of this operation, the shell or tube appears as it is shown in Figure 6. This completes the rolling operation of the flanged tube.

The grooved or creased shell 1 is now placed in a contractible mold, as shown in Figure 7, which comprises a bottom mold part 35, a separable top mold part 36, and a plurality of intermediate hinged mold parts 37. The mold parts 37 comprise two complementary sections 38 and 39 hinged at 40, as shown in Figure 12. Each mold section is semi-circular and is provided with an inwardly extending thin central portion 41 which forms a circular opening when the sections are brought together, the opening being adapted to encircle a tube or shell. The section 38 is provided at one end with a lever 42 pivoted at 43 and provided with a handle 44. Adjacent the end of lever 42 there is a bevelled projection 45 which is adapted to co-operate with a bevelled shoulder or flange 46 formed on section 39. Projection 45 and shoulder 46 are positioned opposite hinge 40 and coact to hold the sections together unyieldingly so that the sections will not spread during the operation. It will be apparent that means for rapidly securing the mold parts 37 in position or removing them from position is provided.

The bottom mold part 35 is provided with a central depression or cutaway portion 45' upon which the closed end of the shell or tube 3 is adapted to rest. The flange of the shell or tube 3 is clamped between the top plate 46' and the top holder 47 for the mold part 36. These two parts 46' and 47 are securely held together by screws or other suitable means. The top mold part 36 comprises two separate complementary sections shown in Figure 9, the two sections being formed with spaced lugs 48 which are adapted to be inserted in notches 49 formed in groove 50 of top holder 47 shown in Figure 10 and when given a twist or turn are supported and held together therein. The top surface of the mold part 36 is flush with the top surface of the top holder 47, so as to form a continuous support for the flange of the shell or tube. The top holder 47 is provided with an annular depression 51 to receive the gasket flange on the flanged tube.

The top holder 47 and the intermediate mold parts 37 are held in spaced relation by the interposed, curved, leaf springs 52, one end of each spring being connected to the bottom portion of the mold parts and the other or free end of the spring being adapted to fit in the slot 53 provided in the upper surfaces of each of the mold parts 37 and the bottom mold part 35. These springs 52 are adapted to permit independent movement of each holder, and to sustain the holders in correct relation to each other, and also act as guides in preventing lateral movement of the holders. The top plate 46 is provided with an opening 54 communicating with a pipe or tube 55 which telescopes into reservoir 56 containing fluid under pressure. Between the reservoir 56 and the top plate 46 is a removable stop piece 57.

After the first stage of the operation is completed, the grooved or creased shell or tube 3 is placed in the contractible mold, as shown in Figure 7. The flange of the shell or tube is then clamped between the top mold part 36, top holder 47, and top plate 46'. The interior of the shell or tube 3 is then subjected to fluid pressure from the reservoir 56, and while the tube is under this pressure, the top plate 46' is forced downwardly to collapse the contractible mold and to form the corrugated tubular wall. The grooves or creasings 30 act to hold the mold parts in correct spaced relation, and the springs 52 also assist to keep the parts 37 correctly spaced.

The rolling operation increases the hardness of the metal in the grooves or creasings 30, and a temper is, therefore, induced in the corrugation nearest the axis. When the grooved or creased shell or tube 3 is placed in a contractible mold, subjected to internal pressure, and collapsed, the thickness of the material throughout the length of the corrugations is less than that of the original wall. There is, consequently, a stretching of the metal, but the wall of the finished product is substantially uniform. The portions of the shell or the tube substantially midway between the mold parts are stretched and work the most, and the shell or tube is hardest at these portions. By suitably adjusting the internal fluid pressure the inner and outer corrugations may be given any relative degrees of hardness which may be desired. It is, of course, desirable to obtain the

optimum hardness and temper in the outer corrugations so that an expansible and contracible tubular wall results which has a long life. The amount of stretch obtained during the operation of my invention is well within the safe working limit of the material and corrugated articles made according to my method have been used continuously without breakage or failure. The metal of which the shell or tube is formed is a ductile one, and the rolling operation and the expanding and collapsing operation, work the metal of the wall sufficiently to produce a highly flexible and durable, expansible and contractible wall.

Figure 11 shows a contractible mold having a slightly diffierent top plate which may be substituted for the top plate 46' shown in Figure 7. In this form, top plate 58 is provided with an elongated sleeve 59 which is adapted to slidably receive a plunger 60 of the power press shown in Figures 14 and 15. Top plate 58 is also provided with projections or lugs 61 which are forced downwardly by the collapsing means provided on the power presses shown in Figures 14 and 15.

In this modification, the bottom mold part 62 has a central depression 63 and a concentric shallower and larger depression 64 for receiving the fold of the completed article.

The mechanism for collapsing the contractible mold and for preliminarily bulging the shell or tube shown in Figure 8 will now be described. Referring first to Figure 14, a stud and roller 65 carried by the punch-holder 66 engages the slot 67 in an arm of the lever 68 fulcrumed at 69. A cam member 70 is attached by screws or other suitable means to the other arm of lever 68. The cam member 70 is provided with a curved surface having an arcuate portion 71 concentric with the fulcrum 69, and the cam surface 72 which forms a continuation of the arcuate portion 71. The cam surface 72 is so formed as to permit the levers to move a greater distance than the plunger 60 so as not to increase the pressure in the collapsed tube to too great an extent due to the decrease in volume thereof. The cam surface, therefore, gives a differential movement to the levers and to the plunger.

Lever 73, fulcrumed at 74, carries a roller 75 which is adapted to engage the curved surface of the cam member 70, and the end 76 of the lever 73 is adapted to engage an arm of the lever 77 which is fulcrumed at 78. Lever 77 has a forked end 79 adapted to press downwardly on the lugs or projections 61 of the sleeve 59 for the purpose of compressing the contractible mold. The punch-holder 66 is shown holding the plunger at the beginning of the operation, and during the first part of the downward movement the roller 75 is on the concentric part 71 of the cam member 70 and no movement is given to the lever 76. Upon further downward movement of the punch-holder, the movement of the levers commences and the forked end 79 resting on the projections or lugs 61 presses downwardly to collapse the contractible mold and to form the corrugated shell or tube. The roller 75 is then on the cam-shaped part 72 of the cam member 70 which is farthest from the fulcrum 69, but is it to be noted that the end 79 of the lever 77 has been moved downwardly a greater distance than the plunger 60 due to the shape of the cam surface 72 on cam member 70.

Referring now to Figure 15, a lever 80 is fulcrumed at 81 and has a free arm 82 which is spaced a distance from the punch-holder 66 at the beginning of the operation, so that a slight movement of punch-holder 66 and plunger 60 is possible before lever 80 is moved. Another lever 83 is fulcrumed at 84 and has a free arm 85 provided with a forked end 86 which presses downwardly on lugs 61 on top plate 58. The inner ends of the other arms of the levers 80 and 83 are connected by a link 87. It is to be noted that free arm 85 of lever 83 is longer than free arm 82 on lever 80, so that during the collapsing operation the forked end 86 of lever 83 travels a greater distance than the end of lever 80, and consequently, the contractible mold is moved downwardly at a faster rate than the plunger 60. A slight downward movement of the punch-holder 66 moves it into contact with the end of free arm 82, and brings the plunger 60 into such position as to form the bulgings 88, and the resultant creasings 89. Further movement of the punch-holder forces the end of free arm 82 downwardly and due to the interconnection of levers 80 and 83, the forked end 86 of lever 83 forces the lugs or projections 61 on top plate 58 downwardly to collapse the contractible mold and form the corrugated tube or shell. Due to the fact that free arm 85 of lever 83 is longer than free arm 82 of lever 80, the contractible mold is moved downwardly at a faster rate than the plunger 60 so that there is not too great a pressure in the collapsed tube due to the decrease in volume thereof.

From the foregoing description the operation of the invention will be apparent.

It is to be expressly understood, however, that the invention is not restricted to a method including all the steps set out in the description, since the invention also contemplates methods of making expansible and contractible walls starting with a flanged tube or a flanged grooved tube.

The shells or tubes which are to be operated on are not restricted to shells or tubes of a circular cross section. It is obvious that the contractible mold may have any desired transverse or longitudinal form. Furthermore, the corrugated tubes or shells formed by using my method are not restricted to symmetrical shapes nor to uniform or concentric enlargements of the shell or tube.

This application is filed as a continuation as to common subject matter of my pending application Serial No. 749,208, filed November 11, 1924, entitled Corrugated diaphragm and method of making the same, and a continuation as to common subject-matter of my pending application Serial No. 726,671, filed July 18, 1924, entitled Method of and apparatus for making hollow articles.

What I claim is:

1. A method of making expansible and contractible walls, which comprises, bulging one end of the wall of a shell or tube and folding it back on itself to form a gasket flange thereon, and then expanding the wall of the shell or tube by internal fluid pressure while externally supporting portions of the wall of the shell or tube, and externally applying pressure to collapse the shell or tube to form outwardly extending circumferential corrugations.

2. A method of making expansible and contractible walls, which comprises, flanging one end of a shell or tube, rolling a series of inwardly extending grooves in the wall of the shell or tube, mounting the rolled shell or tube in a contractible mold, and then collapsing the contractible mold to collapse the shell or tube while under sustained internal pressure.

3. A method of making expansible and con-

tractible walls, which comprises, bulging the wall of a shell or tube adjacent one end and folding it back on itself to form a gasket flange, rolling a plurality of circumferential grooves in the wall of the shell or tube, mounting said rolled tube in a contractible mold, collapsing the contractible mold while the shell or tube is under sustained internal pressure to form a corrugated article.

4. A method of making expansible and contractible walls, which comprises, bulging a portion of the wall of a shell or tube adjacent one end thereof, and folding it back on itself to form a gasket flange on the shell or tube, forming a series of bulges in the wall of the shell or tube and then collapsing the wall of the shell or tube while it is under sustained internal pressure.

5. A method of making expansible and contractible walls, which comprises, bulging one end of the wall of the shell or tube and folding it back on itself to form a gasket flange thereon, and then subjecting the shell or tube to an internal fluid pressure and an axial pressure while the shell or tube is in a contractible mold to collapse the shell or tube to form outwardly extending corrugations therein.

JOSEPH G. C. MANTLE.