March 9, 1937. J. T. AUSTIN 2,072,844

SWELL EXPRESSION ENGINE

Filed March 18, 1933 4 Sheets-Sheet 1

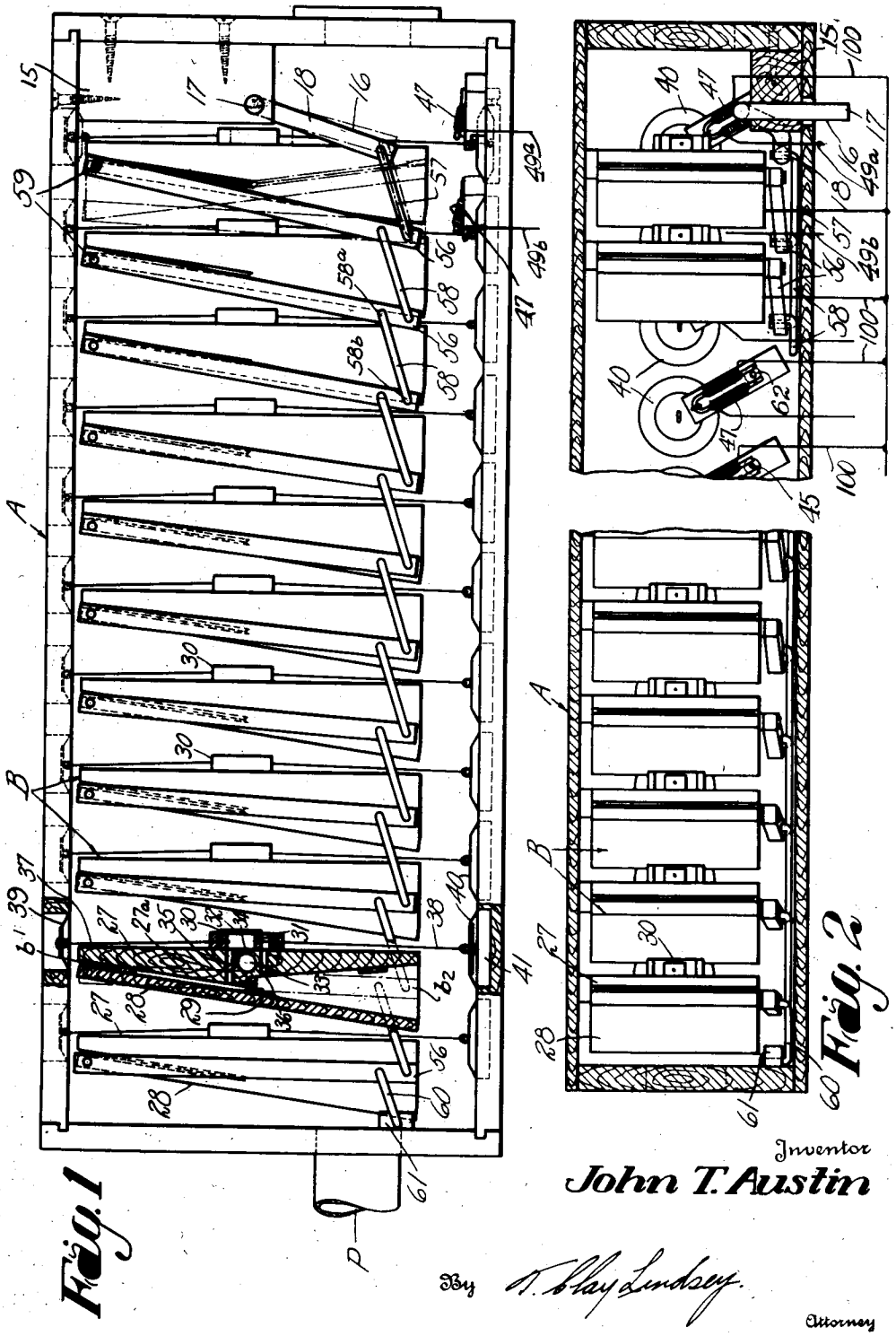

Fig. 1

Fig. 2

Inventor
John T. Austin

By T. Clay Lindsey
Attorney

March 9, 1937. J. T. AUSTIN 2,072,844

SWELL EXPRESSION ENGINE

Filed March 18, 1933 4 Sheets-Sheet 2

Fig. 3

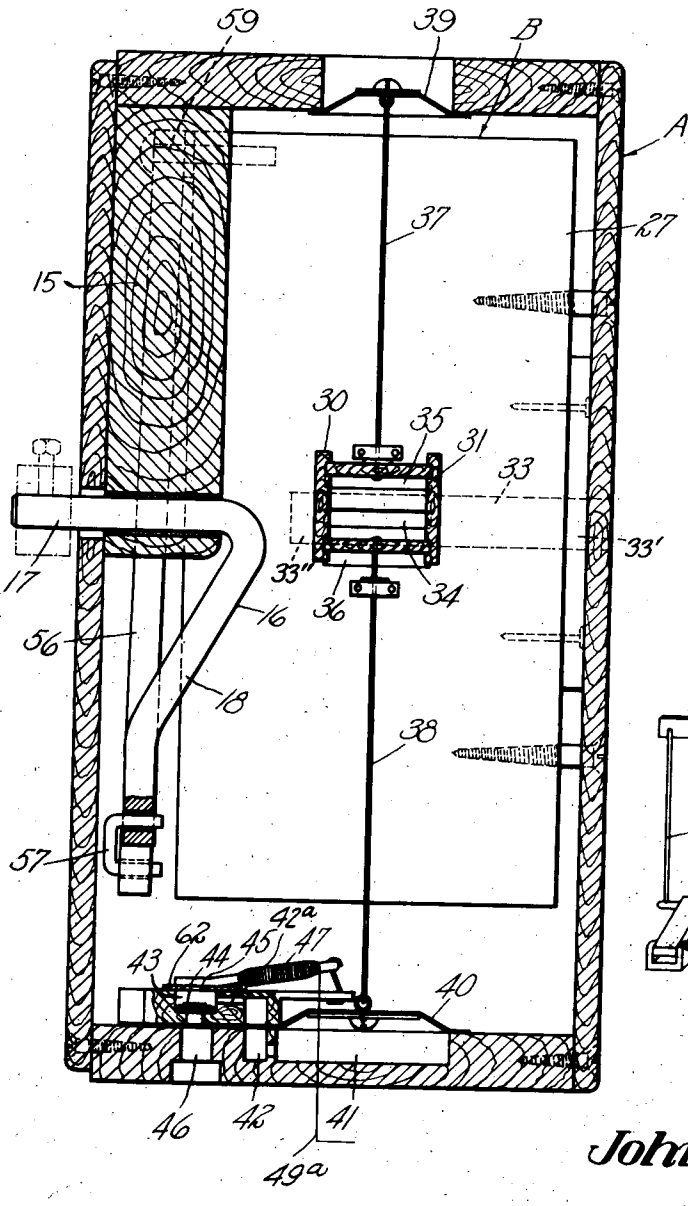

Fig. 4

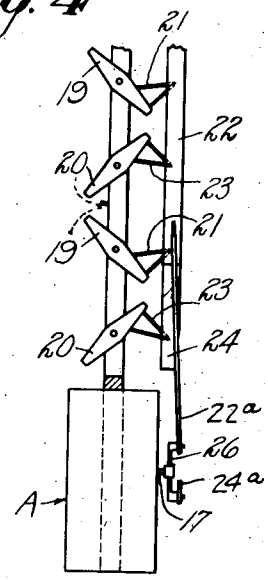

Fig. 5

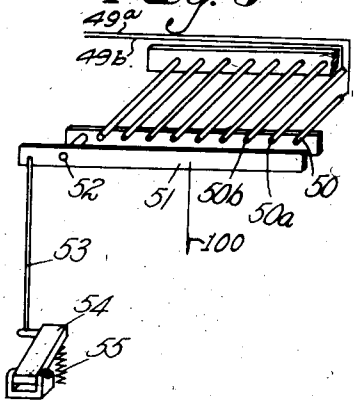

Inventor
John T. Austin

By J. Clay Lockey,
Attorney

March 9, 1937. J. T. AUSTIN 2,072,844

SWELL EXPRESSION ENGINE

Filed March 18, 1933 4 Sheets-Sheet 3

Fig. 6

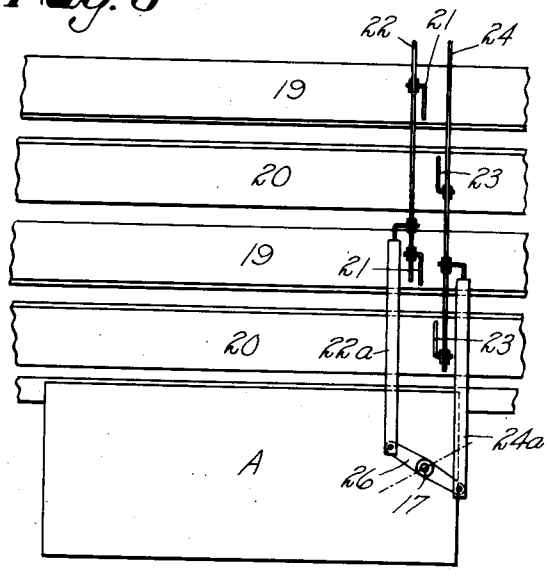

Fig. 7

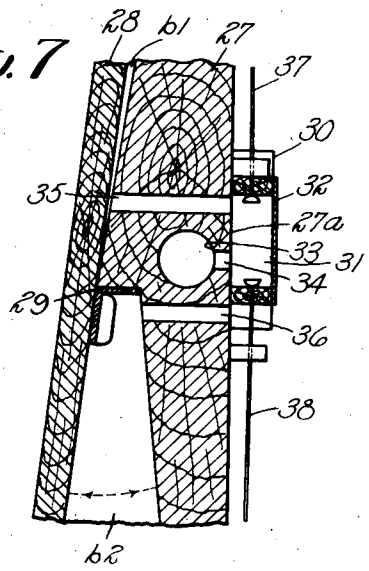

Fig. 8

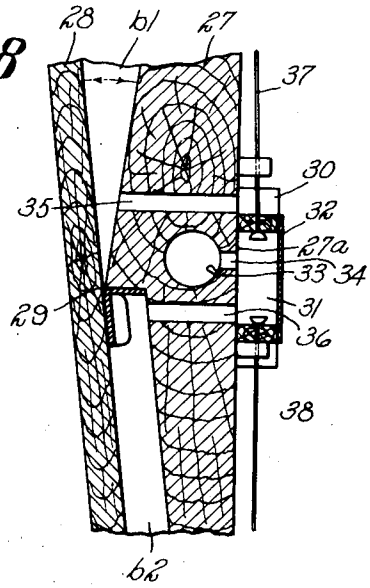

Inventor
John T. Austin

By R. Clay Lindsey
Attorney

March 9, 1937. J. T. AUSTIN 2,072,844

SWELL EXPRESSION ENGINE

Filed March 18, 1933 4 Sheets-Sheet 4

Fig. 9

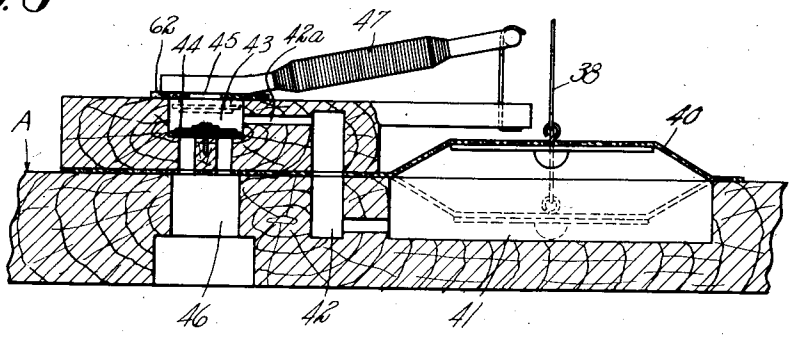

Fig. 10

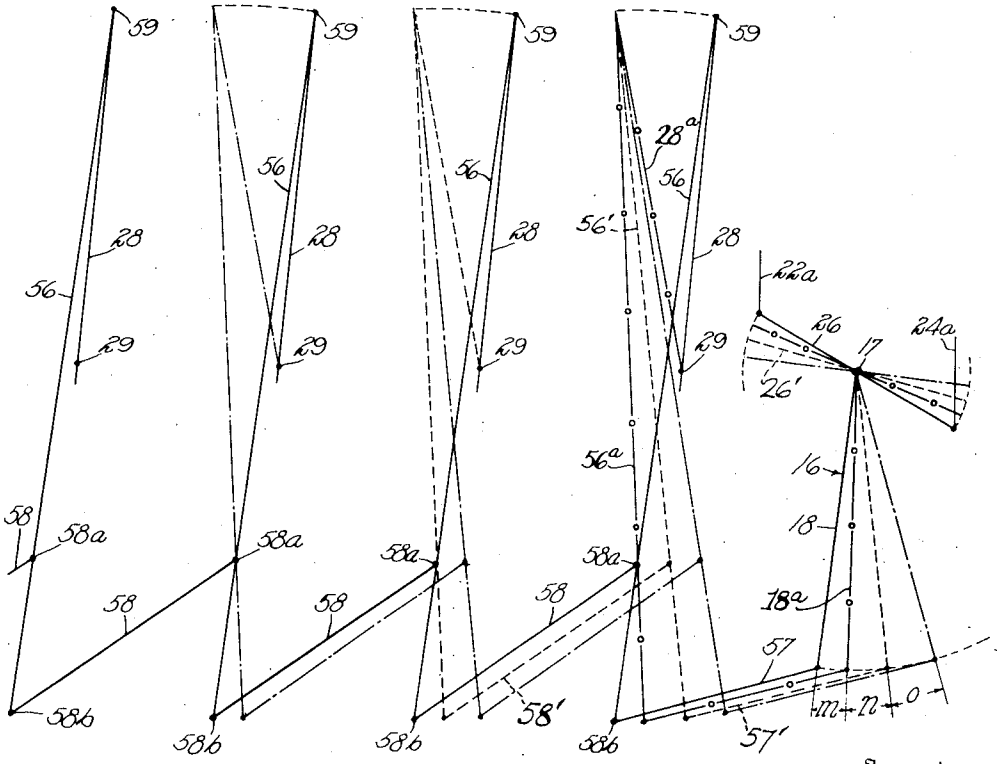

Inventor

John T. Austin

By K. Clay Lindsey

Attorney

Patented Mar. 9, 1937 2,072,844

UNITED STATES PATENT OFFICE

2,072,844

SWELL EXPRESSION ENGINE

John T. Austin, Hartford, Conn., assignor to The Austin Organ Company, Hartford, Conn., a corporation of Connecticut

Application March 18, 1933, Serial No. 661,474

8 Claims. (Cl. 121—48)

The present invention relates to musical instruments, and more particularly to swell expression engines for organs and the like of the type in which a series of pneumatics are employed for actuating the shutter operating mechanism.

An object of the invention is to provide an improved device of this character by means of which the shutters may be more nicely and accurately controlled so as to vary the sounds issuing from the swell box and thus obtain the desired expressions.

In accordance with the present invention, my improved arrangement is such that the shutters, on their opening movement, are given an accelerated movement (that is, a motion of increasing velocity) and the shutters, while being closed, are given a motion of decreasing velocity.

Another object of the present invention is to provide an improved arrangement which possesses great flexibility and in which any desired number, either even or odd, of pneumatics may be employed.

A further object of the present invention is to provide an improved device of this kind which comprises relatively few parts, is of simple construction, may be easily set up, is relatively cheap to manufacture, and is reliable and efficient in operation.

Other objects will be in part obvious, and in part pointed out more in detail hereinafter.

The invention accordingly consists in the features of construction, combination of elements and arrangement of parts which will be exemplified in the construction hereinafter set forth and the scope of the application of which will be indicated in the appended claims.

In the accompanying drawings, wherein is shown, for illustrative purposes, one embodiment which the present invention may take.

Fig. 1 is a side view of my improved swell expression engine, partly in elevation and partly in section, and with one side of the swell box or casing removed;

Fig. 2 is a top plan view of my improved swell expression engine with parts broken away and parts in section;

Fig. 3 is a transverse vertical section of the same;

Fig. 4 is a diagrammatic organization of the shutters and the operating mechanism therefor in end elevation;

Fig. 5 is a diagrammatic view of the electrical connections for the electromagnets;

Fig. 6 is an elevational view of the shutters and shutter controls shown in Fig. 4 looking from the right-hand side of Fig. 4;

Fig. 7 is a sectional view on an enlarged scale of one of the pneumatic controlling valves;

Fig. 8 is a sectional view similar to Fig. 7 showing the valve at the opposite limit of travel from that illustrated in Fig. 7;

Fig. 9 is an enlarged sectional view of the electromagnet controlled valve and diaphragm illustrated in section in Fig. 3; and

Fig. 10 is a diagrammatic view showing the operation of the pneumatics as they function consecutively to operate the shutter control mechanism.

Referring to the drawings in detail, A denotes generally a casing or engine box of my improved engine, and B designates a plurality of pneumatics disposed within the engine box. The casing or engine box A may be made of wood, or any other suitable material, and may be of any desired shape or size. It may be supplied with air under pressure by means of a pipe P connected to a suitable pressure source, not illustrated. A crankshaft generally indicated at **16** is journalled adjacent one end of the casing as by means of a bearing block **15** and has a shaft portion **17** extending beyond the casing. It also has a crank arm **18** within the casing and is operatively connected to the shutters **19** and **20** by means of an arm **26** mounted without the casing on the shaft portion **17**. These shutters may be mounted and operated in various ways but, by way of illustration, I have shown them as being so associated as to operate in a manner disclosed in my copending application Serial Number 637,065, filed October 10, 1932, now abandoned. More specifically, the shutters are so associated with one another that adjacent shutters rotate in opposite directions so that, when closing, the adjacent edges of adjacent shutters move in tangential arcs in the same direction towards the plane of the opening of the swell box as particularly illustrated in Fig. 6.

Referring to Figures 4 and 6, alternate shutters are designated by the numeral **19**, and intervening ones by the numeral **20**. The shutters **19** are connected by arms **21** to a bar **22**, and the shutters **20** are connected by arms **23** to a bar **24** positioned alongside of and parallel with the bar **22**. The bars **22** and **24** are respectively connected at their lower ends by links **22*a*** and **24*a*** to a cross lever **26** secured to the projecting portion **17** of the crank **16**.

For the purpose of operating the crank **16** to effect movement of the shutters, there are

mounted within the engine box a plurality of pneumatics B which preferably are of like construction. The pneumatics illustrated are of double acting type although single acting pneumatics are within the scope of the invention. Each pneumatic has a fixed bottom or arm 27 and a swinging top or arm 28. The swinging arm is pivoted to the fixed arm between its ends, as at 29, thus providing a top bellows b1 and a lower bellows b2.

Admission of air to and from the bellows of each pneumatic is controlled by a valve 30 having a frame 31 and a flexible or leather outer wall 32 as particularly illustrated in Fig. 7. The side of the valve which faces the fixed arm is open. This arm has a transverse opening 33 communicating at its outer end 33′ with the atmosphere and communicating at its other or inner end 33″ with the interior of the valve by a port 34 as illustrated in Fig. 1 and Fig. 3. Above the port 34 is an opening 35 leading to the upper bellows, and below the port 34 is an opening 36 leading to the lower bellows. The valve is so proportioned that in its upper position the upper bellows may exhaust to the atmosphere through the opening 35, valve 30, port 34, and transverse opening 33. When the valve is in this position, the lower bellows communicates with the interior of the engine box through the opening 36. When the valve is in its lowermost position, the lower bellows communicates with the atmosphere and the upper bellows communicates with the interior of the engine box. The pressure of the air above that of the atmosphere which is in the engine box normally urges the valve 30 against the seat 27a provided by the fixed arm 27 of the pneumatic. The valve 30 is connected by wires 37 and 38 to diaphragms 39 and 40, respectively, located in the upper and lower walls of the engine box. The upper diaphragm 39 is acted upon from above by the atmosphere and from below by the pressure within the engine box. As illustrated in Figs. 3 and 9, the lower diaphragm 40 constitutes a cover for a chamber 41 which communicates, by means of passages 42 and 42a, with the valve chamber 43 within which an electro-magnet actuated valve 44 is located. The valve chamber is adapted to communicate with the interior of the box through an overhead opening 45 and with the atmosphere through a downwardly extending opening 46. When the valve is in its lower normal position shown in Fig. 3, the chamber 41 communicates with the interior of the engine box and, since the pressures on opposite sides of the diaphragm 40 are equal and the pressure on the under side of the upper diaphragm 39 is greater than the atmospheric pressure on the upper side of that diaphragm, the air valve 30 is moved to raised position illustrated in Fig. 7 and in which position the upper bellows is collapsed. When the valve 44 is raised as illustrated in dotted lines in Fig. 9, which takes place when the electro-magnet 47 is energized, the chamber 41 communicates with the atmosphere through passages 42, 42a, and 46 and then the pressure on top of the diaphragm 40 being greater than the pressure under that diaphragm and the diaphragm 40 being of greater area than the diaphragm 39, the air valve 30 will be lowered as illustrated in Fig. 8 so that the lower bellows will be exhausted, thus bringing the movable arm of the pneumatic to a position opposite that shown in Fig. 1 as shown in dotted lines of Fig. 9.

It is, of course, understood that each pneumatic has an associated air valve 30 as illustrated in Fig. 1 and each air valve is associated with its own electromagnet 47. These electromagnets are adapted to be energized successively or seriatim in one direction to effect opening movement of the shutters, and are deenergized in the opposite direction when it is desired to close the shutters. Any suitable control means for the electromagnets may be adopted and, therefore, I have shown in Fig. 5, more or less diagrammatically, means of a type which is old in the art. This control means includes a plurality of wires 50, 50a, 50b, et cetera, the first wire being connected to one side of the right-hand electromagnet 47, wire 50a to the corresponding side of the next one, wire 50b to the next one, and so on by wires 49a, 49b, et cetera. Extending transversely below the wires is a contactor 51 pivoted, as at 52, to which is connected one end of a line 100, the other end of which is connected to the side of the electromagnet 47, et cetera, opposite the sides to which the wires 49a, 49b, et cetera, are connected. A suitable source of power may be included in the line 100. The projecting end of the contactor is connected by a link or wire 53 to a pedal 54 beneath which is a spring 55. Upon imparting a downward movement to the pedal, the right-hand end of the contactor will rise and successively pick up or contact with the flexible wires 50a, 50b, and the following wires in consecutive relation, whereupon the first right-hand pneumatic, then the next, then the next, and so on, will be operated to effect an opening movement of the shutters. Upon an upward movement of the pedal, the contactor will be lowered so that contact with the wires wil be successively broken in the opposite direction; that is to say, the contactor will be separated from the wire 50a before it is separated from the wire 50. As the connections are broken, the shutters are given a closing movement.

Referring now to my improved operative connections between the pneumatics and the crank 16 and which connections form the subject matter of the preset invention, it will be observed that the movable arm of each pneumatic has pivoted to it, adjacent its upper end, as at 59, an arm 56. The first right-hand arm is connected by a link 57 to the crank arm 16. Each successive arm is connected to the preceding one by a link 58, and these links are so arranged as to give a compounded movement to the crank arm 16 as the pneumatics are operated in succession. More particularly, the rear end 58b of each link is connected to an arm further from the pivot of that arm than is the forward end 58a of the next succeeding link so that each arm, in effect, constitutes a lever which is pivoted on the forward end of that link which connects that arm to the next succeeding arm. The last or left-hand arm 56 is connected to a fixed block 61 by a link 60 which is pivoted to the block.

In the operation of the device illustrated diagrammatically in Fig. 10, assuming that the shutters are in closed position and it is desired to open the same, the pedal 54 is depressed, thereby raising the right-hand end of the contactor 51 into engagement with the wire 50. The electro-magnet 47 associated with the first or right-hand end pneumatic B will thus be energized, and its valve 44 will be moved so that communication is established between the chamber 41 and the atmosphere. The valve will engage the insulating part 62 so that there is no communication between the chamber 41 and the interior of the engine box. The diaphragm 40 will collapse,

thereby bringing the valve **30** to its lowered position and in which position the lower bellows communicates with the atmosphere through the valve and the transverse opening **33**. The port or opening **35** of the upper bellows is placed in communication with the interior of the engine box, which means that the movable arm of the first pneumatic will swing counterclockwise to the dash-circle line position **28***a* shown in Fig. 10. When this arm so moves, it pulls the upper end of the first arm **56** to the left to position **56***a* and, during such movement of the arm, it is pivoted or fulcrumed on the forward end **58***a* of the first link **58**. Thus the lower end of the arm is swung to the right, moving the link **57** and crank arm **18** to the right and resulting in initial opening movement of the shutters as shown by the dash-circle line **18***a*. During such movement of the first arm, it acts as a lever of the first class. Upon further depression of the pedal **54**, the contactor will engage the next wire **50***a*, thereby energizing the electro-magnet associated with the second pneumatic. This will effect the collapse and expansion of the lower and upper bellows respectively of the second pneumatic, resulting in the cross lever **26**, link **57**, the first arm **56**, the first link **58**, and the second arm **56** taking positions indicated by the respective dash lines **26'**, **57'**, **58'**, and **56'** in Fig. 10. More particularly, the arm associated with the second pneumatic, will move counterclockwise about its pivotal connection with the next succeeding link as a fulcrum. This movement of the second arm will, through the first link **58**, cause the first arm to swing to the right about its pivot **59** and, of course, the crank arm will be moved further to the right to further open the shutters. However, in this instance, the angular movement imparted to the crank arm will be greater than the angular movement imparted to the crank arm when the first pneumatic is operated because the movement of the second arm is compounded through the links **58** and **57** and the first arm **56**; that is to say, when the second arm **56** is operated, it acts as a lever of the first class and causes the first arm to act as a lever of the third class, it being clear that when the first arm **56** is swung about the pivot **59**, the rear end **58***b* of the link **57** will be moved a slightly greater distance than will the forward end **58***a* of the first link **58**.

Upon further depression of the pedal, the third pneumatic will be operated, and the first three arms **56**, the first two links **58**, link **57**, member **18** and cross lever **26** will take the positions indicated by the dot-dash line in Fig. 10. More particularly, in this case the third arm will act as a lever of the first class, and the first and second arms will act as levers of the third class, so that the crank arm will be moved through a distance which is greater in extent than either of the first two movements imparted to it. Each succeeding arm is actuated in the same manner, and the movement of each is accumulated through the preceding linkages so that successively greater angular movements are imparted to the crank. From Fig. 10, it will be seen that, when the first pneumatic is operated, the crank arm **18** is moved through an angular distance indicated by the letter *m*; on operation of the second pneumatic the crank arm is moved through a distance *n*; on operation of the third pneumatic, the crank arm is moved through a distance *o* and that the distances *m*, *n*, and *o* are of progressively greater extents.

When it is desired to close the shutters, the electromagnets are de-energized in the reverse order to that in which they were energized to open the shutters. As each electromagnet is de-energized, the valve **44** associated therewith is permitted to fall by the force of gravity to a position in which the chamber **41** is placed in communication with the interior of the engine box. The pressure on each side of the lower diaphragm **40** is thus equalized, and since the outer face of the upper diaphragm **39** is exposed to the atmosphere and its inner face to the air under pressure within the engine box, the diaphragm **39** will be forced upwardly so as to move the valve **30** to its original position, shown in Fig. 1, so that the lower bellows is expanded and the upper bellows is collapsed, whereupon the movable leaf of the pneumatic will swing clockwise to the full line position shown in Fig. 1. The arm associated with the pneumatic which has thus been operated will swing about its pivotal connection with the forward end **58***a* of a link **58**, and each of the preceding arms will swing about their respective pivotal connections **59**; that is, about the point where they are connected with their respective pneumatics. Assuming, for example, that only the first three pneumatics have been operated to partially open the shutters (in which event the parts have the dash-dot line position shown in Fig. 10) then to close the shutters the third pneumatic, the second pneumatic, and then the first pneumatic, is operated in that order. When the third pneumatic is operated, its arm acts as a lever of the first class, and the first and second arms act as levers of the third class, so that the distance (namely, distance *o*) that the crank is moved is the combined effect of the three leverage actions of all three of the arms. When the second pneumatic is operated, it acts as a lever of the first class, and the first arm acts as a lever of the third class, and the crank arm will be moved a step (i. e., distance *n*) which is of lesser extent than when the third pneumatic was operated. Thus it will be seen that the closing movement of the shutters is gradually retarded, that is, the velocity of movement is gradually decreased.

It is, of course, understood that, by very slowly depressing the pedal, first one pneumatic may complete its action, then the next one can complete its action, and so on, in which event the shutters are opened in a series of distinct steps, each step being greater than the preceding one, but, obviously, if the pedal is quickly depressed, a number of the pneumatics may be caused to operate at the same time, each pneumatic, however, becoming effective shortly after the preceding one has started its movement. Thus, a gradual increase in the volume of sound issuing from the box may be had, or a sharply increasing sound may be had. Thus, different degrees of volume and sound may be had and changes in the volume and sound may be brought about at various rates of speeds.

As many changes could be made in the above construction and many apparently widely different embodiments of this invention could be made without departing from the scope thereof, it is intended that all matter contained in the above description or shown in the accompanying drawing shall be interpreted as illustrative and not in a limiting sense.

It is also to be understood that the language used in the following claims is intended to cover all of the generic and specific features of the invention herein described and all statements of

the scope of the invention which, as a matter of language, might be said to fall therebetween.

I claim as my invention:

1. A swell expression engine for controlling the movements of shutters comprising a series of pneumatically actuated devices, more than two in number, an operative connection between the first of said devices and the shutters whereby, when said first pneumatic device is actuated, a predetermined movement is imparted to the shutters, and linkage interconnecting successive pneumatic devices, said last mentioned connections being so formed and arranged that upon actuation of each succeeding pneumatic device an accumulative movement of different extent than upon actuation of a preceding pneumatic device is imparted to the shutters.

2. A swell expression engine for controlling the movements of a plurality of shutters comprising a series of adjacently located collapsible pneumatics, each of said pneumatics including a pair of bellows having a movable interconnecting end member, an operative connection between the end member of the first pneumatic and the shutters, so connected that when the first pneumatic is collapsed, a predetermined initial opening movement is imparted to the shutters, an operative connection between the end member of each pneumatic and the corresponding member of the next adjacent pneumatic, said last mentioned connections being so formed and arranged that upon the collapse of each succeeding pneumatic a progressively accumulative shutter movement is produced wherein each successive individual opening movement of the shutter, as caused by one of the pneumatics, is of greater extent than the preceding movement, and means for independently and successively causing the collapse of said pneumatics.

3. A swell expression engine for controlling the movements of shutters comprising a series of pneumatically actuated devices, each of said devices including an air actuated bellows having a pivotal end plate movable in response thereto, an operative connection between the first of said devices and the shutters, connecting linkage between each of the correspondingly movable plates of adjacent devices, said linkages being so devised that upon collapse of the last device of said series, a predetermined gradually decreasing closing movement will be imparted to the shutters, and upon the collapse of each succeeding device, a further but additional closing movement of less extent than the preceding movement will be imparted to the shutters.

4. A swell expression engine for simultaneously controlling the movements of a plurality of cooperative shutters comprising a series of pneumatics, each of said pneumatics including a pair of oppositely disposed bellows having a common end member pivotally supported therebetween and arranged to angularly move with the alternate opening and closing of said bellows, manually operable means to individually and successively operate each of said pneumatics, an operative connection between the end members of the first of said pneumatics and the shutters whereby the pivotal movement of said end member will cause a predetermined initial movement to be imparted to the shutters, and operative connections including pivotally mounted links interconnecting each pair of movable members of said pneumatics in such manner that upon each successive operation of the pneumatics in one direction, a series of accumulative opening movements will be transmitted to the shutters, each succeeding movement as individually transmitted by one of said pneumatics being of greater magnitude than the preceding individual movement, and upon successive operation of the pneumatics in opposite direction, the shutters are closed in a series of accumulative movements, each of which is less than the preceding movement.

5. A swell expression engine for controlling the movements of shutters and comprising a series of pneumatically actuated devices, an operative connection between the first of said devices and the shutters, manually operable means to successively operate said devices, an arm pivotally secured to each pneumatic device and arranged for movement thereby in such manner that its pivoted end is moved whenever the pneumatic is actuated, linkage interconnecting adjacent and correspondingly located arms, said linkage being so connected that each arm as it is actuated serves to modify the extent of movement of the shutters for a predetermined but accumulative extent, and means including a fixed abutment pivotally linked to the last arm at the end of the series.

6. A swell expression engine for controlling the movements of shutters comprising a series of adjacently located pneumatics each having a movable member, an arm pivoted to the movable member of each pneumatic, a link mechanism pivotally secured at one end to the first arm and to the shutters at its other end, a link between each arm and the next succeeding one, each link being connected at its opposite ends to adjacent arms at different distances from the pivotal connections between the arms and the pneumatics manually controllable electrically actuated mechanism arranged to successively regulate the movement of each of the pneumatics and means associated with the last arm of the series and constituting an abutment.

7. A swell expression engine for controlling the movements of shutters comprising a series of pneumatics, each pneumatic being composed of a bellows having a fixed end and a movable end, an arm pivoted to the movable end of each pneumatic, means connecting the arm of the first pneumatic to the shutters, a link between each pair of adjacent arms, means to successively and individually operate each of the pneumatics, said links being pivotally connected at opposite ends to the lower ends of adjacent arms but at different distances therefrom, the arm associated with the pneumatic being operated constituting a lever of the first class, and the arm between that arm and the shutter connections each serving as levers of the third class, and means associated with the last arm of the series including an abutment connected thereto by means of a pivotal link.

8. A swell expression engine for controlling the movements of shutters comprising a series of pneumatic devices each of which includes a pair of bellows having a common fixed end plate and a common movable end plate pivotally supported intermediate of its ends for a swinging movement to simultaneously collapse one bellows and open the other, linkage connecting the movable plate of the first of said devices to the shutters, an arm pivoted to the end of the movable plate in each device, and a link having its opposite ends respectively pivoted to two adjacent arms, the

respective pivotal connections of each link with its adjacent arms being so disposed with respect to the pivotal supports of said arms that upon operation of each succeeding pneumatic device successive movements of different extents will be imparted to the shutters, and means associated with the last arm of the series including a link pivotally connected thereto at one end and pivotally secured to an abutment at the other end.

JOHN T. AUSTIN.