Jan. 24, 1939. W. VAN B. ROBERTS 2,144,935

AUTOMATIC VOLUME CONTROL CIRCUITS

Filed Sept. 28, 1935 3 Sheets-Sheet 1

Fig. 1

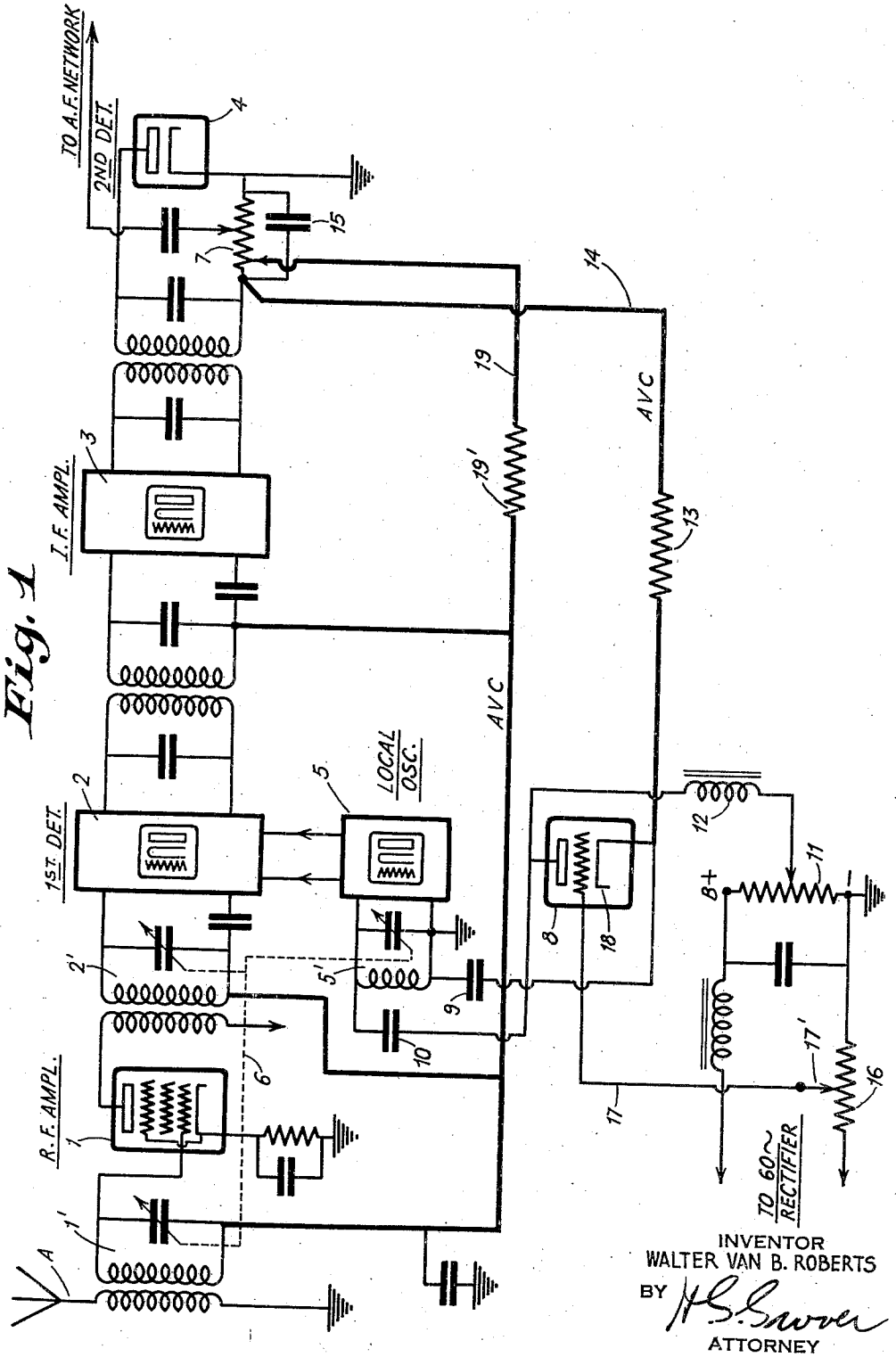

INVENTOR
WALTER VAN B. ROBERTS
BY H. S. Swope
ATTORNEY

Jan. 24, 1939. W. VAN B. ROBERTS 2,144,935

AUTOMATIC VOLUME CONTROL CIRCUITS

Filed Sept. 28, 1935 3 Sheets-Sheet 2

Fig. 2

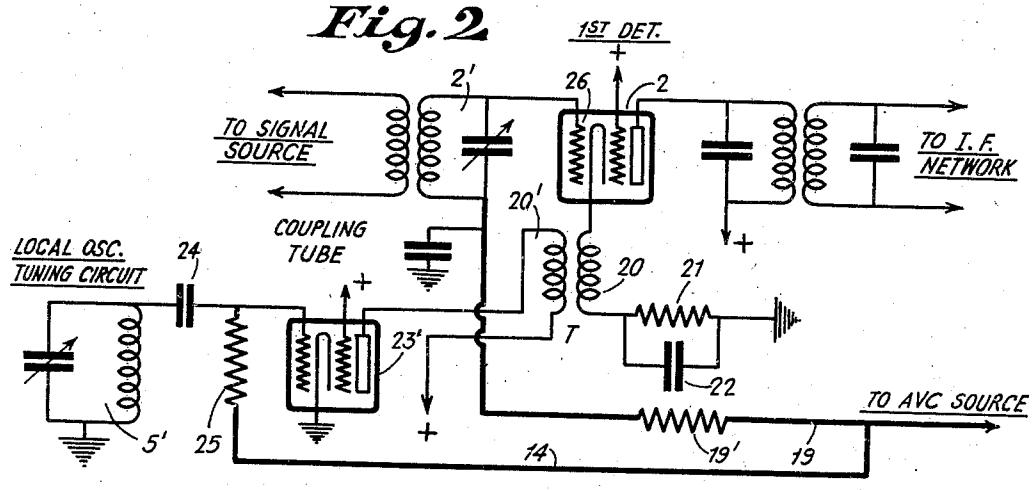

Fig. 3

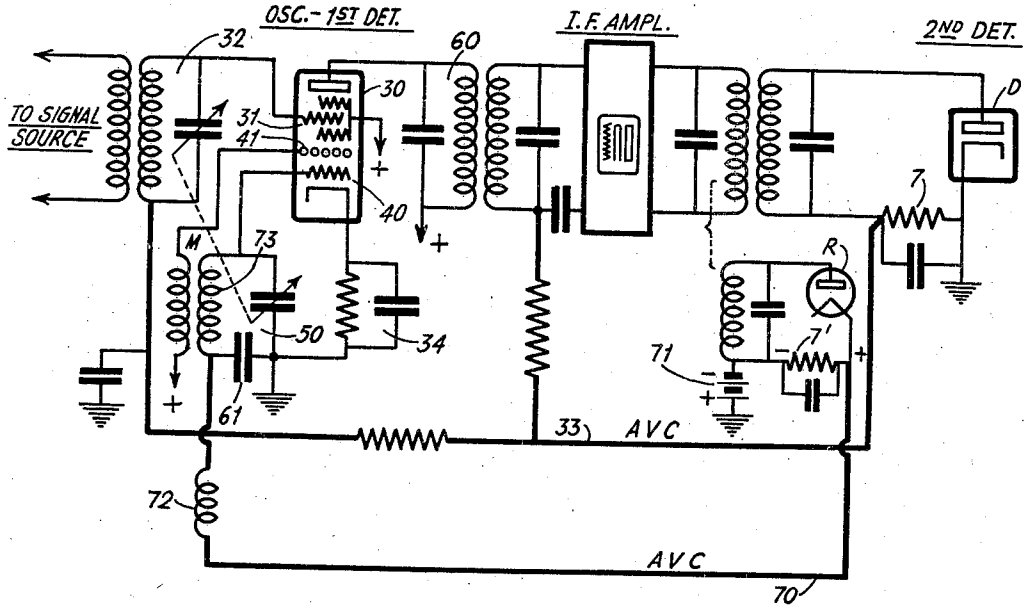

INVENTOR
WALTER VAN B. ROBERTS
BY H. S. Grover
ATTORNEY

Jan. 24, 1939. W. VAN B. ROBERTS 2,144,935

AUTOMATIC VOLUME CONTROL CIRCUITS

Filed Sept. 28, 1935 3 Sheets-Sheet 3

Fig. 4

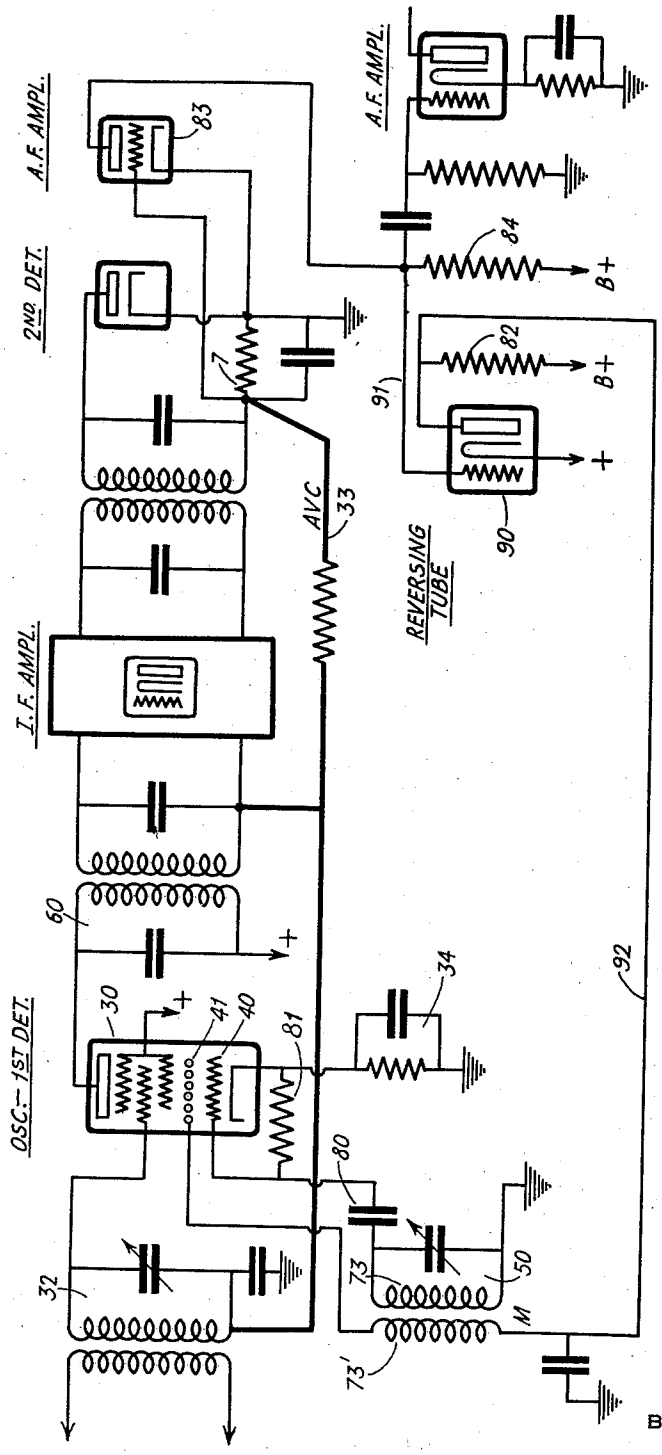

INVENTOR
WALTER VAN B. ROBERTS
BY W. S. Grover
ATTORNEY

Patented Jan. 24, 1939 2,144,935

UNITED STATES PATENT OFFICE

2,144,935

AUTOMATIC VOLUME CONTROL CIRCUITS

Walter van B. Roberts, Princeton, N. J., assignor to Radio Corporation of America, a corporation of Delaware

Application September 28, 1935, Serial No. 42,581

6 Claims. (Cl. 250—20)

My present invention relates to automatic gain control circuits, and more particularly to novel and improved circuit arrangements for automatically regulating the signal amplitude level at the output circuit of the frequency changer device of a superheterodyne receiver.

An important object of my present invention is to provide an automatically operating arrangement for regulating the oscillatory output of the local oscillator of a superheterodyne receiver without varying the mutual conductance of the oscillator tube itself.

Another object of the invention is to provide automatic volume control devices for superheterodyne receivers wherein the impression of local oscillations upon the first detector is varied in dependence upon received carrier amplitude changes; the operating efficiency of the first detector being also controlled, if desired, in accordance with said amplitude changes.

Other objects of the invention are to improve generally automatic volume control circuits for superheterodyne receivers, and more especially to provide circuits of this type which are not only efficient in operation but readily and economically manufactured.

The novel features which I believe to be characteristic of my invention are set forth in particularity in the appended claims; the invention itself, however, as to both its organization and method of operation will best be understood by reference to the following description taken in connection with the drawing in which I have indicated diagrammatically several circuit organizations whereby my invention may be carried into effect.

In the drawings:

Fig. 1 shows a circuit diagram of a superheterodyne receiver embodying one form of the invention,

Fig. 2 illustrates a modification of the invention,

Fig. 3 shows a further modification,

Fig. 4 is a circuit diagram of a modification of the arrangement in Fig. 3.

Referring now to the accompanying figures, wherein like reference characters designate similar circuit elements, there is illustrated in Fig. 1, in conventional manner, a superheterodyne receiver which comprises the usual signal collector A; radio frequency amplifier 1; first detector 2; intermediate frequency amplifier 3; second detector 4; local oscillator 5. 1, 2 and 5 are each provided with its respective tunable circuit 1', 2' and 5'. The variable tuning condensers of these tunable circuits are shown as having the adjustable elements thereof mechanically coupled for uni-control; and this is depicted by the dotted lines. The oscillator 5 may be of any well known and conventional type, and only the tunable circuit 5' thereof need be shown. The oscillatory output of network 5 is impressed on the mixer network 2 in any desired manner.

The collected signals, amplified in network 1, are impressed on the detector stage 2; it will be understood that the signals may be in the broadcast range (550 to 1500 k. c.), or in any of the short wave ranges when a multi-range receiver is used. The circuit 5' is, of course, adjusted through a frequency range which differs constantly from the signal frequency range by the value of the operating intermediate frequency. The energy of the latter frequency is amplified in stage 3, the amplified I. F. energy being demodulated in tube 4. This demodulator, or second detector, is shown as of the diode type; but those skilled in the art will appreciate the fact that other types of demodulators may be used. The audio component developed across resistor 7 is impressed upon a subsequent audio amplifier, and a final reproducer is used to reproduce the amplified audio energy.

The effect of variation of the signal carrier amplitude at collector A is overcome by the AVC networks to be described. A tube 8 is employed for variably damping the tunable oscillation circuit 5', and the plate to cathode impedance of tube 8 is connected across the latter circuit. The cathode of tube 8 is connected through condenser 9 to the grounded side of circuit 5', the plate being connected to the high alternating potential side of the latter through condenser 10. Operating direct current voltages are secured for tube 8 by tapping the power supply network. The latter is schematically represented at the bottom of Fig. 1, the numeral 11 representing the bleeder resistor which provides the various potentials for the receiver tubes.

The plate of tube 8 is connected through choke 12 to a point on bleeder 11 which is positive with respect to ground; the cathode of the tube is connected to ground through a path including filter resistor 13, lead 14 and resistor 7. The latter resistor is by-passed for intermediate frequency energy by condenser 15. Tube 8 is always biased beyond cut-off by connecting the grid of tube 8 to a suitable point on resistor 16, the latter being disposed in the negative side of the supply network. The grid lead 17 terminates in an ad-

justable tap 17' so that the action of tube 8 may be adjusted.

The voltage difference normally maintaining tube 8 biased beyond cut-off is decreased with signal increase by the connection of the cathode 18 to the anode, or negative, side of resistor 7. That is, the amount of biasing of tube 8 beyond cut-off is decreased as the AVC voltage increases. The intensity of the local oscillations produced in network 5 is limited to an amplitude equal to the amount of bias in excess of cut-off by the damping effect of tube 8 on stronger oscillations. In other words tube 8 does not act to damp the oscillation circuit 5' until the incoming signal amplitude has attained that amplitude which will result in increasing the potential of cathode 18 in a negative sense sufficient to remove the cut-off bias. At that signal amplitude the tube 8 becomes conductive, and begins to damp the circuit 5' due to the connection of the internal impedance of tube 8 across the circuit 5'. As the signal amplitude further increases, the damping effect of tube 8 rises; the local oscillation strength decreases still further. Because of this action the signal intensity at the output of mixer 2 will depend upon the intensity of the locally produced oscillations, as well as upon the signal amplitude at collector A.

This AVC action can be combined with a control of the gain of each of tubes 1, 2 and 3. Thus, the lead 19 (designated by the symbol AVC) is connected in such case from the signal grid circuits of tubes 1, 2, 3 to a point on resistor 7 which is at a suitable negative potential with respect to ground when signals are received. A filter resistor 19' is included in the AVC lead 19; the specific connections to the gain control electrodes of tubes 1, 2, 3 being omitted since those skilled in the art art fully acquainted with the constructions.

Of course, the control, or AVC, voltage for tube 8 and/or tubes 1, 2, 3 can be provided by a signal rectifier independent of the detector 4. Also, a common multi-grid tube (of the type shown in Figs. 3, 4) can be used in place of the independent tubes 2 and 5. Again, the absorber, or damping, tube 8 can be a diode, and even a glow tube; the essential requirement being that the absorber tube be connected across the oscillation circuit to limit, in accordance with collected signal carrier amplitude changes, the amplitude of locally produced oscillations.

In Fig. 2 there is shown a modified method of AVC wherein the mixer tube 2 includes in its cathode circuit the secondary winding 20 of transformer T; the winding being in series with grounded grid bias resistor 21, the latter being by-passed by condenser 22. The tube 23 acts as a coupling tube, and includes in its plate circuit the primary winding 20'. The control grid 23' of tube 23 is connected by condenser 24 to the ungrounded side of oscillation circuit 5'. The grid 23' of tube 23 is connected, through filter resistor 25, to the AVC lead 14. The latter may be connected to the detector resistor 7 as shown in Fig. 1. As the signal amplitude increases, the gain of tube 23 decreases and, therefore, the transmission of local oscillations from circuit 5' to the first detector cathode circuit decreases. For weak signal reception the coupling tube 23 has a maximum transmission efficiency which is dependent upon the initial low negative bias of the grid 23' of tube 23; this bias becomes increasingly negative as the signal amplitude increases. The conversion efficiency of the first detector tube 2 is, also, varied in a novel manner by giving the resistor 21 such a magnitude that the tube 2 is biased for maximum conversion efficiency when receiving weak signals. As the signal amplitude increases the AVC voltage increases, and the operating bias on the signal grid 26 is increased. This results in a conversion efficiency decrease; the AVC lead 19 supplies the signal-controlled bias to tube 2. While this mixer tube control arrangement has been shown combined in Fig. 2 with the oscillator coupling tube control device, it is to be understood that they may be used independently of each other.

In Fig. 3 there is shown an embodiment of my invention wherein a tube 30 of the so-called pentagrid converter type (2A7) is used in a combined local oscillator-first detector stage employing electronic coupling. Such a circuit is well known at the present time, and it will be sufficient to point out that the signal grid 31 of tube 30 is connected to the high alternating potential side of signal input circuit 32. The low alternating potential side of circuit 32 is connected by AVC lead 33 to the anode side of load resistor 7. The cathode of tube 30 is grounded through biasing resistor-condenser network 34.

The local oscillator section of tube 30 comprises the oscillator grid 40 and oscillator anode electrode 41 which are reactively coupled, as at M, to produce local oscillations. The numeral 50 denotes the tunable oscillation circuit which corresponds to circuit 5' of Figs. 1 and 2. The I. F. energy is produced in the plate circuit 60 of tube 30.

After being amplified, the I. F. is impressed upon two diodes, one diode acting in the usual manner for detection and AVC, the drop across its load resistor 7 being filtered and led back by line 33 to the signal grid circuit and/or the I. F. and/or R. F. control grid circuits through filters as previously described. The other rectifier R has the negative end of its load resistor 7' connected to a point of relatively fixed negative potential illustrated by battery 71 whose positive terminal is grounded. The positive end of 7' is connected through an R. F. choke 72 to the return circuit from grid 40. It will be seen that when the signals reaching R are weak, the bias on grid 40 is of considerable magnitude, being the sum of the voltage across source 71 and the drop across 34. If a high positive potential is connected to anode grid 41 at the point marked +, strong oscillations will occur before grid current is drawn by grid 40. As the signal input to rectifier R increases, the increasing drop across 7' decreases the bias on 40 so that grid current is drawn by grid 40 at a lower amplitude of oscillation, thus limiting the oscillation amplitude. It will be seen that the action is similar in principle to that of Fig. 1 except that the grid current of the oscillator is used to introduce damping in Fig. 3, while in Fig. 1 an auxiliary tube is used for this purpose. As only the D. C. component across 7' is utilized, the condenser thereacross is made very large. The condenser across 7 is only large enough to provide a relatively low impedance path for I. F., but a high impedance for A. F. The A. F. is taken from 7 by a suitable connection thereto (not shown).

In the modification shown in Fig. 4 the local oscillation intensity is regulated by varying the direct current voltage of the oscillator anode 41. The oscillator grid 40 is connected to the high alternating potential side of circuit 50 through condenser 80; a leak resistor 81 connecting the

grid 40 to the cathode of tube 30. The oscillator anode 41 is connected for D. C. supply to the plate side of resistor 82 through winding 73' of transformer M, the low side of M being by-passed to ground for R. F. The conversion gain of tube 30 is regulated by the AVC lead 33. The anode side of resistor 7 is connected to the control grid of the first audio amplifier tube 33, while the cathode of the latter is at the grounded diode cathode potential. The positive potential for tube 83 is provided through resistor 84; the audio output of tube 83 is amplified further in the subsequent audio amplifier.

The control grid of reversing tube 90 is connected by lead 91 to the plate side of resistor 84. The cathode of tube 90 is connected to a source of positive potential somewhat higher than the normal potential of the plate of tube 83. The lead 92 connects the plate of tube 90 to the oscillator anode 41. As signal amplitude increases, the negative bias on the grid of tube 83 increases; as a result the plate current flow through resistor 84 decreases, and the negative bias on the grid of tube 90 decreases. Consequently, the plate side of resistor 82 becomes less positive in potential, and the oscillator anode 41 also becomes less positive in potential. This results in a decrease in oscillation strength. The plate supply of the reversing tube 90 should be such that the direct voltage to the oscillator anode 41 never falls low enough to stop oscillations. It will be seen that in this modification the signal grid bias is increased in a negative sense as signal amplitude increases for the purpose of regulating conversion gain; and simultaneously the oscillator anode voltage is varied in the same sense to decrease the local oscillation intensity.

It will be observed that in both Figs. 3 and 4 the gain of the I. F. amplifiers may be varied with mixer gain. In either arrangement the control voltages may be derived from rectifiers independend of the diode detectors. Also, in either of Figs. 3 and 4 the automatic control of signal grid bias may be omitted, and only the oscillator intensity need be varied. It is to be understood that in both Figs. 3 and 4 the oscillator sections of the mixers may utilize independent tubes, as shown in Figs. 1 and 2.

While I have indicated and described several systems for carrying my invention into effect, it will be apparent to one skilled in the art that my invention is by no means limited to the particular organizations shown and described, but that many modifications may be made without departing from the scope of my invention, as set forth in the appended claims.

What I claim is:

1. In a superheterodyne receiver provided with a first detector and local oscillator, the latter having a tunable circuit, means for detecting signals collected by the receiver and deriving a direct current voltage from the signals which varies in magnitude with the carrier amplitude, an absorber tube having its plate to cathode impedance electrically connected across the oscillator tunable circuit so as to provide a damping means therefor, means for applying the direct current voltage to a gain control electrode of the absorber tube in a sense to increase the damping of the tunable circuit as the carrier amplitude increases, and means for normally biasing the absorber tube beyond cut-off.

2. In a receiver of the type including a tunable local oscillator circuit, a first detector circuit and a demodulator network, means including a rectifier connected to the oscillator grid, and responsive to varying signal amplitude, for causing oscillator grid current to flow and thereby damping said oscillator circuit in a sense to decrease the local oscillation intensity as the signal amplitude increases.

3. In a superheterodyne receiver, a converter tube including at least a cathode, an output electrode and at least three auxiliary electrodes serially arranged in the electron stream between the cathode and output electrode, a tuned signal input circuit connected between one of the auxiliary electrodes and the cathode, a resonant tank circuit tuned to a different frequency connected between the cathode and a second of the auxiliary electrodes, a reactive coupling between the third of the auxiliary electrodes and said second one whereby said electron stream is modulated at the frequencies of the signal and tank circuits, a resonant circuit connected to the output electrode and tuned to the difference of the said frequencies, means for producing a voltage whose amplitude varies in dependence on the magnitude of the signal amplitude, and means for applying said voltage to at least one of said reactively coupled auxiliary electrodes thereby automatically controlling the amplitude of the said difference frequency.

4. In a superheterodyne receiver, a converter tube including at least a cathode, an output electrode and at least three auxiliary electrodes serially arranged in the electron stream between the cathode and output electrode, a tuned signal input circuit connected between one of the auxiliary electrodes and the cathode, a resonant tank circuit tuned to a different frequency connected between the cathode and a second of the auxiliary electrodes, a reactive coupling between the third of the auxiliary electrodes and said second one whereby said electron stream is modulated at the frequencies of the signal and tank circuits, a resonant circuit connected to the output electrode and tuned to the difference of the said frequencies, means for producing a voltage whose amplitude varies in dependence on the magnitude of the signal amplitude, and means for applying said voltage to the second one of said reactively coupled auxiliary electrodes thereby automatically controlling the amplitude of the said difference frequency.

5. In a superheterodyne receiver, a converter tube including at least a cathode, an output electrode and at least three auxiliary electrodes serially arranged in the electron stream between the cathode and output electrode, a tuned signal input circuit connected between one of the auxiliary electrodes and the cathode, a resonant tank circuit tuned to a different frequency connected between the cathode and a second of the auxiliary electrodes, a reactive coupling between the third of the auxiliary electrodes and said second one whereby said electron stream is modulated at the frequencies of the signal and tank circuits, a resonant circuit connected to the output electrode and tuned to the difference of the said frequencies, means for producing a voltage whose amplitude varies in dependence on the magnitude of the signal amplitude, means for applying said voltage to at least one of said reactively coupled auxiliary electrodes thereby automatically controlling the amplitude of the said difference frequency, said second and third auxiliary electrodes being disposed between the cathode and the first auxiliary electrode, and

said producing means including a rectifier having an input circuit coupled to said output electrode circuit.

6. In a superheterodyne receiver, a converter tube including at last a cathode, an output electrode and at least three auxiliary electrodes serially arranged in the electron stream between the cathode and output electrode, a tuned signal input circuit connected between one of the auxiliary electrodes and the cathode, a resonant tank circuit tuned to a different frequency connected between the cathode and a second of the auxiliary electrodes, a reactive coupling between the third of the auxiliary electrodes and said second one whereby said electron stream is modulated at the frequencies of the signal and tank circuits, a resonant circuit connected to the output electrode and tuned to the difference of the said frequencies, means for producing a voltage whose amplitude varies in dependence on the magnitude of the signal amplitude, means for applying said voltage to at least one of said reactively coupled auxiliary electrodes thereby automatically controlling the amplitude of the said difference frequency, a detector coupled to the said output electrode circuit, and a rectifier, having an input circuit coupled to said output electrode circuit, producing said voltage.

WALTER VAN B. ROBERTS.