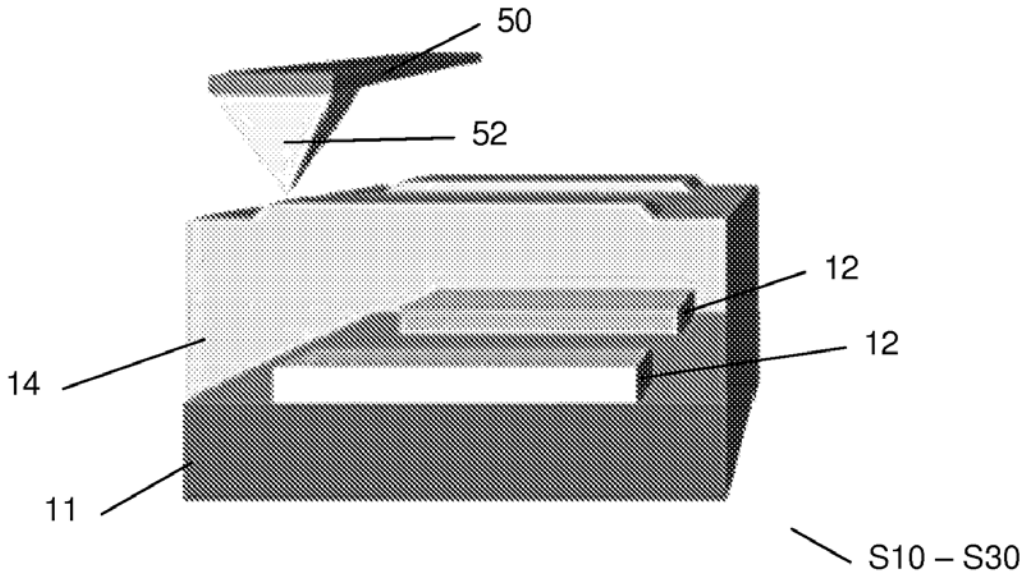

FIG. 1.

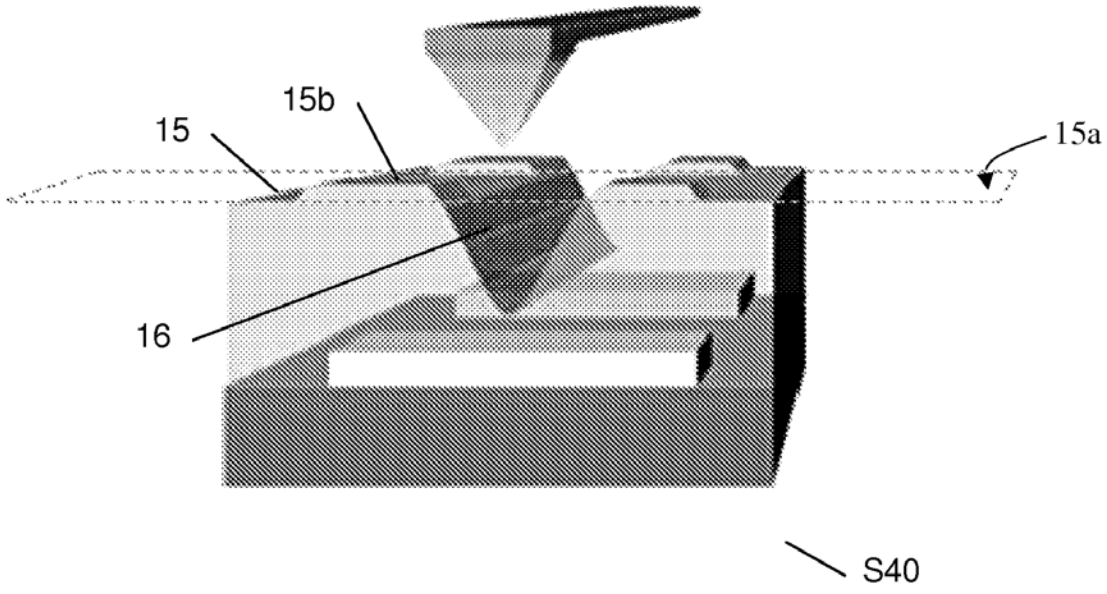

FIG. 2.

MADHUSUDAN S.T.
Of K & S Partners
Agent for the Applicant

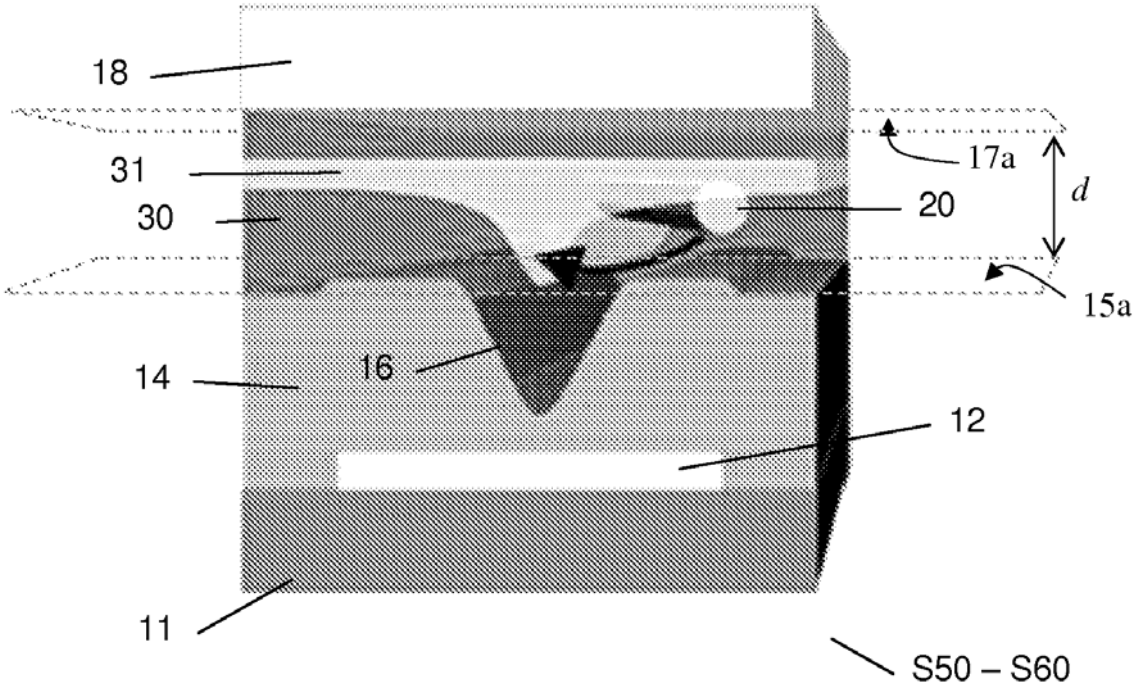

FIG. 3.

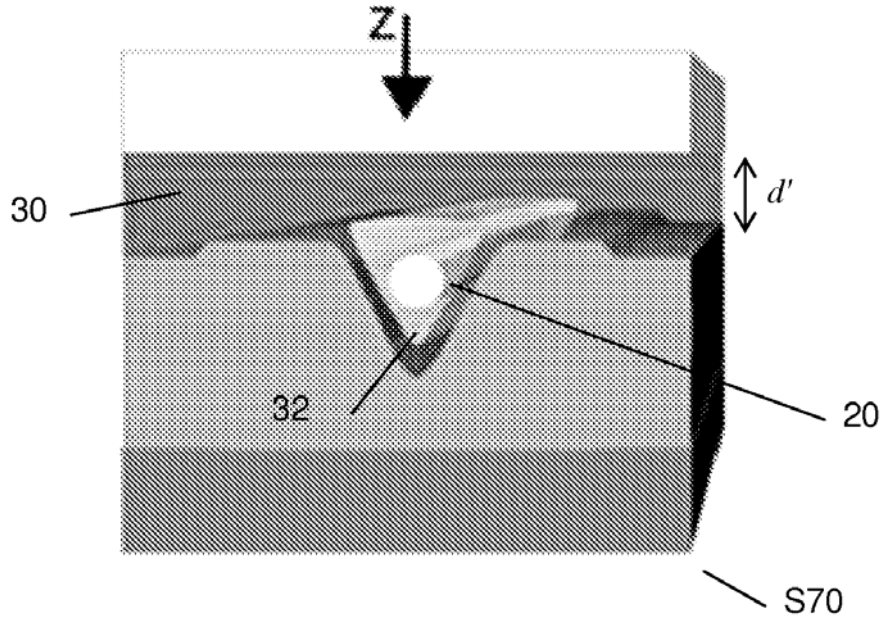

FIG. 4.

MADHUSUDAN S.T.
Of K & S Partners
Agent for the Applicant

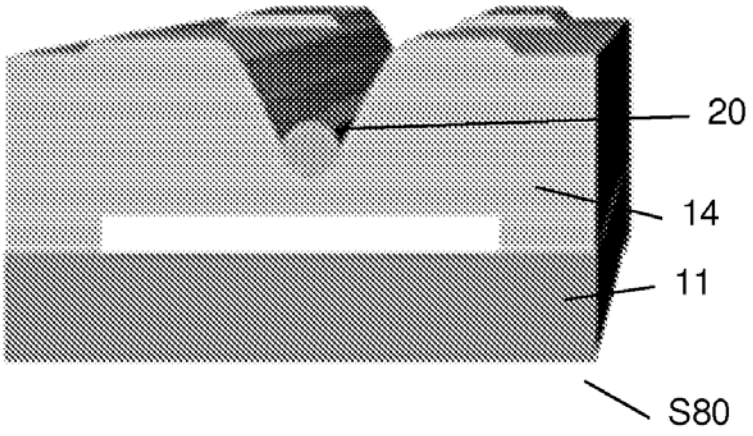

FIG. 5.

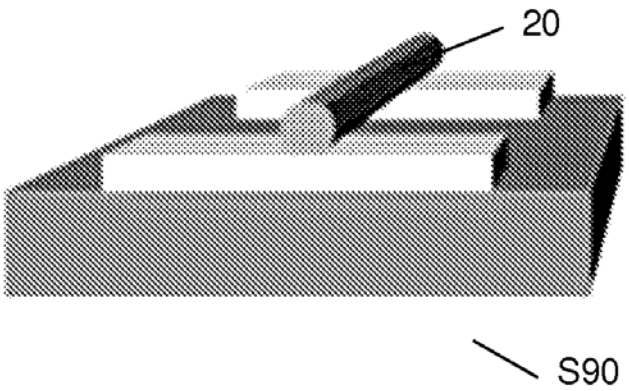

FIG. 6.

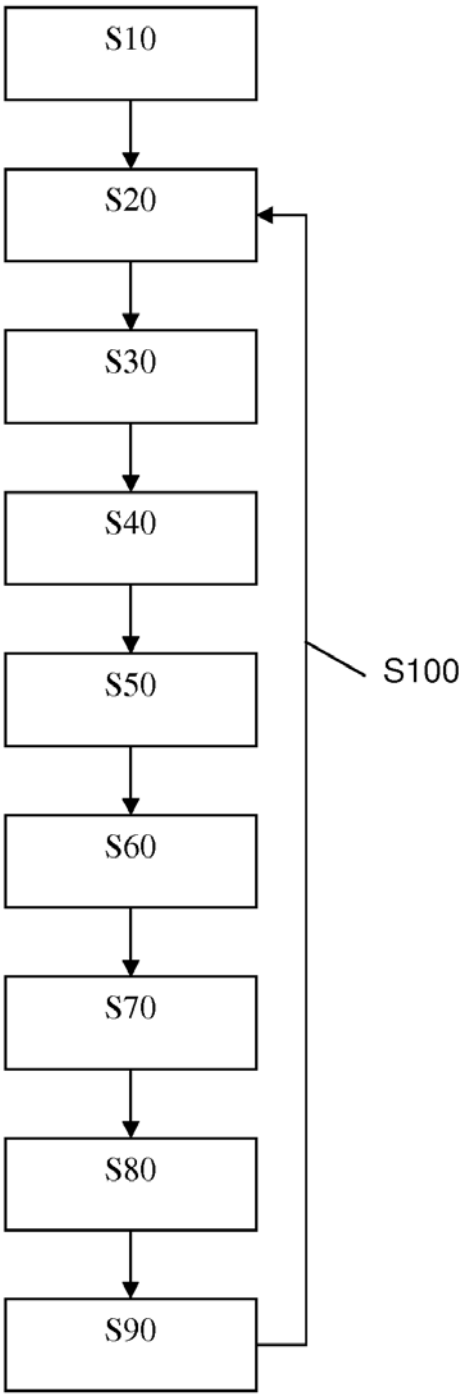

FIG. 7.

MADHUSUDAN S.T.
Of K & S Partners
Agent for the Applicant

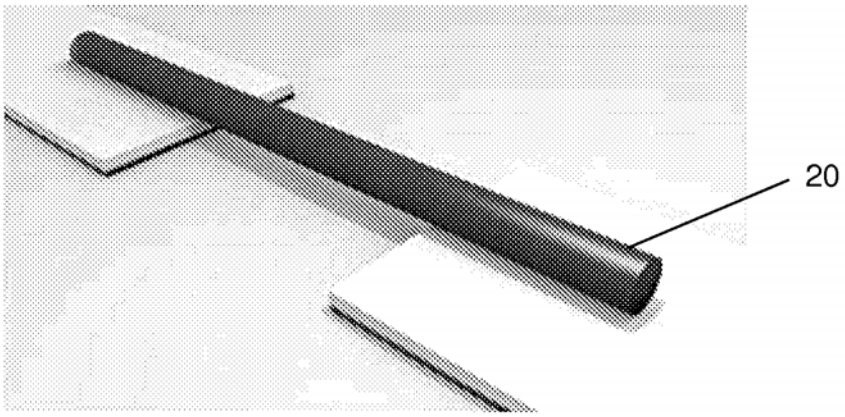

FIG. 8.



FIG. 9.

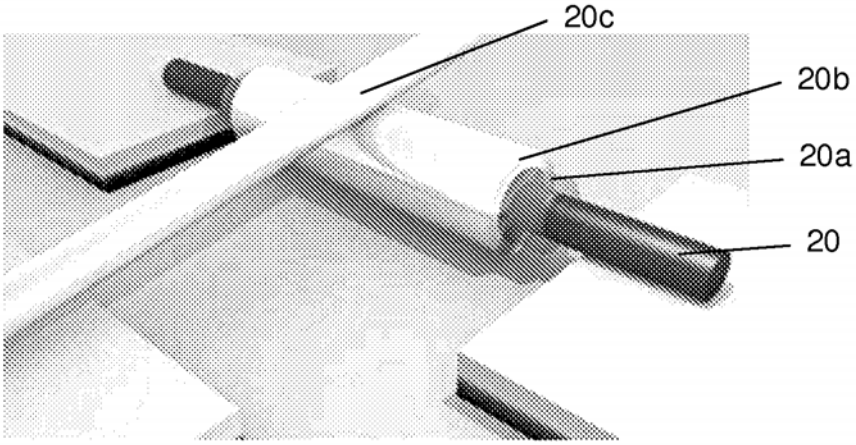

FIG. 10.

MADHUSUDAN S.T.
Of K & S Partners
Agent for the Applicant

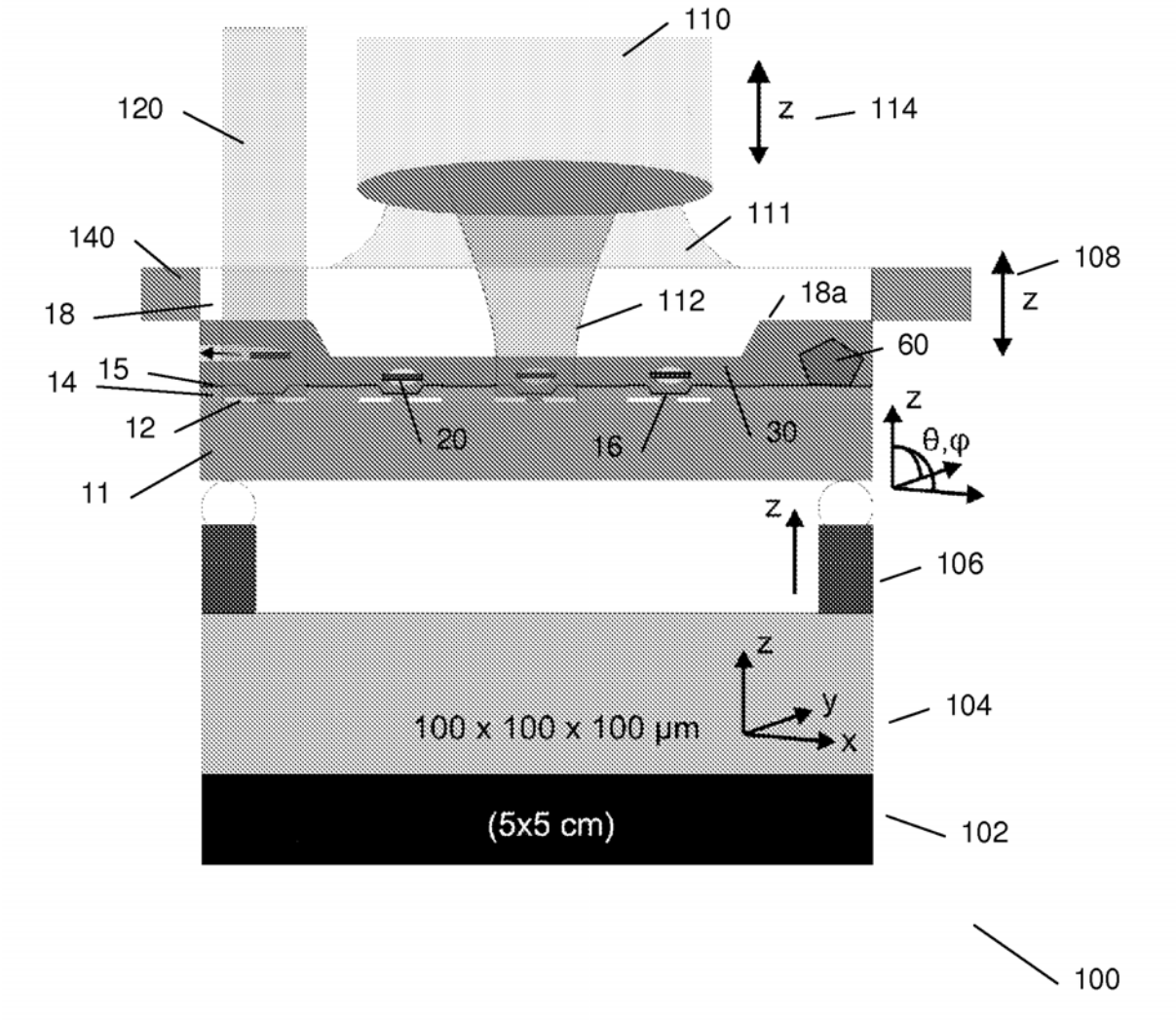
110
120
z
114
111
140
108
18
112
18a
z
60
14
15
12
20
16
30
z
θ,φ
11
z
106
z
y
x
104
100 x 100 x 100 µm
(5x5 cm)
102
100

FIG. 11.

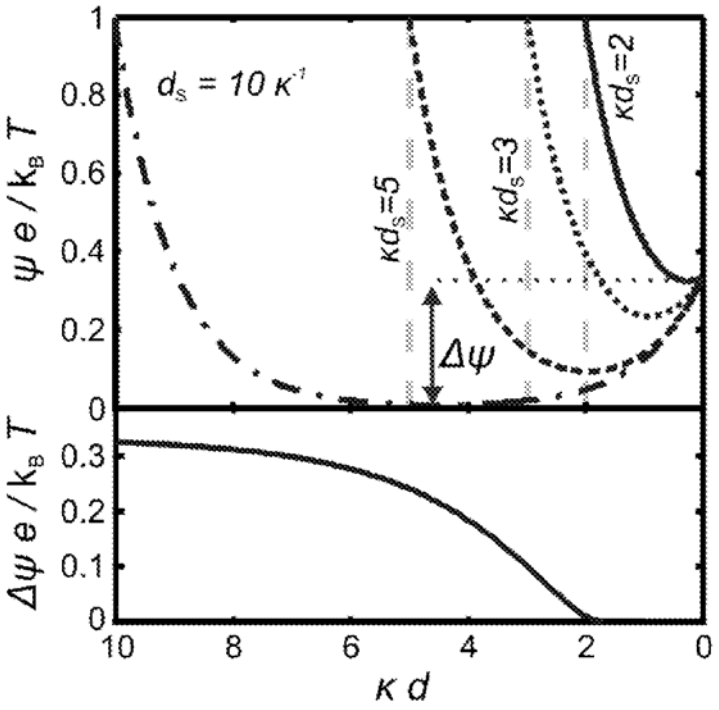

FIG. 12.

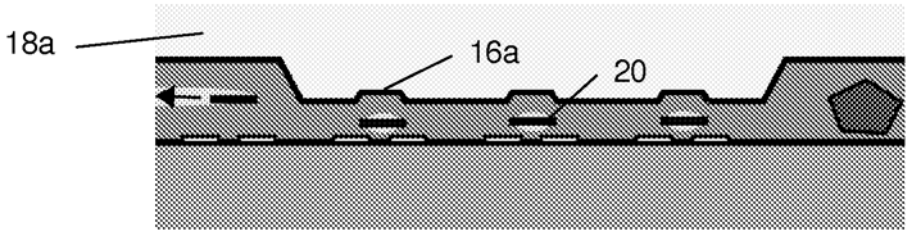

FIG. 13.

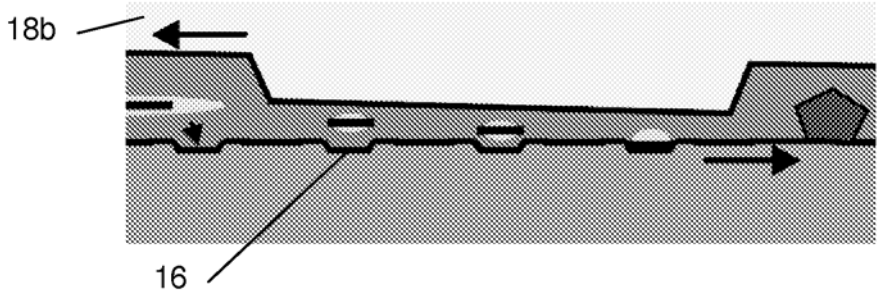

FIG. 14.

MADHUSUDAN S.T.
Of K & S Partners
Agent for the Applicant