July 29, 1969 J. W. IRELAND ET AL 3,457,636

THIN-FILM RESISTOR ADJUSTMENT

Filed Nov. 12, 1964 3 Sheets-Sheet 1

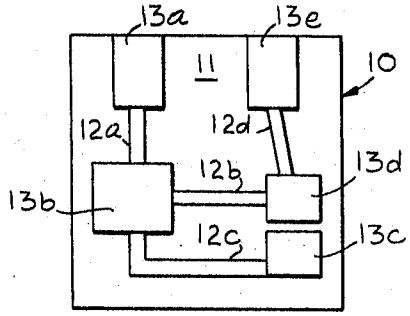

Fig. 1

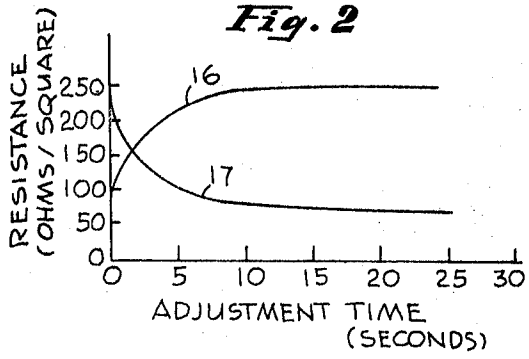

Fig. 2

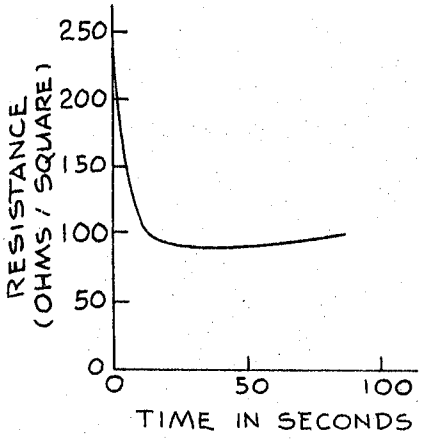

Fig. 3

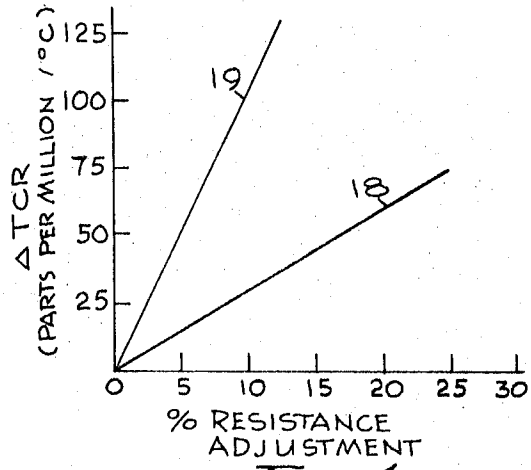

Fig. 4

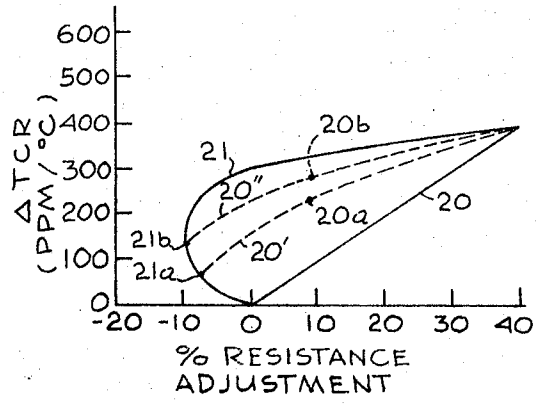

Fig. 5

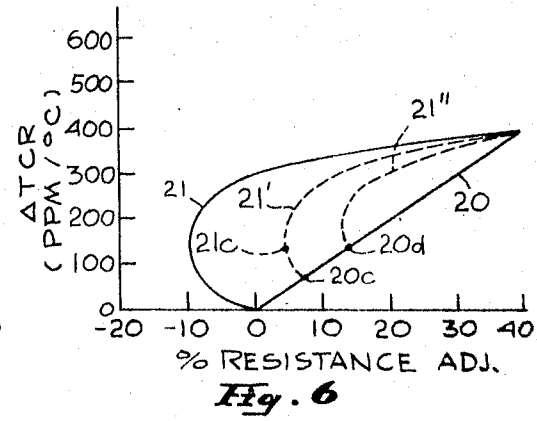

Fig. 6

INVENTORS
JOHN W. IRELAND
JAMES C. HOLLOWAY
BY
Allen M. Sutton
ATTORNEY

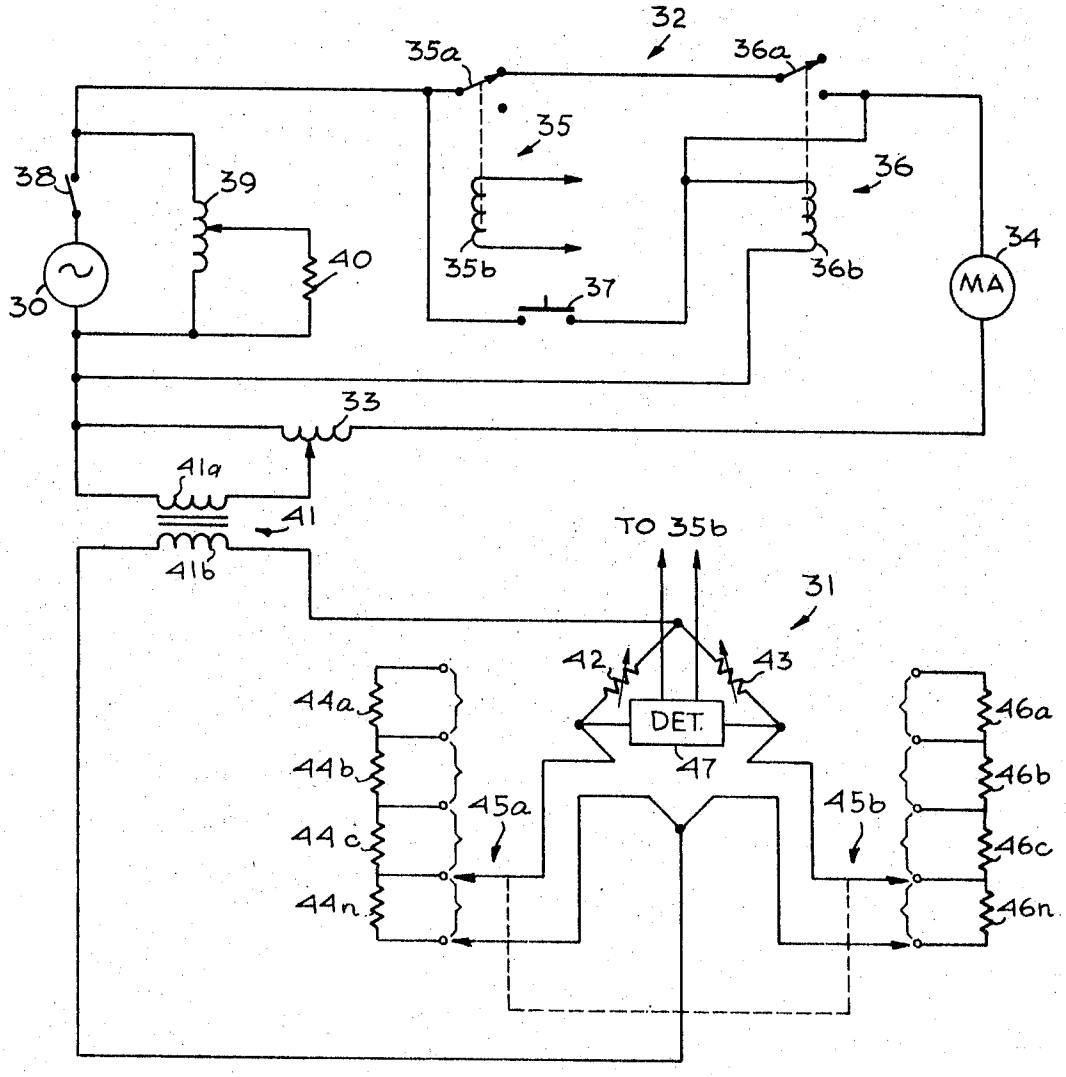

Fig. 7

INVENTORS
JOHN W. IRELAND
JAMES C. HOLLOWAY
BY
Allen M. Sutton
ATTORNEY

July 29, 1969 J. W. IRELAND ET AL 3,457,636

THIN-FILM RESISTOR ADJUSTMENT

Filed Nov. 12, 1964 3 Sheets-Sheet 3

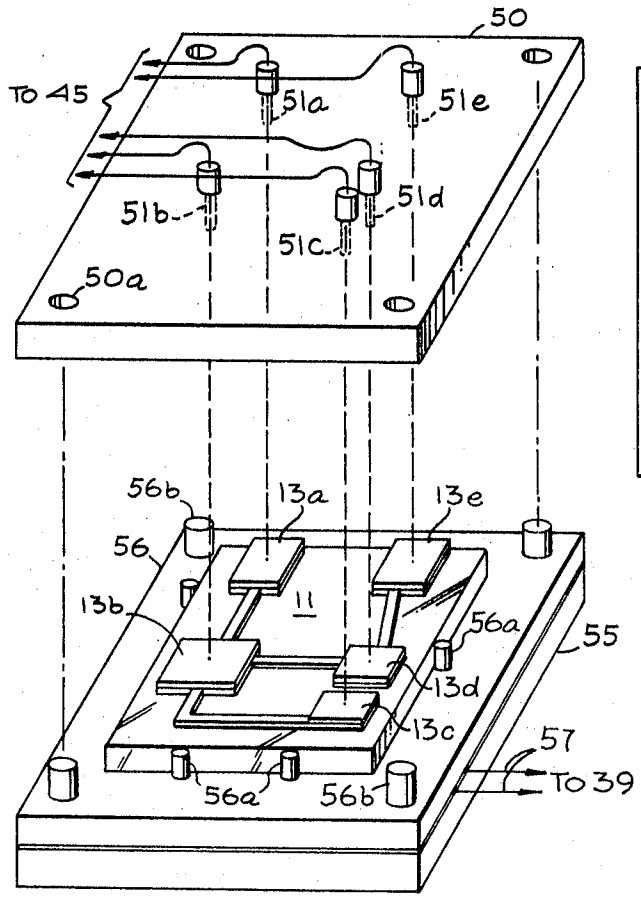

Fig. 9

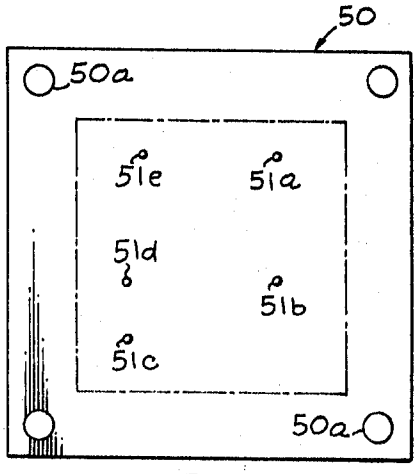

Fig. 8

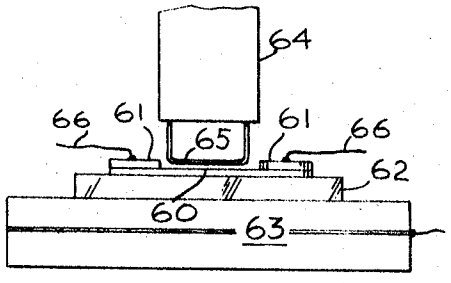

Fig. 10

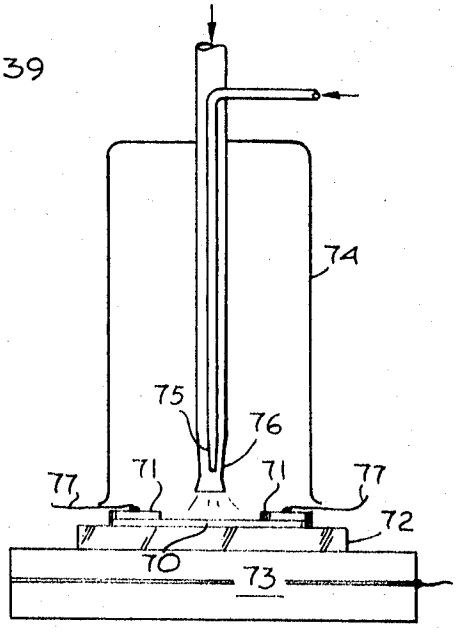

Fig. 11

INVENTORS
JOHN W. IRELAND
JAMES C. HOLLOWAY
BY
Allen M. Sutton
ATTORNEY

United States Patent Office 3,457,636 Patented July 29, 1969

3,457,636

THIN-FILM RESISTOR ADJUSTMENT

John W. Ireland and James C. Holloway, Canoga Park, Calif., assignors to The Bunker-Ramo Corporation, Stamford, Conn., a corporation of Delaware

Filed Nov. 12, 1964, Ser. No. 410,439
Int. Cl. H01c 13/00
U.S. Cl. 29—620 20 Claims

ABSTRACT OF THE DISCLOSURE

Method and means for rapid, accurate, alteration of individual thin-film resistors of a multiresistor network to desired resistance values and temperature coefficients of resistance independently. Alteration to desired values, with close tolerances of these resistor parameters, is obtained by heating to stabilization of resistance value, then for a short duration, heating at high temperature. Desired parameter values are obtained by the heating being effected in successive inert and oxidizing atmospheres in combinations predetermined to provide desired characteristics.

A fixture constructed and apertured to hold the network and apparatus incorporating heat applying means and simultaneous resistance measuring circuitry operate together to effect independent heating under required ambient conditions and durations for each of the network resistors to be altered in resistance value and temperature coefficient of resistance as required. The separate applications of heat to individual resistors is obtained without destruction of adjacent elements by employing electrical current, hot prove or hot gas heat applying means so as to avoid excessive heating of the elements.

This invention relates to thin-film resistors, and, more particularly, to methods and means for adjusting the resistance values and temperature coefficients of resistance of such resistors.

Thin-film resistors per se are known in the art. Such resistors generally comprise a very thin film of metal coated on a glass or ceramic substrate. Various metals have been used for the resistive film, among them being chromium, Chromel-C (a member of the Nicrome family comprising chromium, nickel and iron) and Cermet (which may, for example, comprise chromium and silicon oxide). Such resistors, as manufactured, do not normally provide better than a ±5% tolerance. This, of course, has imposed severe limitations on circuits requiring more precise resistor tolerances, and has required that the resistors be physically altered to bring them to closer tolerances. Such alteration has generally been accomplished by removing material from the resistor itself by scribing, etching, or cutting, or by the use of shorting bars, that is, conductors deposited across the resistor at points between the end electrodes. Scribing and cutting tend to promote unpredictable aging effects and hence loss of tolerance, and etching is not easily controllable. Shorting bars cannot provide tolerances that are sufficiently close for modern military circuits, say ±1%. Furthermore, such physical alteration does not affect the temperature coefficient of resistance of the resistor in any way.

Recent techniques have led to the development of integral thin-film networks, in which the substrate carries both resistors and conductors. Heretofore, no technique has been available for altering the values of individual resistors in such a multi-resistor network except those techniques previously mentioned which involve physically altering each resistor. The present invention eliminates the disadvantages of such techniques and provides methods and means for adjusting the resistance values of thin-film resistors quickly and with a high degree of accuracy. Furthermore, the invention provides a technique whereby the temperature coefficient of resistance of a thin-film resistor may be adjusted independently of the resistance value.

The invention is based on the discovery that the resistance of a thin-film resistor may be adjusted to close tolerance by heating the resistor to a high temperature for a very short period of time. While the resistance of the resistor is being adjusted, the temperature coefficient of resistance (TCR) of the resistor may also be adjusted to very close tolerance. Furthermore, the TCR of the resistor may be adjusted without permanently changing the resistance value of the resistor, or, with a change in resistance value of a predetermined amount.

Each resistor of a multiresistor thin-film network may be individually adjusted utilizing the teachings of the invention. Each resistor may be heated in various ways, such as by passing a relatively high electrical current through the resistor, by bringing a hot probe adjacent it, or by subjecting the resistor to a flow of hot gas. If the resistor is made of an oxidizable metal such as chromium, and the heating is carried out in an oxidizing atmosphere, the resistance value of the resistor will rise as it is heated. It is assumed, of course, that the resistor is uncoated so that it is oxidizable. If an uncoated resistor is heated in an inert atmosphere, its resistance value will decrease initially and then will start to rise with the passage of time. In both cases, the TCR of the resistor increases. If a coated resistor is heated according to the invention, its resistance value will decrease while its TCR will increase. This is believed to be due to annealing of the resistor material.

According to another feature of the invention, an uncoated oxidizable resistor may be heated in inert and oxidizing atmospheres, one after the other, to adjust the TCR of the resistor to a desired value. During that process, the resistance value of the resistor may be adjusted to a predetermined desired value, or the process may be so carried out as to produce no permanent change in the resistance value of the resistor.

In the event that individual resistors are heated by passing electrical current through them, means are provided for automatically monitoring the resistance value as the resistor is being heated, and for terminating the heating when a desired value has been attained.

The invention, together with further advantages and features thereof, will be better understood from the following description of several embodiments, taken in conjunction with the accompanying drawings, in which:

FIGURE 1 is a plan view of a simplified multiresistor thin-film network;

FIGURE 2 is a graph showing typical resistance adjustments as a function of adjustment time;

FIGURE 3 is a graph showing resistance adjustment as a function of adjustment time of a specific thin-film resistance material;

FIGURE 4 is a graph showing the change in TCR as a function of resistance adjustment of two specific thin-film resistance materials;

FIGURES 5 and 6 are graphs useful in understanding the simultaneous adjustment of resistance and TCR;

FIGURE 7 is a circuit diagram of means for individually adjusting a plurality of resistors by passing electric current through them;

FIGURE 8 is a perspective view of a multi-probe head useful in conjunction with the circuit of FIGURE 7;

FIGURE 9 is a perspective view of an adjustment assembly useful with the circuitry shown in FIGURE 7; and

FIGURES 10 and 11 are elevational views of apparatus useful in adjusting resistances according to other embodiments of the invention.

FIGURE 1 illustrates a multiresistor thin-film network **10**, shown in much simplified form. In actual practice, such networks are usually quite complex and comprise many resistors and conductors. As shown, the network **10** comprises a substrate **11**, which carries a plurality of resistors **12***a*–**12***d*, and a plurality of conductors **13***a*–**13***e*. The substrate **11** generally consists of glass or glazed ceramic, with glass being used in most instances because of its lower cost and smoother surface.

The resistors **12** may consist of a relatively high-resistance material such as chromium, Chromel-C, or Cermet, the latter two materials also containing chromium. The particular type of resistive material used is dependent upon the desired characteristics of the final resistor, and the present invention is in no way limited to the use of any particular resistive material. Characteristics of three typical resistive materials are shown in Table I. Particular values within the various ranges shown in the table may be obtained by control of the process by means of which the material is deposited on the substrate, as is well known in the art.

TABLE I

Material	Resistance (ohms/square)	TCR (p.p.m./° C.)
Chromel-C	25–500	−25–+25
Chromium	25–500	−250–0
Cermet	100–10,000	−500–−50

The conductors **13** generally consist of a very low resistance material such as gold or gold-copper. Here again, however, the invention is not limited to the use of any particular materials for the conductors.

The resistors **12** and the conductors **13** may be deposited on the substrate **11** by any one of various known means. For example, they may be vacuum deposited by evaporation or by sputtering, or they may be plated on the substrate. In addition, the resistors may be left uncoated or they may be coated with a protective material such as silicon monoxide, depending upon the use to which the network is to be put and the atmosphere in which it will be used. The problem that the present invention solves is that of individually adjusting the resistors **12***a*–**12***d* quickly and to very close tolerances. As previously mentioned, adjusting the resistors has heretofore been done by physically altering their geometry such as by abrading or etching the individual resistors. Such processes are time-consuming and do not provide resistance value tolerances sufficiently low for use in many modern-day circuits.

A solution to the foregoing problem is provided by the present invention, which is based upon the discovery that the resistance values of the various resistors of the network can be individually adjusted in a matter of seconds by heating the individual resistors, one at a time, to a high temperature. The heating process may be accomplished either by passing an electrical current through each resistor, by bringing a small heated filament over the resistor, or by applying hot gas directly on the resistor. The specific methods and means used in heating the resistors will be described in detail hereinafter. First, however, the temperature to which each resistor is heated, the period of time for which it is heated, and the result on the characteristics of the resistor will be considered.

It is well known that the resistance value of a thin-film resistor is relatively unstable without further treatment after deposition. This condition, of course, cannot be tolerated in precision circuitry. Therefore, the resistor is aged at an elevated temperature to stabilize its resistance value so that it will undergo very little, if any, change during the life of the resistor. In the present case stabilizing is accomplished by aging the resistor for 18 or 20 hours at a temperature of 250° C. It may conveniently be accomplished by placing the substrate containing the entire network in an oven for the required length of time. During the aging and stabilizing process, the resistance and the TCR of an uncoated resistor increase; during that process the resistance of a silicon-monoxide coated resistor decreases while its TCR increases. Thus, caution must be taken to insure that the initial resistance values are not too high or too low to permit proper stabilizing without the resistance and TCR values exceeding the desired values.

It has been discovered that, after a thin-film resistor has had its resistance value stabilized, its resistance value may be adjusted by further heating the resistor at a more elevated temperature for a short period of time. Although the temperature to which the resistor is heated and the length of time for which it is heated vary inversely with each other (although not proportionally) for a given change in resistance, it is preferred that the resistor be heated at a relatively high temperature for a relatively short period of time. For example, if the resistor is heated to a temperature higher than 300° C., a period of less than 30 seconds is required to change its resistance by the maximum extent possible. FIGURE 2 presents curves showing the amount of resistance adjustment possible utilizing the method of the invention. A curve **16** shows the increase in resistance of an uncoated resistor as it is heated for various periods of time, and a curve **17** shows the decrease in resistance of a coated resistor as it is heated for various periods of time. As shown, the resistance value of a resistor may be adjusted by more than 100%. However, in practice, resistors are not adjusted by more than about 25% of their initial value. In other words, the adjustment takes place on the relatively steep portion of the curves **16** and **17** in a time of 5 seconds or less. FIGURE 3 shows an actual curve of resistance versus adjustment time for Chromel-C which was heated by passing current through the resistor.

As previously noted, whether the resistance value of a resistor is adjusted upwardly or downwardly, its TCR always increases. This is shown by FIGURE 4, which represents the change in TCR as a function of the percent resistance adjustment for a coated resistor made of Chromel-C and for an uncoated chromium resistor. The increase in TCR for Chromel-C is approximately 3 parts per million (p.p.m.) per degree centigrade for each 1% change in resistance, as shown by a curve **18**. The change in TCR for chromium is much greater, as shown by a curve **19**, and approximates 10 parts per million per degree centigrade for each 1% change in resistance.

One of the outstanding features of the invention is that the TCR of a resistor may be adjusted independently of adjustment of the resistance value of the resistor. This is shown graphically by the curves presented in FIGURES 5 and 6. These figures are based on data derived from heating uncoated chromium resistors in oxidizing and in inert atmospheres. Looking first at FIGURE 5, a curve **20** represents the change in TCR versus the percent resistance adjustment of the chromium resistor when it is heated to a temperature in the range of 425° C. to 450° C. in an oxidizing atmosphere. Similarly, a curve **21** represents the change in TCR versus percent resistance adjustment when the resistor is heated in an inert atmosphere. It is apparent from the curve **21** that the resistance value of the resistor first decreases and then increases as the TCR increases with continued heating of the resistor. By combining the effects of heating in inert and oxidizing atmospheres, various changes in TCR and resistance can be obtained simultaneously. For example, if it is desired to increase the resistance value of a resistor by approximately 9% and increase its TCR by approximately 225 parts per million, the resistor could first be heated in an inert atmosphere until its characteristics correspond to those indicated at point **21***a* and then could be heated in an oxidizing atmosphere until the desired characteristics are obtained at point **20***a* on curve **20′**. Similarly, if it is desired to adjust the resistance up-

wardly by approximately 10% and the TCR upwardly by approximately 280 parts per million, the resistor could be heated in an inert atmosphere until its characteristics are as indicated at point 21*b*, and then heated in an oxidizing atmosphere until its characteristics reached their desired values at point 20*b* on curve 20''. Of course, the resistor could be entirely adjusted in an inert atmosphere or in an oxidizing atmosphere if the desired characteristics could be obtained in that manner.

FIGURE 6 presents a situation which is the reverse of that shown in FIGURE 5, in that a resistor is first adjusted in an oxidizing atmosphere so that its characteristics follow along the curve 20 and is then further adjusted in an inert atmosphere. For example, if it is desired to increase the TCR of a resistor by approximately 130 parts per million and increase its resistance by approximately 5%, the resistor might first be heated in an oxidizing atmosphere until its characteristics correspond to those at point 20*c* on the curve 20 and then further heated in an inert atmosphere until its characteristics are as represented by the point 21*c* on curve 21'. If it is desired to increase the TCR and resistance of the resistor by a greater amount, it might be treated in an oxidizing atmosphere until its characteristics correspond to the point 20*d*, after which it would be treated in an inert atmosphere until its characteristics corresponded to the desired point on curve 21''.

It is understood, of course, that the particular curves presented in FIGURES 5 and 6 are merely representative ones and that many other changes in TCR and resistance value can be obtained by sequentially heating a resistor in inert and oxidizing atmosphere, one after the other.

As was previously mentioned, heating of a resistor to the desired temperature range of 425° C. to 450° C. may be accomplished by passing electrical current through the resistor, by bringing a hot probe adjacent to the resistor, or by directing hot gases against the resistor. FIGURE 7 is a circuit diagram of means for individually adjusting a plurality of resistors by passing electrical current through them. Although direct current can be used for heating a thin-film resistor in accordance with the invention, it has been found that alternating current is preferable. Therefore, power is supplied to the circuitry shown in FIGURE 7 by an alternating current source 30, which may be a conventional 60 cycle, 110 volt supply.

Essentially, the circuitry shown in FIGURE 7 comprises a bridge arrangement, indicated generally by the numeral 31, and means for selectively energizing and deenergizing the bridge arrangement, such means being indicated generally by the numeral 32.

Consider first the means 32 for selectively energizing and deenergizing the bridge arrangement 31. The means 32 comprise an autotransformer 33 connected in series with a milliammeter 34 across the alternating current source 30 through a normally closed contact 35*a* of a relay 35, a normally open contact 36*a* of a relay 36, and a line switch 38. Relay 35 has a coil 35*b* which is energized from the bridge arrangement 31 in a manner to be hereinafter described, and the relay 36 has a coil 36*b* which is connected across the alternating current source 30 through a momentary contact switch 37 and through the line switch 38. Also connected across the alternating current source 30 is an autotransformer 39, between whose movable arm and one end is connected a resistance heater shown as a resistor 40, the purpose of which will be later described. A primary winding 41*a* of a transformer 41 is connected between the movable arm and one end of the autotransformer 33 and power for the bridge arrangement 31 is derived from a secondary winding 41*b* of the transformer 41.

The bridge arrangement 31 comprises a Wheatstone bridge having four arms, two adjacent arms of which comprise variable resistors 42 and 43. The other two arms of the bridge arrangement 31 are adapted to have resistors to be tested and standard wire-wound resistors, respectively, sequentially switched into them. As shown, a plurality of resistors 44*a*–44*n*, whose resistance values are to be adjusted, are respectively connected between pairs of contacts of a first section 45*a* of a two-section stepping switch. A second section 45*b* of the stepping switch, which is mechanically connected to the first section 45*a*, has connected between its plurality of pairs of contacts a plurality of standard resistors 46*a*–46*n*. Each section of the switch is provided with a pair of poles which may be sequentially moved between the various pairs of contacts. The resistors 44 to be adjusted and the standard resistors 46 are so arranged with respect to each other that when a switch is positioned to put, for example, the resistor 44*n* into the Wheatstone bridge, the standard resistor 46*n* is placed in the adjacent arm of the bridge. The standard resistor, of course, represents the resistance value to which the resistor 44 is to be adjusted.

The bridge 31 is energized from the transformer 41 by connecting points between the variable resistors 42 and 43 and between the resistors 44 and 46 to opposite ends of the secondary winding 41*b* of the transformer. Detector means 47, such as a null detector or a phase detector, is connected between the other two juncture points of the bridge. The detector means 47 functions to provide an output signal when the bridge 31 is balanced. The output signal of the detector means 47 is connected to energize the coil 35*b* of the relay 35 in the energizing section 32.

To operate the adjusting means shown in FIGURE 7, the line switch 38 is first closed and then the momentary contact switch 37 is closed. This energizes the coil 36*b* of the relay 36, which in turn closes the normally open contact 36*a*, which energizes the autotransformer 33 and the transformer 41. When the contact 36*a* is closed, power is supplied to the relay coil 36*b* until the contact of 35*a* of relay 35 opens. It is assumed, of course, that the resistors 44 to be adjusted and the standard resistors 46 have been properly connected into the stepping switch 45 and the switch set to a desired position before the circuit is energized.

Current from the secondary winding 41*b* of the transformer 41 flows through the bridge arrangement 31, including a resistor to be adjusted, and a standard resistor. The current flowing through the resistor to be adjusted heats the resistor to be adjusted so that its resistance value and TCR are varied in the manner heretofore described. The amount of current flowing through the resistor to be adjusted is controlled by the setting of the autotransformer 33. An indication of that current is provided by the milliammeter 34 in series with the autotransformer 33.

When the resistance value of the resistor 44 being adjusted has reached that of the standard resistor 46 to which it is being compared, the detector means 47 provides an output which energizes the coil 35*b* of the relay 35. This, in turn, opens the normally closed contact 35*a* of the relay and deenergizes the circuit. The stepping switch 45 may then be advanced to the next position and another resistor adjusted in the manner previously described. The process is thus continued until all of the resistors 44 have been adjusted. The standard resistors 46 are much larger physically than the resistors 44. Thus they easily dissipate the heat caused by the current flowing through them and their values remain unchanged.

It is pointed out that resistor adjustment using circuitry such as shown in FIGURE 7 may be carried out in either an inert or an oxidizing atmosphere in the manner heretofore described.

One of the features of the present invention is that the circuitry shown in FIGURE 7 can be used to individually adjust each resistor in a multiresistor thin-film network of the type shown in FIGURE 1. Electrical contact may be made with the resistors on a substrate by using a multiple-probe fixture such as is shown in FIGURE 8,

which is designed for the particular resistor configuration on the substrate. The multiple-probe fixture may comprise a plate of insulating material **50** having a plurality of spring-loaded electrical probes **51***a*–**51***e* extending through holes in the plate. The probes **51** are so arranged that when the fixture is placed in contact with a substrate bearing a multi-resistor network, each of the probes contacts one of the conductors. The probes are so arranged in the fixture shown in FIGURE 8 that if it is used to test the network shown in FIGURE 1, the probes **51***a* through **51***e* respectively contact the conductors **13***a* through **13***e* on the substrate. The probes are electrically connected to the contacts of the switch section **45***a* of the switch **45** shown in FIGURE 7. It is particularly pointed out that a fixture must be specially designed for each substrate network configuration. The plate **50** also has a plurality of apertures **50***a* therein which are used for registration purposes as will be later described.

FIGURE 9 illustrates an adjustment assembly utilizing the multiprobe fixture **50** previously described with reference to FIGURE 8. The assembly comprises a base **55** made of a suitable material on which is mounted a substrate holder and heater **56**. The substrate holder and heater **56** may consist of a stainless steel plate which is heated by an electrically insulated Nichrome ribbon. The heater ribbon is not shown but conductors thereto are indicated by the numeral **57**. The conductors **57** are connected to the autotransformer **39** shown in FIGURE 7, wherein the heater ribbon is represented by the resistor **40**.

It has been found desirable to heat the substrate during the resistor adjustment process to reduce thermal stress in the substrate and also to aid in the adjustment itself. Also, by heating the substrate, a lower current through the resistor under adjustment may be used to achieve a given rate of adjustment. Typical temperatures for the substrate holder and heater **56** for various resistor material configurations are shown in Table II.

TABLE II

Material:	Heater temp., ° C.
Silicon oxide coated Chromel-C	200–225
Silicon oxide coated Cermet	200–225
Silicon oxide coated chromium	200–225
Uncoated chromium	140–160

The substrate holder and heater **56** is provided with a plurality of pins **56***a* extending from its upper surface which define the position of the substrate **11** and between which the substrate fits. The substrate holder and heater **50** is also provided with a second plurality of pins **56***b*, which fit into the openings **50***a* in the multiple-probe fixture **50** to insure proper registration of the probes **51***b* with the conductors on the substrate **11**. After the substrate is properly positioned on the holder and heater **56**, the multiple-probe fixture **50** is lowered into position so that the electrical probes **51***b* engage the conductors of the multiresistor network carried by the substrate. The fixture **50** may be held in position, while the adjustment of the resistor proceeds, by conventional means such as springs, weights or clamps.

Table III presents data relating to six typical resistors whose resistance values were adjusted by passing electrical current through the resistors. All of the resistors were adjusted in an oxidizing atmosphere so that the resistance values of the uncoated resistors increased. The data relating to the power in watts per square inch dissipated by the resistor being adjusted relates to the power dissipation at the beginning of the adjustment period. Of course, assuming that the voltage across the resistor is maintained constant, as the resistance value increases, the power dissipated decreases. Conversely, if the resistance value is adjusted downwardly, as in the case of a coated resistor, the power dissipation increases during the adjustment process.

TABLE III

Material	Resistance (Ω) Before	Resistance (Ω) After	Adjustment, time (sec.)	Power in watts/sq. inch
Uncoated chromium	1,927	2,156	13	570
Do	1,943	2,151	6	615
Do	975	1,095	15	570
Coated Cermet	72	59	4	990
Do	8,250	8,190	3	407
Coated Chromel-C	1,950	1,879	2	565

As was previously mentioned, each resistor of a multiresistor thin-film network may be heated by means other than by passing electrical current through it. FIGURE 10 illustrates, in diagrammatic form, an arrangement whereby a resistor **60** having end conductors **61** is adjusted by means of radiant heat. The resistor **60** is carried on a substrate **62** which is mounted on a heated holder **63**. The resistor is heated for adjustment by bringing a probe **64** having a heating element **65** adjacent the surface of the resistor. The heating element **65** may conveniently be a nicrome wire which is heated to a temperature of 900°–1000° C. by passing electrical current through it. The heating element is brought to within an approximately .01 inch of the resistor surface to effect the adjustment. During the adjustment process, the resistance value of the resistor **60** may be monitored by an ohmmeter (not shown) connected between the end conductors **61** by means of leads **66**. Of course, when the resistance value has reached the desired value the probe and heating element are removed from the vicinity of the resistor. Again, as with the electrical adjustment method previously described, the holder **63** on which the substrate is mounted is heated to reduce the stress in the substrate and aid in the adjustment process.

Table IV presents data for four typical uncoated chromium resistors which have been adjusted by means of radiant heat as shown in FIGURE 10. The data relating to TCR is in parts per million per degree centigrade change in temperature.

TABLE IV

Before adjustment		After adjustment	
Resistance, Ω	TCR	Resistance, Ω	TCR
6,733	−460	10,000	−66.5
6,759	−450	10,000	−66.5
2,496	−448	3,317	−184
6,881	−435	10,010	−68

FIGURE 11 illustrates diagrammatically still another method for adjusting the resistance value of a thin-film resistor. As shown, a thin-film resistor **70** having end conductors **71** is carried by substrate **72**. During the adjustment procedure, the substrate **72** is mounted on a heated holder **73** as in the methods previously discussed. This embodiment differs from those previously described, however, in that hot gases are directed against the resistor to heat it to the proper temperature for adjustment. A cylinder **74** of glass or other appropriate material is placed about the resistor **70** with sufficient space being left between the bottom of the cylinder and the top of the substrate **72** for gas to escape freely. Hot gas is directed against the surface of the resistor **70** through nozzles **75** and **76**. One of the nozzles **75** and **76** may be connected to a source of hot inert gas, such as hydrogen, helium, argon or neon, and the other nozzle may be connected to a source of hot oxidizing gas such as air. Thus, the resistance value of the resistor **70** may be adjusted in either an inert or an oxidizing atmosphere or in both, one after the other, as previously described. The resistance value may be monitored during the adjustment process by means of an ohmmeter (not shown) connected between leads **77** which are electrically connected to the end conductors **71**.

It is now apparent that the invention provides methods and means for quickly and accurately adjusting the values of resistors in an integral thin-film network. Each resistor in the network has its resistance value adjusted independ-

ently of all other resistors in the network. Resistors so adjusted have been found to maintain their resistance values to better than ±0.1% after thousands of hours of use. Furthermore, the TCR of a resistor may be adjusted without permanently altering the resistance value. It is pointed out that various parameters of the adjustment process may be determined empirically to fit different situations without departing from the true spirit and scope of the invention.

We claim:

1. A method of adjusting the resistance value of a thin-film resistor carried by a substrate so as to permit achieving resistance adjustments which may be 25% or greater, said method comprising the steps of:

aging the resistor at a temperature and for a time duration sufficient to stabilize the thin-film resistor, and

heating the thin-film to a temperature in excess of its aging temperature by an amount and for a time duration sufficient to provide a desired adjustment in its resistance value, which adjustment may be 25% or greater depending upon the choice of temperature and time duration, said time duration including a continuous heating period substantially greater than 100 milliseconds.

2. The invention in accordance with claim 1,

wherein the step of aging is carried out at a temperature below 300° C., and

wherein the step of heating the resistor to adjust its resistance value is carried out at temeprature above 300° C.

3. A method of adjusting the resistance value of a stabilized thin-film resistor comprising the steps of:

aging the resistor at a temperature and for a time duration sufficient to stabilize its resistance value, and

heating the thin-film resistor to a temperature in excess of its aging temperature by an amount and for a time duration sufficient to provide an adjustment in its resistance value of at least 15%.

4. A method of adjusting the resistance value of a stabilized thin-film resistor carried by a substrate so as to permit achieving resistance adjustments which may be 25% or greater, said method comprising the step of:

heating the thin-film resistor to a temperature in excess of 300° C. for a time duration sufficient to provide a desired adjustment in the resistance value of the thin-film resistor, which adjustment may be 25% or greater depending upon the choice of temperature and time duration, said time duration including a continuous heating period substantially greater than 100 milliseconds.

5. The invention in accordance with claim 4,

wherein said period is at least one second.

6. The invention in accordance with claim 4,

wherein said method is sequentially applied to each of a plurality of thin-film resistors on a common substrate, whereby the resistance value of each resistor can be separately adjusted.

7. The invention in accordance with claim 4,

wherein said method includes monitoring the resistance value of the thin-film resistor during the adjustment of its resistance value and automatically terminating the heating when the desired adjustment in resistance is obtained.

8. The invention in accordance with claim 4,

wherein the step of heating is accomplished by passing electrical current through said resistor.

9. The invention in accordance with claim 4, wherein said method also includes the step of:

heating the substrate during the adjustment of the resistance value of the resistor to reduce thermal stress in the substrate and aid in the resistance adjustment by reducing the heat required therefor.

10. A method of adjusting the resisance value of a stabilized thin-film resistor carried by a substrate, said method comprising the steps of:

aging the resistor at a temperature below 300° C. for a period of time sufficient to stabilize its resistance value,

heating the thin-film resistor to a temperature in excess of 300° C. for a time duration sufficient to provide a desired adjustment in the resistance value of the thin-film resistor, and

heating the substrate within the range of 140° C. to 225° C. during the adjustment of the resistance value of the resistor to reduce thermal stress in the substrate and aid in the resistance adjustment by reducing the heat required therefor.

11. A method of adjusting a temperature-stabilized thin-film resistor carried on a substrate to a desired resistance value and to a desired temperature coefficient of resistance, said method comprising the steps of:

forming the temperature-stabilized thin-film resistor so that it exhibits a first rate of change of resistance with temperature coefficient of resistance when heated above the stabilization temperature in a first atmosphere and exhibits a second and substantially different rate of change of resistance with temperature coefficient of resistance when heated above the stabilization temperature in a second atmosphere, and

sequentially heating the temperature-stabilized thin-film resistor in said first and second atmospheres for time durations chosen to provide desired predetermined values of resistance and temperature coefficient of resistance.

12. The invention in accordance with claim 11,

wherein the rate of change of resistance with temperature coefficient of resistance in one of said first and second atmospheres is in an opposite direction to that in the other for at least a portion of the respective time duration.

13. A method of modifying a thin-film resistor by adjusting the resistance and independently the temperature coefficient of resistance of the film carried by a substrate comprising the steps of:

heating the resistor to a temperature in excess of 300° C. starting with an inert atmosphere followed by an oxidizing atmosphere for time durations in each atmosphere in accordance with the film material and manner of deposition on said substrate, and the predetermined desired resistance and temperature coefficient of resistance, the heating in each atmosphere being continuously maintained for substantially greater than 100 milliseconds.

14. A method of modifying a thin-film resistor by adjusting the resistance and independently the temperature coefficient of resistance of the film carried by a substrate comprising the steps of:

heating the resistor to a temperature in excess of 300° C. starting with an oxidizing atmosphere followed by an insert atmosphere for time durations in each atmosphere in accordance with the film material and manner of deposition on said substrate, and the predetermined desired resistance and temperature coefficient of resistance, the heating in each atmosphere being continuously maintained for substantially greater than 100 milliseconds.

15. A method of manufacturing a thin-film network comprising at least one thin-film resistor of desired resistance value and temperature coefficient of resistance parameters with close tolerance, said method comprising the steps of:

depositing a thin-film of appropriate characteristics and in a manner of depositing to provide a thin-film resistor which is within an approximate range of desired resistance value and temperature coefficient of resistance characteristics upon a substrate to form a thin-film resistor.

aging said resistor for a period of time sufficient to stabilize the value of its resistance and of its temperature coefficient of resistance, and then

heating said resistor to a temperature in excess of 300° C. in an inert atmosphere followed by an oxidizing atmosphere which are sustained for time intervals and varied in accordance with desired characteristics to be obtained within close tolerances of resistance and temperature coefficient of resistance values, the heating in each atmosphere being continuously maintained for substantially greater than 100 milliseconds.

16. A method of manufacturing a thin-film network comprising at least one thin-film resistor of desired resistance value and temperature coefficient of resistance parameters with close tolerance, said method comprising the steps of:

depositing a thin-film of appropriate characteristics and in a manner of depositing to provide a thin-film resistor which is within an approximate range of desired resistance value and temperature coefficient of resistance characteristics upon a substrate to form a thin-film resistor,

aging said resistor for a period of time sufficient to stabilize the value of its resistance and of its temperature coefficient of resistance, and then

heating said resistor to a temperature in excess of 300° C. in an oxidizing atmosphere followed by an inert atmosphere which are sustained for time intervals and varied in accordance with desired characteristics to be obtained within close tolerances of resistance and temperature coefficient of resistance values, the heating in each atmosphere being continuously maintained for substantially greater than 100 milliseconds.

17. A method of modifying a thin-film resistor by adjusting the resistance and independently the temperature coefficient of resistance of the film carried by a substrate comprising the step of:

heating said resistor to a temperature in excess of 300° C. in an inert atmosphere followed by an oxidizing atmosphere for respective time durations sufficient to adjust said resistance value and independently said temperature coefficient of resistance value to predetermined values.

18. A method of modifying a thin-film resistor by adjusting the resistance and independently the temperature coefficient of resistance of the film carried by a substrate comprising the step of:

heating said resistor to a temperature in excess of 300° C. in an oxidizing atmosphere followed by an inert atmosphere for respective time durations sufficient to adjust said resistance value and independently said temperature coefficient of resistance value to predetermined values.

19. A method of modifying each of a plurality of thin-film resistors by adjusting the resistance value and independently the temperature coefficient of resistance of the film carried by a substrate comprising the step of:

sequentially heating each of said resistors individually in an inert atmosphere followed by an oxidizing atmosphere for respective time durations such as to effect modification of said resistance values and independently said temperature coefficients of resistance of the films of said resistors in accordance with predetermined desired values.

20. A method of modifying each of a plurality of thin-film resistors by adjusting the resistance value and independently the temperature coefficient of resistance of the film carried by a substrate comprising the step of:

sequentially heating each of said resistors individually in an oxidizing atmosphere followed by an inert atmosphere for respective time durations such as to effect modification of said resistance values and indepently said temperature coefficients of resistance of the films of said resistors in accordance with predetermined desired values.

References Cited

UNITED STATES PATENTS

2,994,847	8/1961	Vodar	29—620
3,108,019	10/1963	Davis	29—620 X
3,308,528	3/1967	Bullard et al.	29—620
3,056,937	10/1962	Peitikin	29—620 X
3,261,082	7/1966	Maissel.	
2,818,522	12/1957	Wheeler.	
3,324,706	6/1967	Russell.	

OTHER REFERENCES

E. R. Dean: Effect of Thermal Aging on the Electrical Resistivity of Thin Alloy Films, J. of App. Physics, vol. 35, No. 10, October 1964, pp. 2930–2933.

Ivan L. Brandt: Fabricating Thin Film Resistors, Electronics, Apr. 7, 1961, pp. 78–80.

Belser & Hicklin: Temp. Coefficients of Res. of Metallic Films in the Temp. Range 25° to 600° C., J. of App. Physics, vol. 30, No. 3, pp. 313–322, March 1959.

JOHN F. CAMPBELL, Primary Examiner

J. L. CLINE, Assistant Examiner