July 1, 1924.

1,499,843

H. A. R. PETERSON

VALVE SPRING LIFTER

Filed Sept. 25, 1922

Fig. 1.

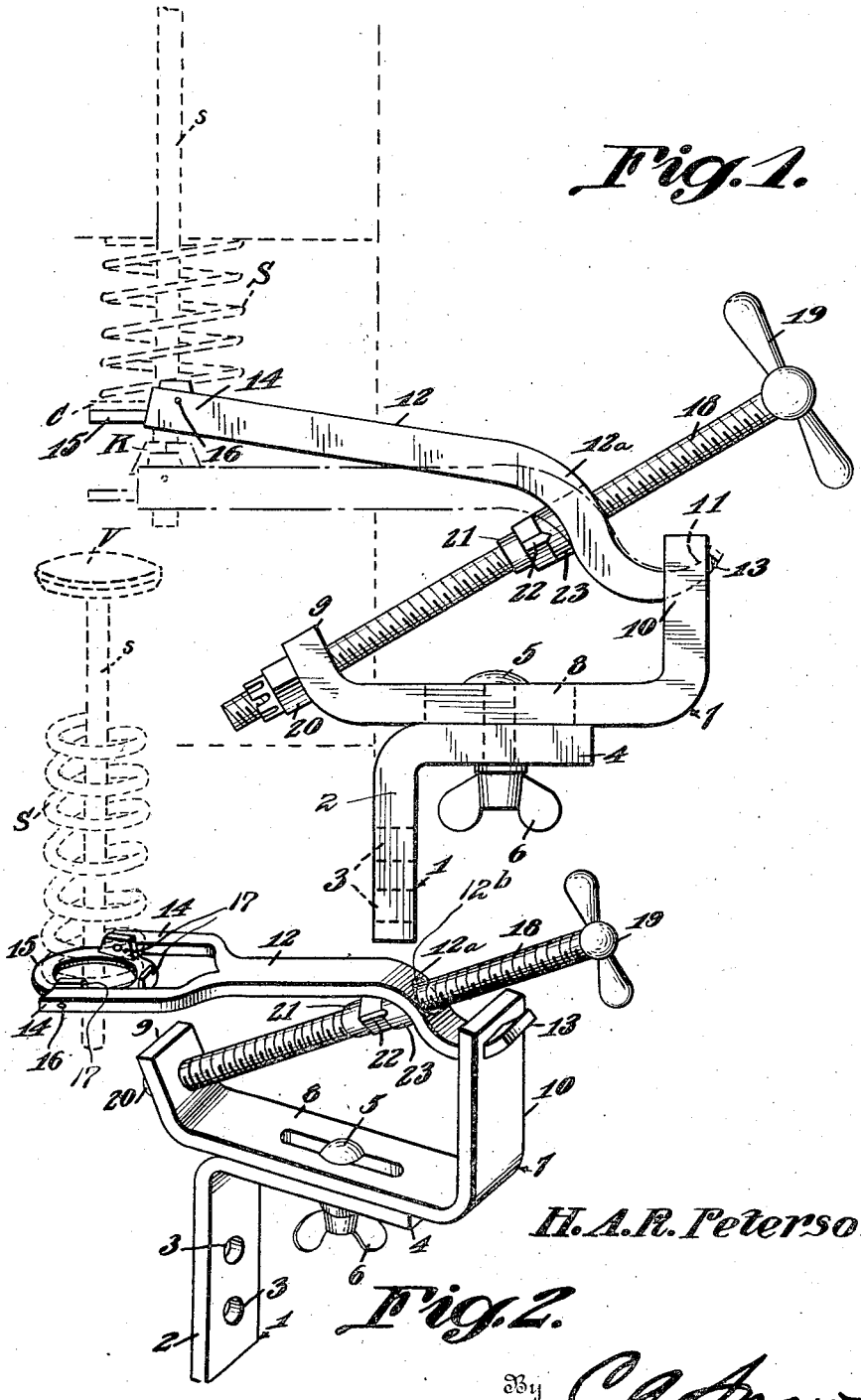

Fig. 2.

H. A. R. Peterson,
Inventor

By C. A. Snow & Co.
Attorneys

Patented July 1, 1924. 1,499,843

UNITED STATES PATENT OFFICE.

HERBERT A. R. PETERSON, OF MANKATO, MINNESOTA.

VALVE-SPRING LIFTER.

Application filed September 25, 1922. Serial No. 590,484.

To all whom it may concern:

Be it known that I, HERBERT A. R. PETERSON, a citizen of the United States, residing at Mankato, in the county of Blue Earth and State of Minnesota, have invented new and useful Valve-Spring Lifters, of which the following is a specification.

This invention relates to valve spring lifters for automobiles for compressing the valve springs to permit the holding pins or keys to be easily removed, and more particularly to valve spring lifters for use in connection with GMC trucks.

The object of the invention is to provide a lifter of this character especially designed for use in connection with models K 41, K 71 and K 101 of GMC trucks and so constructed and mounted for use that ample room is provided for the user to insert his hand beneath the valve to be removed and remove the valve lock keys without danger of the keys dropping into inaccessible places.

In GMC trucks, the valve lifters are carried in groups of four in removable brackets, and each of these assemblies can be removed as a single unit without removing the valve spring retainers and are fastened in place by eight cap screws. It takes only a few moments to remove these units by taking out the screws and the valve spring lifter constituting this invention is constructed so as to be attached to the engine block at any one of these eight places and is secured by bolting to the motor whereby the lifter is made rigid and cannot slip out of place.

The ordinary valve spring lifter employed in connection with trucks of this type is so constructed as to be used without removing the valve tappets which are needed as a perch to obtain leverage on the lifter and thus no space is provided for the insertion of the user's hand to remove and catch the valve locking keys.

With the foregoing and other objects in view which will appear as the description proceeds, the invention resides in the combination and arrangement of parts and in the details of construction hereinafter described and claimed, it being understood that changes in the precise embodiment of the invention herein disclosed may be made within the scope of what is claimed without departing from the spirit of the invention.

In the accompanying drawings:—

Figure 1 represents a side elevation of a valve lifter constructed in accordance with this invention shown applied, with the spring compressed in full lines and the parts of the lifter in the position assumed during said compression, the dotted line position showing the spring before compression with the lifter ready for use.

Fig. 2 is a perspective view of the lifter shown in position ready for use, the valve spring and valve in connection with which it is used, being shown in dotted lines.

In the embodiment illustrated, the lifter constituting this invention comprises an inverted L-shaped bracket 1, the arm 2 of which is designed to be positioned upright against the engine wall and is apertured as shown at 3 for the passage of bolts which are designed to connect this bracket through the bolt openings which are employed for connecting the valve tappet assembly, it being understood that the assembly is first removed and that the lifter is fastened first under one valve and then under another and so on.

The bracket arm 4 which extends outwardly from the engine in horizontal position when the lifter is applied is apertured for the passage of a bolt 5 equipped with a wing nut 6 which adjustably mounts on the bracket the body 7 of the lifter.

The lifter body 7 is constructed in the form of a metal bar or strip slotted longitudinally as shown at 8 for the passage of the connecting bolt 5, whereby this body may be moved toward and away from the engine in connection with which the lifter is used. The inner end 9 of the body 7 extends outwardly and upwardly at an oblique angle and is apertured for the passage of an operating screw 18 presently to be described. The other end of the body 7 has an upstanding right angularly disposed arm 10 provided near its terminal with a transversely extending slot 11 to receive the hooked end 13 of the lifter arm 12. This lifter arm 12 has an offset portion 12^a through which the operating screw 18 passes, said arm being slotted to provide for such passage as shown at 12^b.

The inner spring engaging end of the arm 12 is bifurcated and between the furcations 14 thereof is pivotally mounted an annular spring engaging member 15, the pivots 16 on which said member 15 is mounted being journaled in the furcations 14. This spring engaging member 15 is equipped with up-

standing peripherally spaced lugs 17 designed to operate as centering means for the valve spring S, the spring saddle or seat 15 fitting snugly under and around the valve spring cap C which fits over the spring locking keys K and holds them in place. It is of course understood that the valve spring S rests on the cap C whereby the valve V is retained in closed position. The keys K are made in two parts as is ordinary with the type of key used in this form of engine, and are slightly tapered, being locked in a groove in the lower end of valve stem *s* by means of the cap C.

The actuating screw 18 which controls the movement of the lifter arm or lever 12 is equipped at its outer end with a cross bar 19 to afford a hand grip for operating the screw. This screw 18 passes obliquely through the offset slotted portion 12^a of the lever 12 and through the short oblique arm 9 of the lifter body 7, being equipped outside said arm with a lock nut 20. A wing nut 21 is mounted on the screw 10 below and adjacent the lever 12 and is equipped with diametrically opposite prongs 22 which are designed to engage grooves in a member 23 carried by screw 12. These prongs 22 act as centers so that when the screw 18 is turned, they engage the grooves in the member 23 and cause the lever to raise or lower according to the direction in which the screw is turned.

When this lifter is applied, as shown in Figs. 1 and 2, the screw 18 is turned to raise the front end of the lever 12 into the full line position shown in Fig. 1, thereby compressing and raising spring S to expose the locking keys K which may be removed and caught in the hand of the user, ample room being provided for the insertion of the user's hand for this purpose.

The valve lifters of GMC trucks are carried in groups of four in removable brackets and each of these assemblies is removable as a single unit without removing the valve spring retainers and they are fastened in place by eight cap screws. These units are removed in a few minutes by taking out the cap screws and the valve spring lifter constituting this invention may be attached to the engine block at any one of these places and secured by bolting it to the motor. When so mounted it will be obvious that the ring-shaped member 15 may be slipped up on the valve stem 5 as shown in Figs. 1 and 2.

This mounting of the lifter on the motor after the removal of the valve tappets avoids all danger of the locking keys K dropping into the bottom of the crank case where they are inaccessible and to remove them requires several hours' work. Of course if any other valve keys are at hand they may be substituted for those which fall into the crank case, but oftentimes such additional keys are not provided and hence long delays occur when the truck is to be partially disassembled to reach the crank case, or other keys ordered from a distributing point.

The lifter constituting this invention may be easily operated by the ordinary truck driver by simply removing the valve tappets in the manner above described and substituting therefor this lifter.

I claim:—

1. A valve spring lifter of the class described comprising a body having an attaching bracket adjustably connected therewith and provided with means for securing it to a motor, a lifter arm fulcrumed at one end on said body, an operating screw passing obliquely through said arm and said body and connected to raise or lower the arm, and a spring engaging saddle pivotally mounted on said arm.

2. A valve spring lifter for GMC trucks comprising a body having laterally extending arms at its opposite ends, one of said arms being arranged at an oblique angle and the other at right angles, an attaching bracket carried by said body, a lever having an off-set end fulcrumed in said right angular body arm and having spring engaging means at its other end, an actuating screw passing through the offset portion of said lever arm and through the obliquely disposed body arm a lock nut for said screw, and cooperating means carried by said screw and lever arm whereby the turning of the screw will operate to raise or lower the arm.

In testimony that I claim the foregoing as my own, I have hereto affixed my signature in the presence of two witnesses.

HERBERT A. R. PETERSON.

Witnesses:
MARGUERITE KEOUGH,
LOUIS SCHULT.