United States Patent [19]

Rowlands

[11] **3,888,383**

[45] **June 10, 1975**

[54] **CONTAINER HAVING A TAMPERPROOF CLOSURE**

[75] Inventor: **Martyn Rowlands**, Epping, England

[73] Assignee: **Bowater Packaging Limited**, London, England

[22] Filed: **Aug. 17, 1973**

[21] Appl. No.: **389,313**

[30] **Foreign Application Priority Data**

May 7, 1973 United Kingdom 21582/73

[52] **U.S. Cl.** **220/265**; 220/293; 215/7; 215/252

[51] **Int. Cl.** **B65d 41/02**; B65d 41/32

[58] **Field of Search** ..... 220/40 R, 27, 265, 266, 220/293; 215/252, 253, 254, 7

[56] **References Cited**

UNITED STATES PATENTS

1,980,995	11/1934	Holloway	220/27
2,124,638	7/1938	Sheldon et al.	215/252
2,162,713	6/1939	Hamberger et al.	215/252
2,423,582	7/1947	Coleman	215/252
2,950,832	8/1960	Brüne	215/252
3,028,992	4/1962	Bucher et al.	220/27
3,438,535	4/1969	Tisserand et al.	220/27
3,455,478	7/1969	Fields et al.	215/252
3,463,341	8/1969	Fields	220/27
3,650,428	3/1972	Miller	215/252
3,737,064	6/1973	Patel et al.	215/252

Primary Examiner—George T. Hall

Attorney, Agent, or Firm—Brisebois & Kruger

[57] **ABSTRACT**

A container and closure cap assembly comprising a pilfer - proof device involving the use of co-operable members provided on the cap and container body. The members may be arranged so that when the cap is turned for closure they lock the cap in position, so that when the cap is turned in the opposite sense one of them is removed thereby indicating that the container has been opened. The cap and container are provided with at least one inwardly and at least one out-wardly extending projection respectively which engage, by relative turning movement between cap and container to secure the cap on the container; on of the projections being used as one of the co-operable members.

10 Claims, 7 Drawing Figures

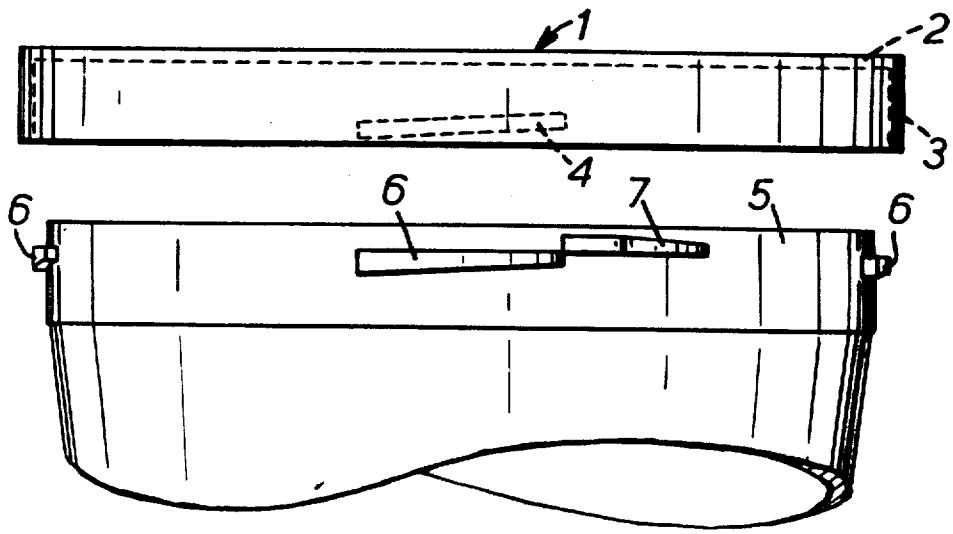

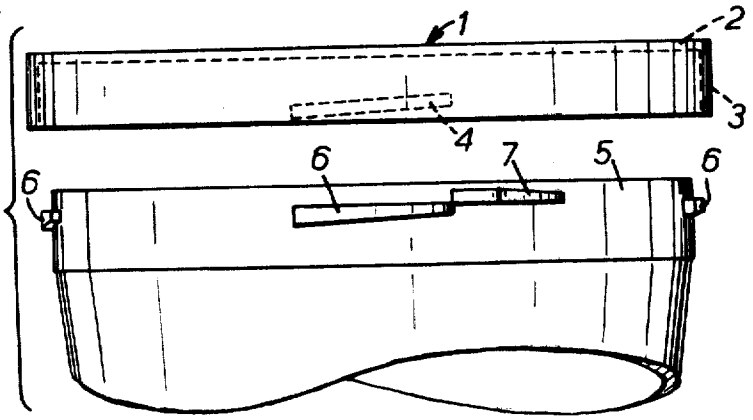

FIG. 1.

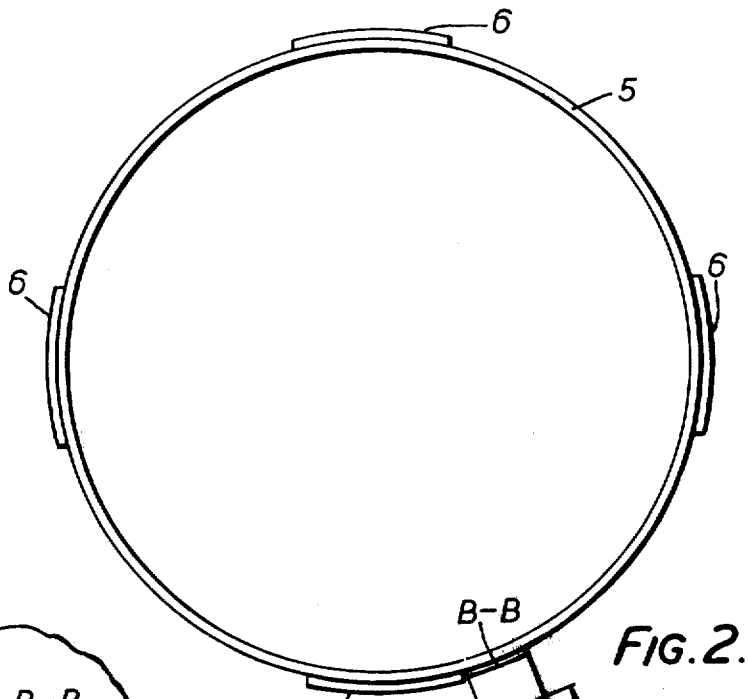

FIG. 2.

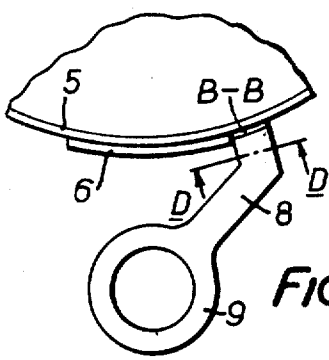

FIG. 6.



FIG. 3.

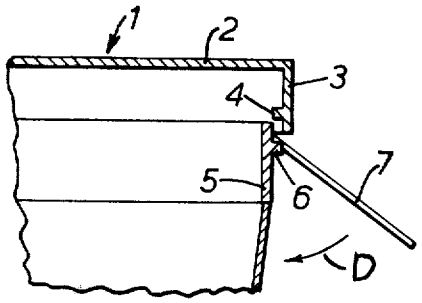

FIG. 4.

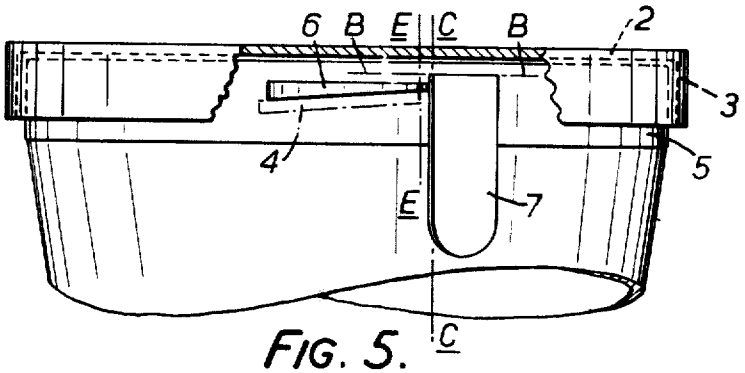

FIG. 5.

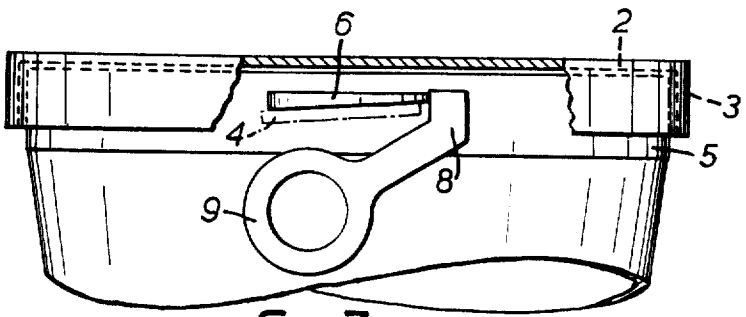

FIG. 7.

CONTAINERS HAVING A TAMPERPROOF CLOSURE

This invention relates to a container and closure cap assembly and especially to a pilfer proof device therefor.

The invention provides an assembly comprising two elements, namely, a container and a closure cap for the container, wherein the cap and container are provided with at least one inwardly and at least one outwardly extending projection respectively which are engageable, by a relative turning movement in one sense between the cap and the container, to secure the cap on the container, and the cap and the container are each provided with a member, the two members being so arranged and constructed that, during the said relative turning movement, one member engages and rides across the other member and then disengages the other member, and that during relative turning movement in the opposite sense, one member so engages the other that continued relative turning movement in the said opposite sense in order to disengage the cap from the container is prevented unless one of the members becomes detached, in which assembly one of the two members is constituted by the projection or one of the projections on one of the elements.

This consturction not only provides a very simple mechanism for securely locking the cap on the container but also provides the container with pilfer proof characteristics. Both members may be detached by re-engagement but it is only essential for one of them to be removed in order to indicate that the container has been opened.

Preferably, each projection forms a part turn of a screw thread.

Advantageously, the member provided on the other of the elements is arranged adjacent to the projection or one of the projections on the said other element so that immediately after disengagement of the members during said turning movement in the said one sense, the cap is brought into its fully closed position. This ensures that the cap need only be turned very slightly to effect re-engagement of the members and subsequent detachment of one of them.

To ensure ease of removal in normal use it is of advantage if one member is in the form of a tab one end of which is frangibly connected to one of the elements.

To avoid tampering, it is also of advantage if the frangible connection is arranged to be concealed by the cap when the cap is engaged on the container.

It is also of advantage if the tab is arranged so that when the cap is engaged on the container it lies between, and in face-to-face relationship with, the inside of the cap and the outside of the container and extends beyond the free edge of the cap. This allows easy removal of the tab in normal use.

It is of advantage if the tab is provided with a gripping ring to facilitate removal of the tab in normal operation.

It is also of advantage if at least those parts of the cap and container on which the two members are provided are formed from injection moulded plastics material and the co-operable members themselves are integrally moulded therewith.

It is of advantage if at least part of the member on one of the elements is of generally wedge-like configuration an oblique or inclined surface of the member

being arranged to be engaged and ridden over by the member on the other element during the relative turning movement and the relatively thick end of the first-mentioned member being arranged to be engaged by the member on the other element during the relative turning movement in the opposite sense.

Open-ended container and closure cap assemblies constructed in accordance with the invention will now be described, by way of example only, with reference to the accompanying drawings of which:

FIG. 1 is an exploded side elevation of a container and cap assembly

FIG. 2 is a plan view of the container

FIG. 3 is a section on the line A—A in FIG. 2

FIG. 4 is a vertical section through the cap and container immediately prior to closure

FIG. 5 is a side elevation of the cap and container in the closed position with parts of the cap removed

FIG. 6 is a plan view of part of a modified container and

FIG. 7 is a side elevation of a cap and the container shown in FIG. 6 in the closed position with parts of the cap removed

Referring to FIGS. 1 to 5 of the drawings the cap indicated generally at 1 comprises a generally circular top portion 2 and a cylindrical skirt portion 3. The inner surface of the latter is formed with four beads or flanges 4 each of which defines a part turn of a screw thread. The open end of the container 5 is generally cylindrical in form and is formed with four beads 6 each of which engages with a bead on the cap to secure the cap to the container (see FIG. 5).

Arranged adjacent to one of the beads 6 on the container, and upstream thereof relative to the direction in which the cap is turned for closure, is a locking tab 7. Part of the tab is of wedge-like form (see FIG. 3), and one end of it is frangibly hinged to the container along a hinge line 'B—B'.

At least the skirt portion of the cap and the open end of the container is constituted by injection moulded plastics material, the beads 4 and 6 and the locking tab 7 being moulded integrally therewith. In order to simplify moulding of the container the tab is moulded so that it projects at 90° to the outer wall of the container.

To fit the cap on the container the cap is brought into position on the container so that each bead 4 on the cap lies between a pair of adjacent beads 6 on the container. As this is done the locking tab is folded, in the direction of arrow D, (see FIG. 4) about the hinge line B—B so that it lies between the outer wall of the container and the inner wall of the skirt portion 3 of the cap. The cap is then turned so that each bead 4 on the cap engages beneath a corresponding bead 6 on the container (see FIG. 5). During this turning movement one of the beads 4 on the cap rides over the outwardly facing surface of the locking tab 7 and takes up a position on the downstream side of it relative to the direction of turning (see FIG. 5). Because part of the tab is of wedge like form, with its 'thick' end adjacent to the bead 6, it acts as a ramp for the bead 4 as the cap is turned for closure. Depending on the relative strength and flexibility of the material forming the cap and container top the bead 4 will be displaced outwardly or the tab will be displaced inwardly or, perhaps, there will be a combination of these movements.

It will be evident that once the cap has been brought into its closed position on the container as shown in

FIG. 5 the container cannot be re-opened without the bead 4 engaging the downstream or thick end of the tab 7. Correct opening of the container is achieved by firmly pulling the tab 7 so that it tears along the hinge line B—B and is removed from the container. This frees the cap and allows it to be opened by turning until the beads 4 and 6 disengage. If an attempt is made to open the container without first removing the tab 7 then the following happens. The 'upstream' end E of the bead 4 will strike the downstream of thick edge of the tab 7 somewhere along the plane C—C. Continued rotation of the cap will result in the bead tearing the tab along the hinge line B—B and removing it from the container. The tab 7 therefore acts as a pilfer-proof device for the container.

FIGS. 6 and 7 illustrate a modification of the container and cap assembly shown in FIGS. 1 to 5 corresponding parts of the two assemblies have been given corresponding reference characters. In this case the tab 7 of the latter construction has been replaced by a pull-ring tab 8 which provides easier removal of the tab from the container in normal use. The tab 8 is hinged to the container about a hinge line B—B in a similar way to the FIGS. 1 to 5 construction and in particular the tab 8 is moulded so that it projects at 90°, to the outer wall of the container. The tab 8 is of cranked form and its free end is provided with a ring 9. The part of the tab 8 adjacent to the container is of generally wedge shaped form and a section on the line 'D—D' indicated in FIG. 6 would have the appearance indicated in FIG. 3. In normal use a finger can be inserted through the ring 9 to pull the tab 8 thereby tearing it free from the container along the hinge line B—B. If an attempt is made to open the container without first removing the tab 8 then the sequence of events is the same as that described for FIGS. 1 to 5 construction. Thus the bead 4 will strike the thick edge of the tab 8 along the plane C—C and continued rotation will result in the tab being torn from the container along line B—B.

I claim:

1. An assembly comprising two elements, namely, a container and a closure cap for the container, wherein the cap and container are provided with at least one inwardly and at least one outwardly extending projection respectively which are engageable, by a relative turning movement in one sense between the cap and the container, to secure the cap on the container, and the cap and the container are each provided with a member, the two members being so arranged and constructed that, during the said relative turning movement, one member engages and rides across the other member and then disengages the other member, and that during relative turning movement in the opposite sense, one member so engages the other that continued relative turning movement in the said opposite sense in order to disengage the cap from the container is prevented unless one of the members becomes detached, in which assembly one of the two members is constituted by the projection or one of the projections on one of the elements.

2. An assembly as claimed in claim 1 in which each projection forms a part turn of a screw thread.

3. An assembly as claimed in claim 1 in which the member provided on the other of the elements is arranged adjacent to the projection or one of the projections on the said other element so that immediately after disengagement of the members, during said turning movement in the said one sense, the cap is brought into its fully closed position.

4. An assembly as claimed in claim 1 in which one member is in the form of a tab one end of which is frangibly connected to one of the elements.

5. An assembly as claimed in claim 4 in which the frangible connection is concealed by the cap when the cap is engaged on the container.

6. An assembly as claimed in claim 5 in which the tab is arranged so that when the cap is engaged on the container it lies between and in face-to-face relationship with the inside of the cap and the outside of the container and extends below the free edge of the cap.

7. An assembly as claimed in claim 1 in which at least part of the member on one of the elements is of generally wedge-like configuration an oblique or inclined surface of the member being arranged to be engaged and ridden over by the member on the other element during the relative turning movement and the relatively thick end of the first-mentioned member being arranged to be engaged by the member on the other element during the relative turning movement in the opposite sense.

8. An assembly as claimed in claim 4 in which the tab is provided with a gripping ring to facilitate removal of the tab in normal operation.

9. An assembly claimed in claim 1 in which at least those parts of the cap and container on which the members are provided are formed from injection moulded plastics material and the members themselves are integrally moulded therewith.

10. An assembly comprising two elements, namely, a container and a closure cap for the container, wherein the cap and container are provided with a plurality of inwardly and a plurality of outwardly extending projections respectively, each of the projections on each of the elements forming a part turn of a respective screw thread, the projections being engageable, by a relative turning movement in one sense between the cap and the container, to secure the cap on the container, and the container is provided with a member which is arranged so that during the said relative turning movement one of the projections on the cap engages and rides across, and then disengages, the said member, and so that during relative turning movement in the opposite sense, the said one projection so engages the said member that continued relative turning movement in the said opposite sense in order to release the cap from the container is prevented unless the said member is detached.

* * * * *