US00D412397S

United States Patent [19]

Liu

[11] Patent Number: Des. 412,397

[45] Date of Patent: ** Aug. 3, 1999

[54] **PACKING BOX**

[76] Inventor: **Yung-Yuan Liu**, No. 9, Lane 1397, Kuang Hsing Road, Taiping City, Taichung Hsien, Taiwan

[**] Term: **14 Years**

[21] Appl. No.: **29/092,381**

[22] Filed: **Aug. 18, 1998**

[51] **LOC (6) Cl.** **03-01**

[52] **U.S. Cl.** **D3/282**; D3/276

[58] **Field of Search** D3/273, 274, 276, D3/281, 282, 294, 905; 206/349, 372, 373; 190/110, 111, 112, 113

[56] **References Cited**

U.S. PATENT DOCUMENTS

D. 314,669	2/1991	Kunimune	D3/282
D. 321,985	12/1991	Ward	D3/282
D. 328,189	7/1992	Hillinger	D3/282
D. 351,504	10/1994	Tarozzi	D3/273
D. 351,727	10/1994	Tarozzi	D3/282
D. 357,117	4/1995	Huang	D3/282
D. 358,257	5/1995	Sidabras et al.	D3/282
D. 390,358	2/1998	Calmeise	D3/282
D. 399,652	10/1998	Fang	D3/282

Primary Examiner—Philip S. Hyder

Attorney, Agent, or Firm—Rosenberg, Klein & Bilker

[57] **CLAIM**

The ornamental design for packing box, as shown and described.

DESCRIPTION

FIG. **1** is a front view of a packing box showing my present design;

FIG. **2** is a rear view thereof;

FIG. **3** is a top plan view thereof;

FIG. **4** is a bottom plan view thereof;

FIG. **5** is a left view thereof;

FIG. **6** is a right view thereof;

FIG. **7** is a perspective view thereof;

FIG. **8** is a front view of the open status thereof;

FIG. **9** is a rear view of the open status thereof;

FIG. **10** is a top plan view of the open status thereof;

FIG. **11** is a bottom plan view of the open status thereof;

FIG. **12** is a left view of the open status thereof; and,

FIG. **13** is a right view of the open status.

1 Claim, 8 Drawing Sheets

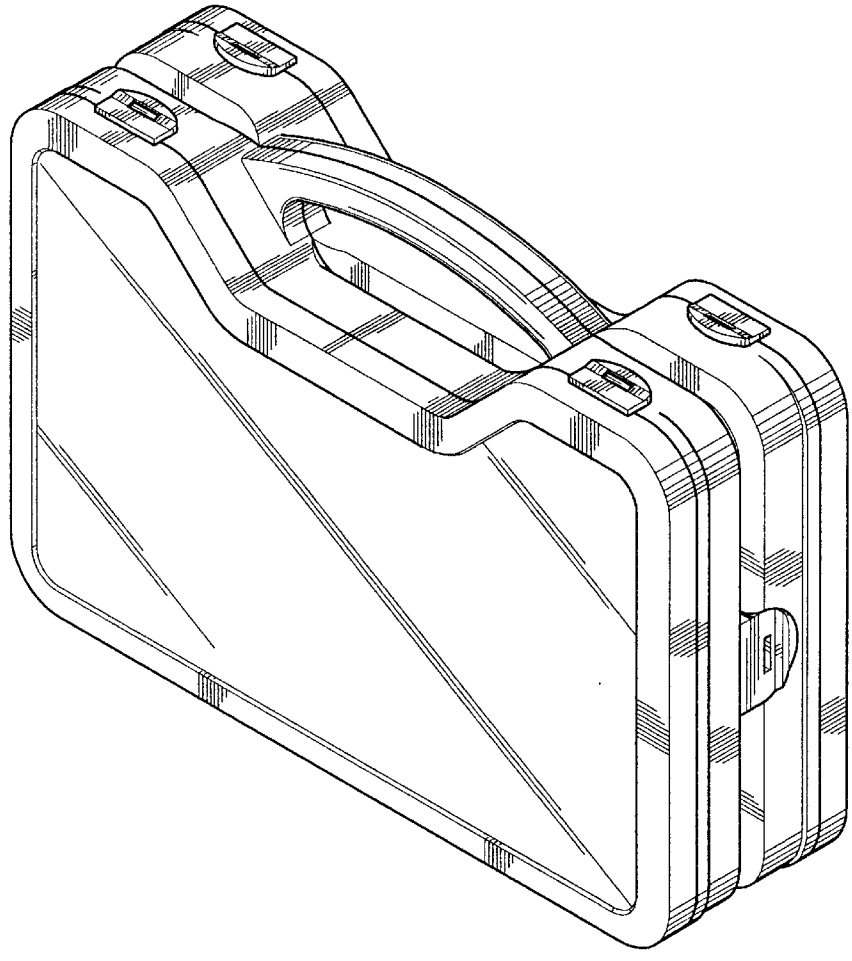

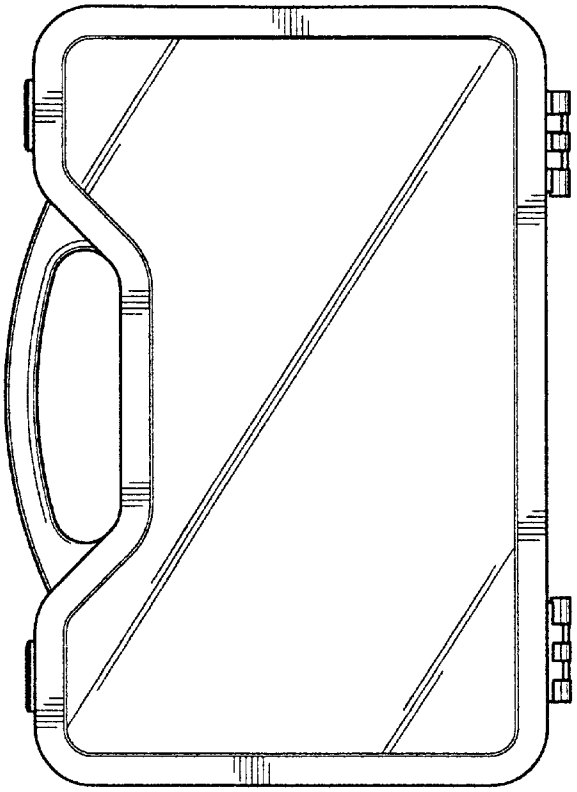

Fig. 2

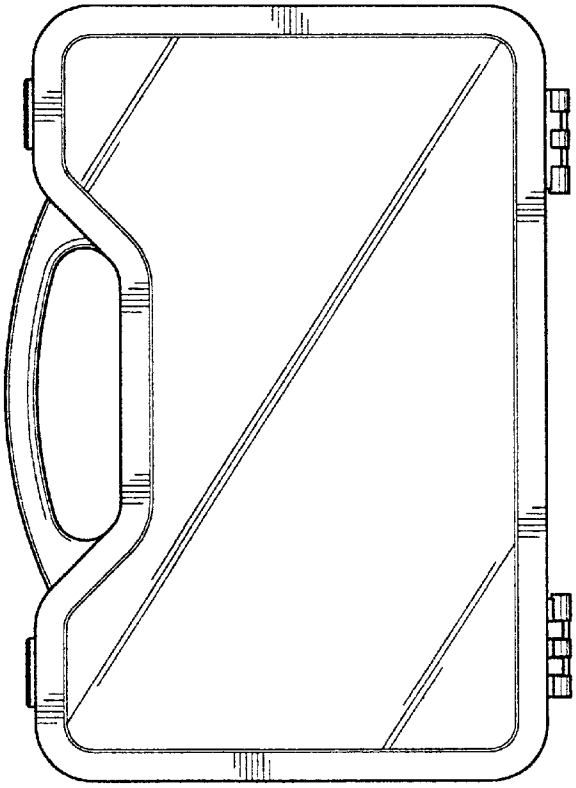

Fig. 1

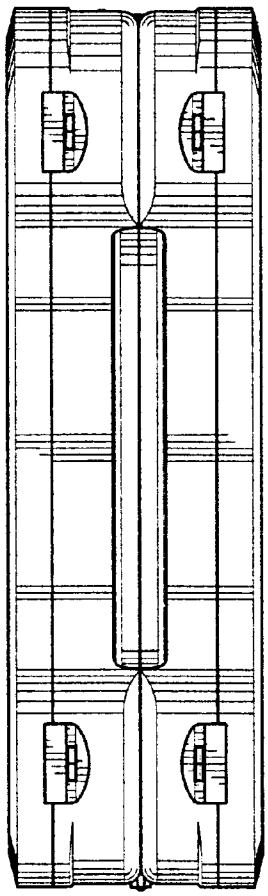

Fig. 3

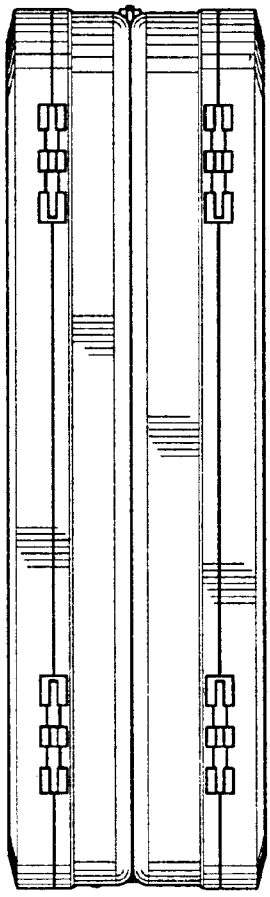

Fig. 4

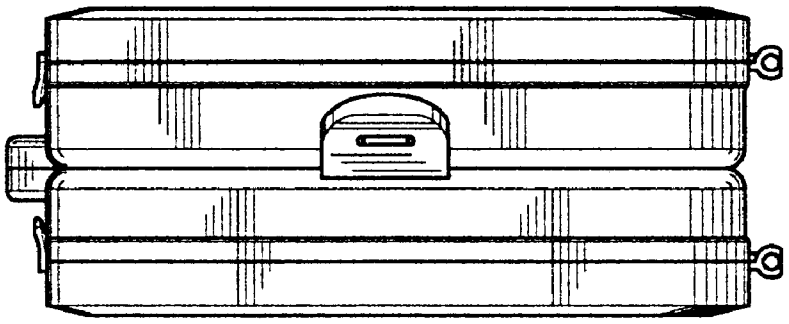

Fig. 6

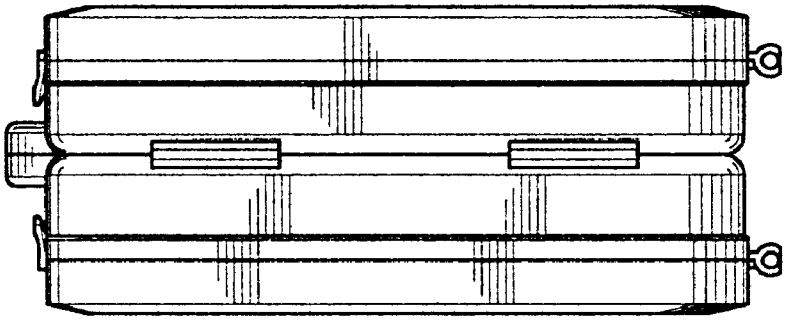

Fig. 5

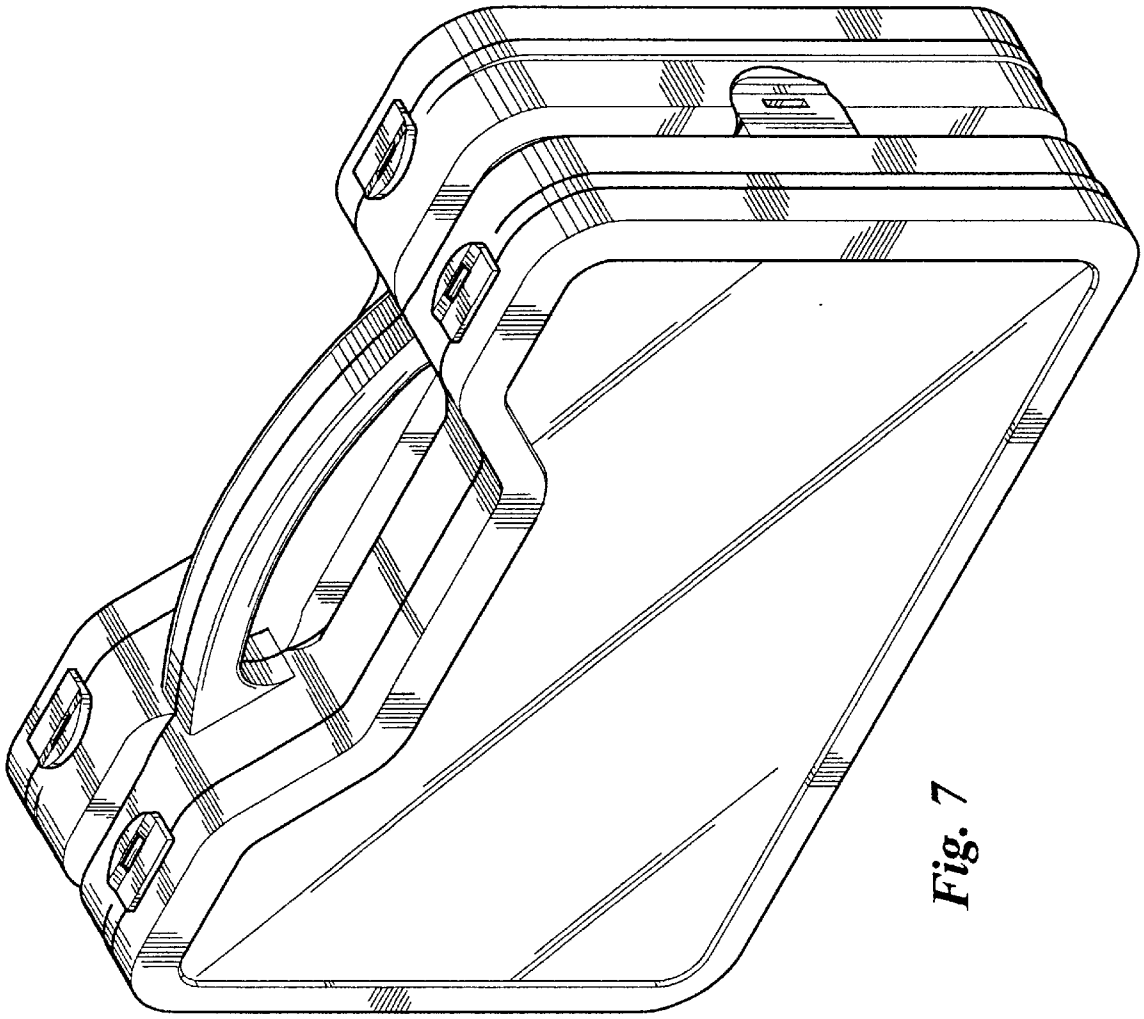

Fig. 7

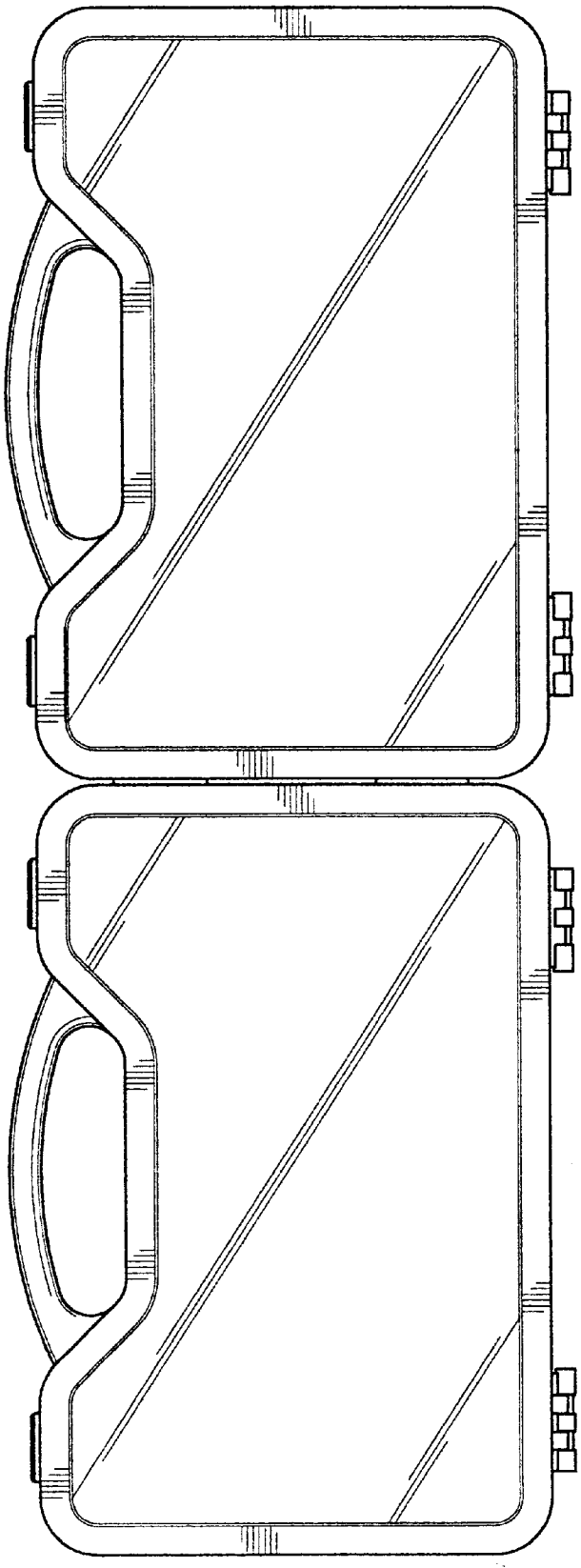

Fig. 8

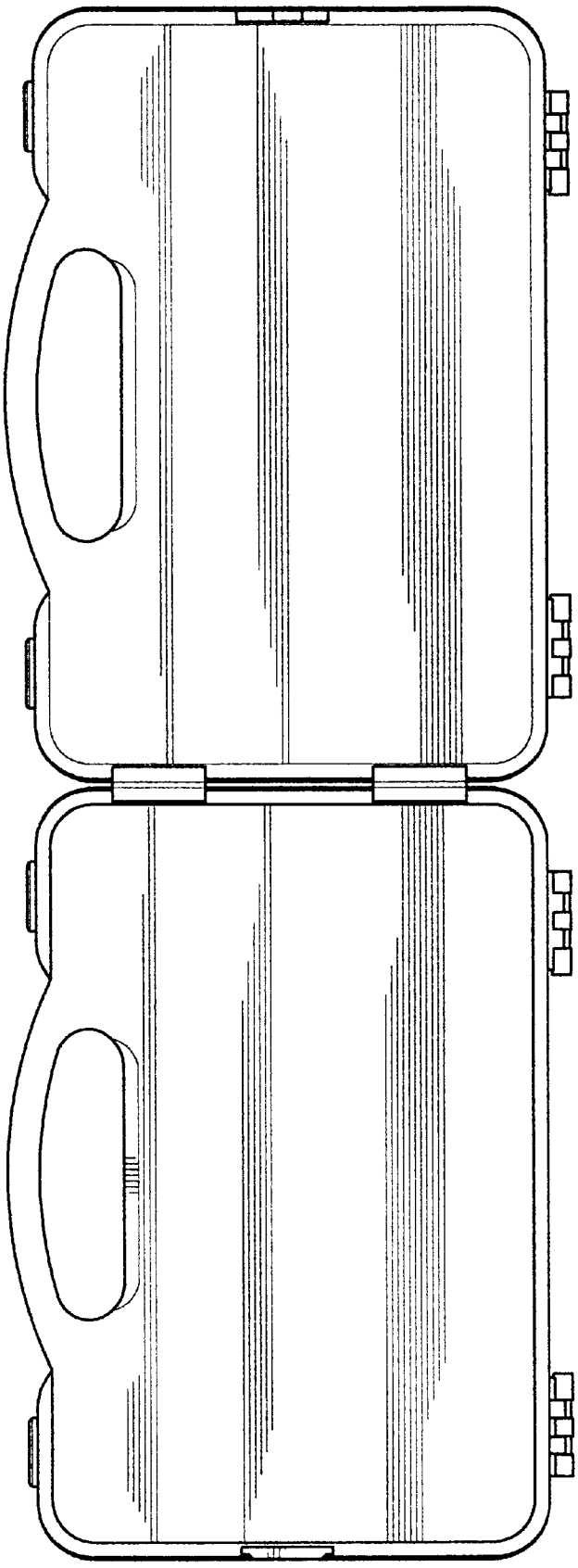

Fig. 9

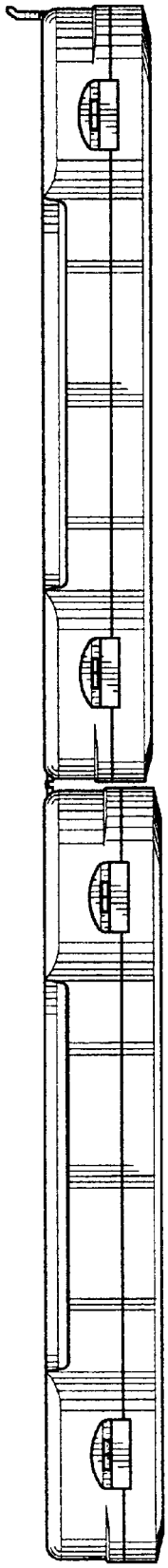

Fig. 10

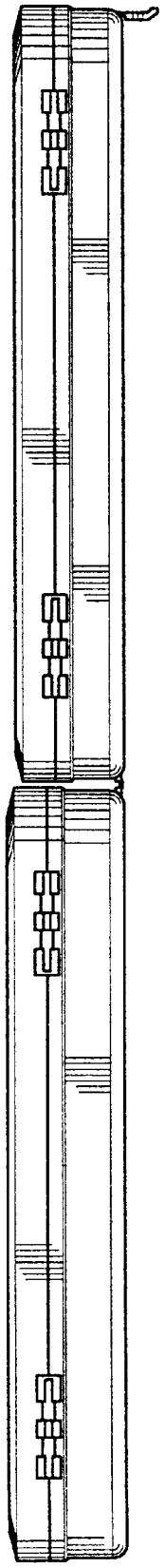

Fig. 11

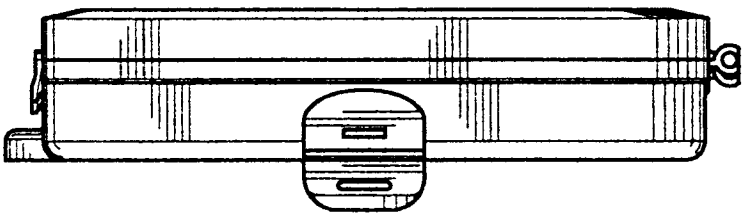

Fig. 13

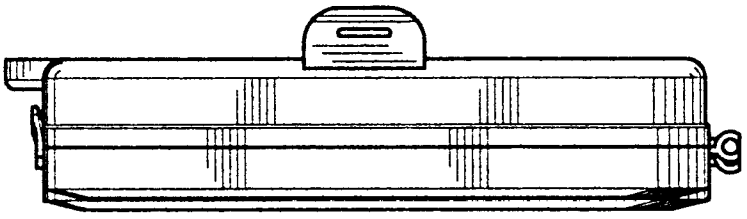

Fig. 12