April 2, 1940. C. J. FITCH 2,195,856

SIGNALING SYSTEM

Original Filed Dec. 7, 1934 3 Sheets-Sheet 1

FIG. 2.

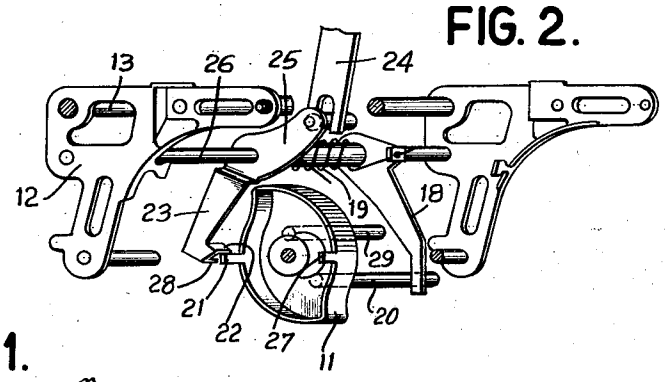

FIG. 1.

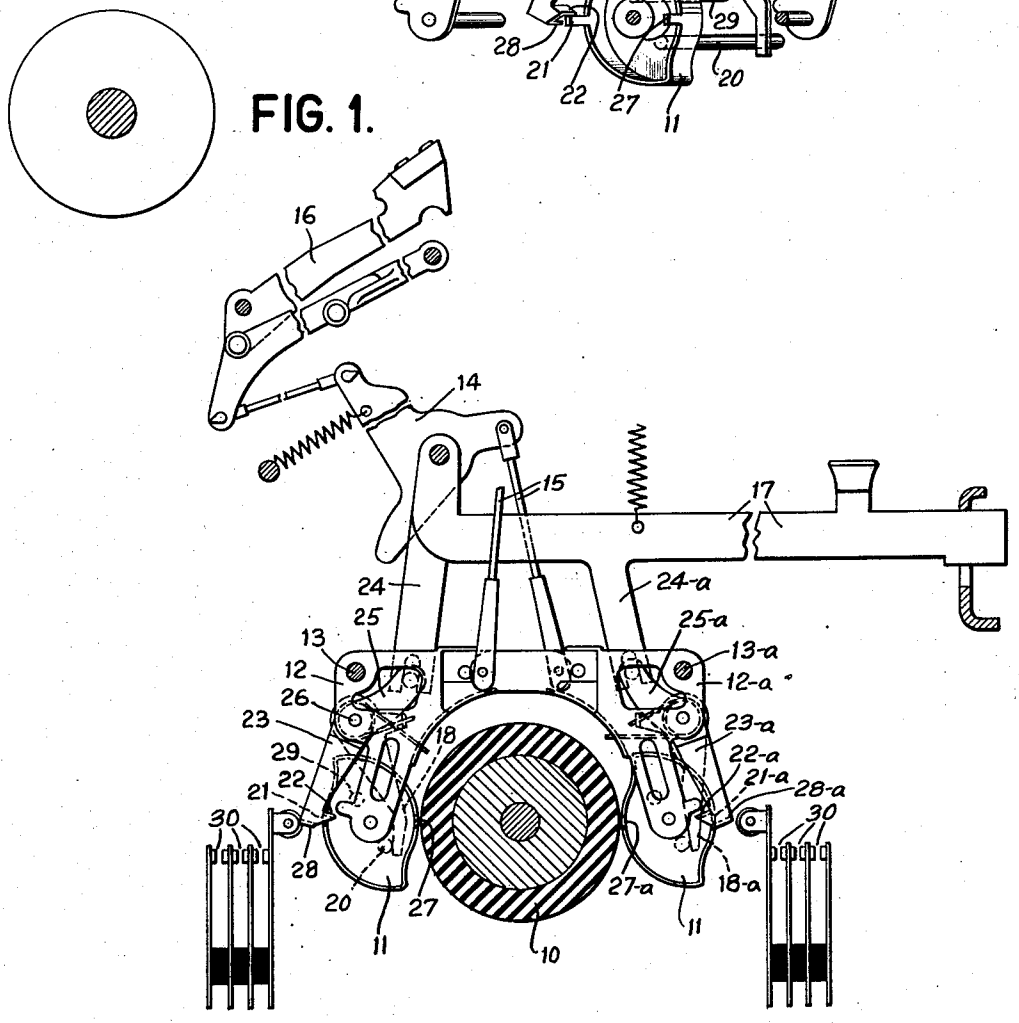

INVENTOR
Clyde J. Fitch
BY
ATTORNEY

April 2, 1940. C. J. FITCH 2,195,856

SIGNALING SYSTEM

Original Filed Dec. 7, 1934 3 Sheets-Sheet 2

FIG. 3.

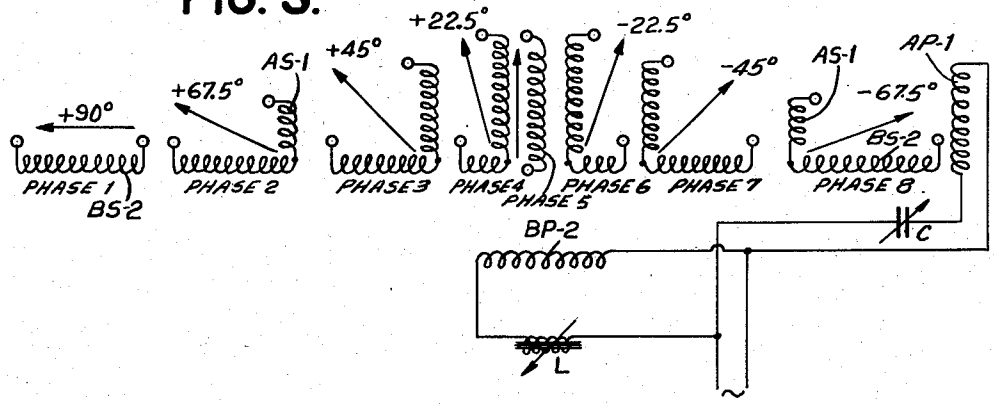

FIG. 4.

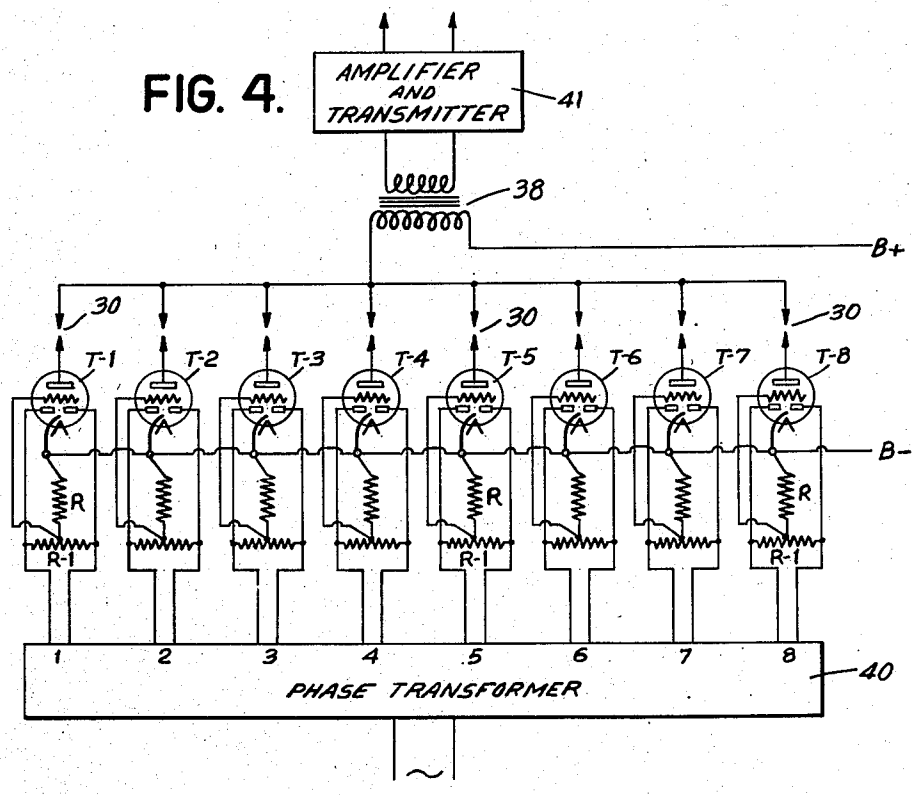

INVENTOR
Clyde J. Fitch
BY
W. M. Wilson
ATTORNEY

April 2, 1940. C. J. FITCH 2,195,856

SIGNALING SYSTEM

Original Filed Dec. 7, 1934 3 Sheets-Sheet 3

FIG. 5.

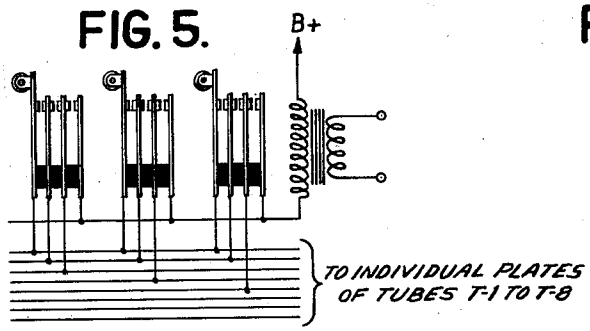

FIG. 6.

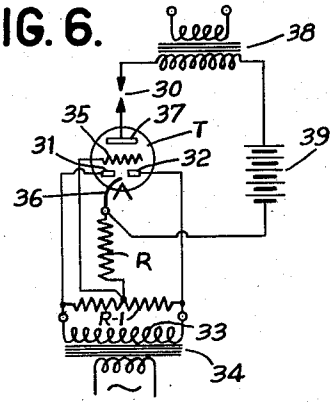

FIG. 7.

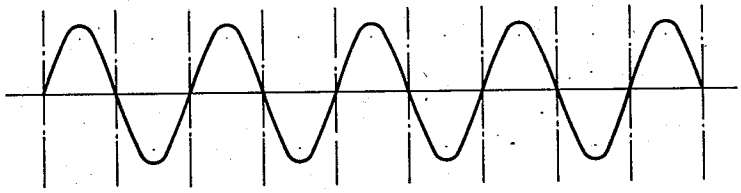

FIG. 7A.

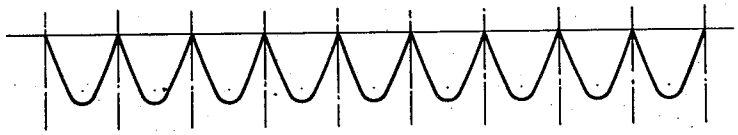

FIG. 7-B.



FIG. 8.

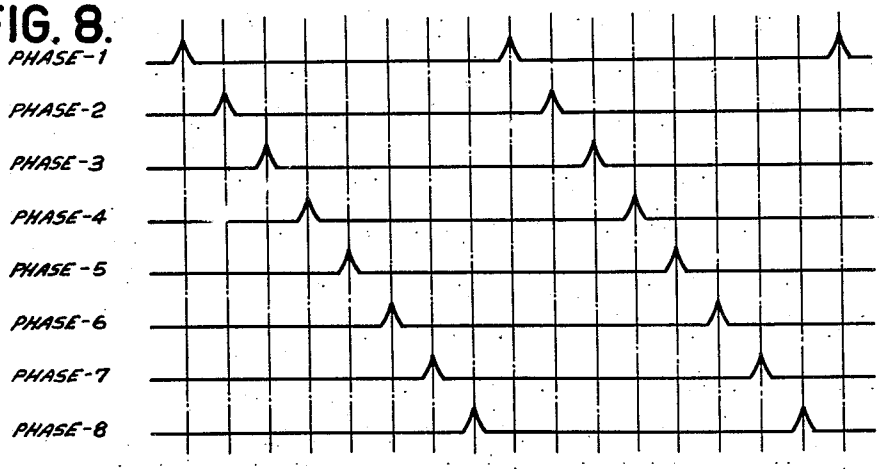

FIG. 9.

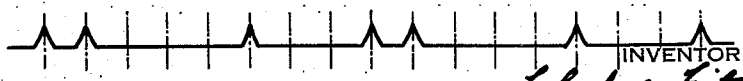

INVENTOR

Clyde J. Fitch

BY

ATTORNEY

Patented Apr. 2, 1940 2,195,856

UNITED STATES PATENT OFFICE

2,195,856

SIGNALING SYSTEM

Clyde J. Fitch, Endicott, N. Y., assignor to International Business Machines Corporation, New York, N. Y., a corporation of New York

Original application December 7, 1934, Serial No. 756,443, now Patent No. 2,153,178, dated April 4, 1939. Divided and this application December 21, 1937, Serial No. 180,969

7 Claims. (Cl. 178—67)

This invention relates to signaling systems and more particularly to an electronic impulse generator for use in such systems, and is a division of the co-pending application Serial No. 756,443, filed December 7, 1934 now Patent No. 2,153,178, granted April 4, 1939.

An object of the present invention is the provision of a method of and means for generating signal impulses comprising transforming a source of periodically varying current into a plurality of phase displaced currents and converting the phase displaced currents into short signal impulses.

Another object of the present invention is the provision of a method of generating signal impulses which comprises impressing phase displaced energy upon a plurality of thermionic discharge devices, operating said devices selectively, independently and in a definite sequence with respect to each other thereby generating a plurality of phase displaced signal impulses.

Another object is to provide static means to transform the periodically varying current into a plurality of accurately spaced and timed phase displaced impulses which are selected and transmitted in accordance with any desired arrangement.

Another object is to provide means such as a plurality of circuits including thermionic means which are conditioned periodically in a definite sequence with respect to each other and connected to an output circuit to initiate timed impulses, either in combination or singly, by the independent operation of the circuits.

Further objects of the instant invention reside in any novel feature of construction or operation or novel combination of parts present in the embodiment of the invention described and shown in the accompanying drawings whether within or without the scope of the appended claims and irrespective of other specific statements as to the scope of the invention contained herein.

In the drawings:

Fig. 1 is a sectional view of one type of standard translating mechanism.

Fig. 2 is an exploded view of certain control elements of the translating mechanism, the structural features of which are exaggerated to show clearly the normal operating positions thereof.

Fig. 3 shows diagrammatically and vectorially one arrangement of the transformer windings as embodied in the present invention.

Fig. 4 shows the circuit diagram of the phase displaced impulse generator.

Fig. 5 shows one method of controlling the initiation of combinational code pulses.

Fig. 6 shows the circuit connections of an individual electric discharge device as embodied in the present invention.

Figs. 7 to 7B show the wave shape forms impressed on various sections of the circuits shown.

Fig. 8 shows the developed phase displaced impulses initiated.

Fig. 9 shows graphically a combination of impulses representing a desired characterization.

The said copending application shows how the present invention may be used in one type of printing telegraph system as an impulse generator. However, it is to be understood that the application of the present invention is not limited to printing telegraph systems but is applicable to any system utilizing timed control impulses either in combination or singly.

A description will be now given of one method of operating control contacts in various combinations to control the initiation of the control signals applicable in a printing telegraph system.

For illustrative purposes, this invention is shown as embodying a well known type of recording unit, which may be similar in construction to the Electromatic typewriter, shown and described in detail in U. S. Patent No. 1,777,055, and hence requires only the following brief description.

Referring to the drawings and particularly to Fig. 1, well known means are provided for actuating the type bars 16, comprising a constantly rotating roller 10, cooperating with a series of individual power units each comprising a cam 11, the engagement of the cams with the roller being controlled selectively by the character key bars 17.

Any suitable means may be provided to rotate the power roller, in the direction indicated by the arrow, which is adapted to cooperate with two rows of cam units arranged in the front and rear of the roller. The cam 11 may be provided to be pivoted on one arm of a bell crank lever 12 which is pivoted in the frame of the recording unit, as indicated generally by reference character 13, the other arm of the said bell crank lever is operatively connected with an arm of bell crank lever 14 by means of link 15. Another arm of the said lever 14 is connected to the type bars 16 in a well known manner, so as to effect operation of the type bars or any other suitable means connected to the bell crank levers upon selective operation of the controlling key bars 17.

The pivoted bell crank lever 12 is operated by the associated cam 11 whenever the latter engages the driven roller; the engagement of the cam with the roller is controlled by means of the associated control key bar 17 in a manner which will now be briefly described.

Referring now to Fig. 2, the cams occupy normally the positions as shown in this figure, which represents one of the rear bank of the units. In this position the impeller-arm 18 is urged, by the associated coil spring 19, against one of the impeller-lugs 20, which at the time is in the lower position, and tends to turn the cam 11 in a clockwise direction. This is prevented, however, by the engagement of one of the detents 21 on the cam, with the upper stop lug 22 on the stop lever 23. If, however, the corresponding key bar is operated, the bifurcated lower end (Fig. 1) of extension arm 24 associated with one of the said key bars 17 engages an arm 25 at the upper end of the stop lever 23 which is provided with an offset projection at its end which extends laterally through an opening in the bell crank lever 12. The arm 25 of the stop lever 23 is then swung rearwardly or to the left as viewed in Fig. 1 about the pivot 26 and its lower end forwardly or to the right as viewed in this figure, thus releasing the cam, which then turns under the influence of the spring urged impeller-arm 18. In doing so the upper serrated lobe of the cam is brought into engagement with the power roller, which turns in a counterclockwise direction and therefore causes a continued rolling movement of the cam until the high point has been reached and passed. This causes the whole cam unit to swing around the pivot 13 so as to pull down the corresponding link and actuate one of the type bars or any other mechanism with which the cam unit may be connected.

After the high point of the cam is passed the cam loses contact with the roller, but the said impeller-arm 18 tends to continue the rotation thereof by engaging the second impeller-lug 29 of cam 11 until the second detent 27 engages one of the stop lugs. Since the half rotation of the cam consumes only a small fraction of a second, it is difficult to release the key bar within this short interval, so that it is the lower lug 28 which is first engaged, but upon the release of the key bar and the return of the stop lever 23 to normal position, this lug 28 disengages the detent, whereupon the impeller-arm rotates the cam slightly, and the said detent then engages the upper stop lug 22.

It is obvious then that depression of a key bar releases the revolubly mounted cam to engage and be actuated by the power roller in turn operating the associated bell crank lever and its attached links to cause the associated mechanism such as the type bars and other operating mechanisms, to be operated. It is to be understood that an individual cam unit is provided for each type bar or other functional mechanisms associated therewith.

The action of the cam mechanism has been described with respect to one of the rear bank of cam units; in the case of those of the forward bank the operation is analogous, but the directions of movement, and the order of operation of the stop lugs, is reversed. For example, if the bifurcated arm 24—*a* is positioned to engage the arm 25—*a* at the upper end of stop lever 23—*a* by virtue of operation of the associated key bar, the said arm is positioned rearwardly or to the left as viewed in Fig. 1, and the lower end of the stop lever 23—*a* is moved forwardly, that is, to the right as viewed in the said figure. This said operation is effective to release the cam, by virtue of positioning the lower stop lug 28—*a* out of the path of detent 21—*a*, thus permitting the spring-urged impeller arm 18—*a* to rotate the cam slightly in a clockwise direction to effect engagement of the lower lobe of cam 11 and power roller. Upon completion of a half revolution of the cam 11, the second detent 27—*a* engages first the upper stop lug 22—*a* while the stop lever 23—*a* is in an operated position, but upon release of the associated key bar and the return of the said stop lever to normal position, this lug 22—*a* disengages the said detent and the impeller-arm rotates the cam slightly so that the said detent then engages the lower stop lug 28—*a*, as shown in the figure. In this manner the bell crank lever 12—*a* is rotated about the pivot 13—*a* to operate the associated type bar or any other mechanism associated therewith. For further structural details of the cam units, reference should be made to the above mentioned patent.

The said cams upon operation are adapted to operate a group of contacts 30, suitably disposed near each cam, so as to condition the connected circuits (Figs. 4 and 5) for purposes which will be understood as the description progresses.

Referring now to Fig. 6, a single signal generating circuit will be described first, and in the disclosed form is shown to comprise an electric discharge device T comprising the combination of a full wave rectifier and the triode in one envelope and is a type known in the art as a duplex diode triode type. The diode plates 31 and 32 are joined to the terminals of a resistance R—1 which is connected in shunt relationship with the secondary winding 33 of transformer 34. The center tap of the said resistance is connected to the control grid element 35 of the tube and is also connected to a second resistance R inserted between the said center tap and the cathode element 36. The triode plate is connected to a set of control elements such as contacts 30 which are included in a circuit comprising the primary winding of transformer 38, battery 39 and connected to the said cathode element.

It is evident from the description of the circuit connections just set forth that normally the grid element of the tube is at zero bias, due to the fact that no current is passing through the resistance R; therefore, upon closure of contacts 30 current flow will be established in the triode plate circuit as follows: from the positive terminal of battery 39 through the primary winding of the transformer 38, contacts 30, anode and cathode elements of the tube to the negative terminal of the said battery. However, the condition just described exists in the said circuit for only a comparatively short time, because the bias on the grid 35 is not a constant factor but varies in a timed relationship with the frequency of the connected A. C. supply source. The said supply is impressed upon the full wave rectifier and, therefore, the rectified voltage impressed on resistance R immediately drives the grid bias negative with respect to the cathode which is of sufficient value to prevent further flow of plate current in the triode output circuit but, as mentioned, before the grid bias becomes effective to reduce the plate current to substantially zero value, a pulse is impressed upon the output circuit of the triode in which the transformer 38 is included. If the contacts 30 are maintained in an operated condition for a number of com-

plete cycles of the supply source, a control pulse is initiated automatically each time the voltage condition of the rectified supply passes through zero, thus initiating a series of equally spaced and timed control pulses. By referring to the graphic representations in Figs. 7 to 7B, the voltage conditions in the various sections of the circuit are shown; Fig. 7 shows the alternating voltage supply wave forms impressed on the diode plates; Fig. 7A shows the rectified voltage wave forms impressed on the resistance R and Fig. 7B shows the series of short equally spaced and accurately timed pulses or control signals impressed on the triode output circuit.

The circuit just described has shown one method of converting a single phase sinusoidal wave into a series of short impulses having non-sinusoidal wave forms, all of which are similar, and that in the said circuit two impulses are initiated for each complete cycle of the alternating current supply.

By referring now to Fig. 4, it will be understood how the out-of-phase impulses are generated. The individual circuits embodying the individual electric discharge devices T—1 to T—8 are separately connected to different output terminals of a phase-splitter or transformer 40, so that a voltage supply of different phases is impressed on each of the diode plates of the tubes T—1 to T—8. By referring to Fig. 3, it is shown diagrammatically and vectorially how two transformers A and B, each having a plurality of secondary windings, the number of which depends upon the number of phases to be generated, are connected for converting the single phase supply into a plurality of phases.

In the primary circuit of one transformer AP—1 is a condenser C to cause the current to lead the voltage, and in the primary of the other BP—2 is an inductance L to cause the current to lag the voltage. The values of C and L are chosen so that the current flow in the primary windings are ninety degrees out of phase.

Primary winding AP—1 is shown to have seven secondary windings AS—1 and primary windings BP—2 has seven secondary windings BS—2 connected as shown. The turns ratio of the individual secondary windings vary for each phase connection, and the turns ratio of the connected secondary windings of both transformers are such that the voltage output for the open circuits are equal. The phase direction is shown vectorially by the arrows for each separate phase developed. This arrangement and connection of the primaries and secondaries of the said transformers results in eight separate secondary circuits, each phase spaced twenty-two and a half electrical degrees apart.

The outputs of the different phases, namely 1 to 8, are connected separately across the diode plates of the tubes T—1 to T—8 as shown in Fig. 4. It will be understood now that, if all the control contacts 30 are closed, a series of signal impulses will be generated for each phase and that the impulses for each phase are displaced with respect to each other by twenty-two and a half electrical degrees. By referring to Fig. 8, signal impulse representations are shown for each of the phases. Since no two impulses overlap or occur at the same time, any number of phases may be transmitted over the selected type of transmission system. For this reason the contacts 30 may be all connected simultaneously to a common circuit including the output transformer 38 as shown, which in turn is then connected to a suitable amplifier and signal impulse transmitter 41, or for certain conditions to the transmission medium directly.

It is obvious now that timed signal impulses may be transmitted upon closure of one or more of the control contacts 30. When it is desired to transmit character representations including combinational groups of timed impulses the contacts 30 may be operated simultaneously in any combination to initiate the combinational group of impulses as shown in Fig. 5, for example, see the group of impulses represented in Fig. 9 representing a particular representation and initiated by operating the contacts 30 associated with phases 1, 2 and 6 and tubes T—1, T—2 and T—6.

In this manner, each tube circuit primarily becomes an independent impulse generator, the conditioning of each circuit being independent of the conditioning of the other. The impulses initiated by each circuit when the tubes are rendered conductive are displaced in phase with respect to any other series of impulses generated by the remaining circuits. The length of time each circuit is maintained operative is also independent with respect to the remaining circuits, that is, the individual contacts 30 may be closed for a timed interval so that a single impulse is generated or may be closed for a longer interval of time to initiate a series of equally spaced impulses as long as the contacts remain closed.

It is evident too, and has been shown in the said co-pending application, that the individual contacts 30 may be operated by permutation bars mounted beneath the key bars and operated in any desired combination to operate the contacts in the impulse generator plate circuit accordingly.

While there has been shown and described and pointed out the fundamental novel features of the invention as applied to a single modification, it will be understood that various omissions and substitutions and changes in the form and details of the device illustrated and in its operation may be made by those skilled in the art without departing from the spirit of the invention. It is the intention therefore to be limited only as indicated by the scope of the following claims.

What is claimed is:

1. A signaling system comprising a source of phase displaced energy, a common circuit, electric discharge devices conductively connected to the different phases of said source to initiate accurately timed phase displaced impulses and normally disconnected from said common circuit, and means to connect selectively the electric discharge devices to said common circuit to impress thereupon variably timed phase displaced impulses.

2. A signaling system comprising a source of phase displaced energy, a common circuit, electric discharge means, having control elements, conductively connected to the different phases to operate independently of each other, individual means to control the conditioning of the said control elements to render the corresponding electric discharge means conductive periodically to initiate timed phase displaced impulses, and means to impress at variable times the said impulses upon the common circuit.

3. A signaling system comprising an electrical distributor including a plurality of electric discharge devices, means to operate said devices

periodically in a definite sequence with respect to each other and independently of each other to initiate variably timed signal impulses, and means to control the initiation of the signal impulses.

4. A signaling system comprising a source of alternating current of predetermined frequency, means to transform said current into n number of phase displaced currents of the same frequency, means to convert said phase displaced currents into n number of series of short signal impulses and including means whereby the frequency of each series of impulses is a predetermined multiple of said predetermined frequency, and means to control selectively the initiation of predetermined ones of said impulses to represent different characterizations.

5. A signaling system comprising, in combination, a plurality of electric discharge devices, a source of phase displaced and periodically varying energy to render the tubes operative at periodically timed intervals to initiate control signals and means to operate the devices independently of each other and in a definite sequence with respect to each other, individual means to control the operation of each electric discharge device so as to operate them whenever the said energy attains a predetermined value, and means to control selectively the initiation of the control signals.

6. The invention set forth in claim 5 including means to render the said discharge devices conductive whenever the varying energy passes through zero value.

7. A signaling system comprising a plurality of electric discharge devices having input and output circuits therefor, individual control elements for said discharge devices, in each of the said input circuits, a source of phase displaced energy conductively connected to the said input circuits to condition periodically and cyclically the associated control elements to control the conductivity of the discharge devices, and individual means in the said output circuits selectively operated to render the discharge devices conductive to initiate timed signal impulses.

CLYDE J. FITCH.