(12) INTERNATIONAL APPLICATION PUBLISHED UNDER THE PATENT COOPERATION TREATY (PCT)

(19) World Intellectual Property Organization
International Bureau

(43) International Publication Date
2 October 2014 (02.10.2014)

WIPO | PCT

(10) International Publication Number
WO 2014/158377 A1

(51) International Patent Classification:
G21C 13/00 (2006.01) *G21C 15/00* (2006.01)

(21) International Application Number:
PCT/US2014/015491

(22) International Filing Date:
10 February 2014 (10.02.2014)

(25) Filing Language: English

(26) Publication Language: English

(30) Priority Data:
13/802,960 14 March 2013 (14.03.2013) US

(71) Applicant: **WESTINGHOUSE ELECTRIC COMPANY LLC** [US/US]; 1000 Westinghouse Drive, Suite 141, Cranberry Township, Pennsylvania 16066 (US).

(72) Inventors: **SELFRIDGE, David W., Jr.**; 170 Bonita Drive, Greensburg, Pennsylvania 15601 (US). **LE GOFF, Martin**; 620 Adele Drive, Irwin, Pennsylvania 15642 (US).

(74) Agents: **COLDREN, Richard J.** et al.; Westinghouse Electric Company LLC, 1000 Westinghouse Drive, Suite 141, Cranberry Township, Pennsylvania 16066 (US).

(81) Designated States *(unless otherwise indicated, for every kind of national protection available)*: AE, AG, AL, AM, AO, AT, AU, AZ, BA, BB, BG, BH, BN, BR, BW, BY, BZ, CA, CH, CL, CN, CO, CR, CU, CZ, DE, DK, DM, DO, DZ, EC, EE, EG, ES, FI, GB, GD, GE, GH, GM, GT, HN, HR, HU, ID, IL, IN, IR, IS, JP, KE, KG, KN, KP, KR, KZ, LA, LC, LK, LR, LS, LT, LU, LY, MA, MD, ME, MG, MK, MN, MW, MX, MY, MZ, NA, NG, NI, NO, NZ, OM, PA, PE, PG, PH, PL, PT, QA, RO, RS, RU, RW, SA, SC, SD, SE, SG, SK, SL, SM, ST, SV, SY, TH, TJ, TM, TN, TR, TT, TZ, UA, UG, US, UZ, VC, VN, ZA, ZM, ZW.

(84) Designated States *(unless otherwise indicated, for every kind of regional protection available)*: ARIPO (BW, GH, GM, KE, LR, LS, MW, MZ, NA, RW, SD, SL, SZ, TZ, UG, ZM, ZW), Eurasian (AM, AZ, BY, KG, KZ, RU, TJ, TM), European (AL, AT, BE, BG, CH, CY, CZ, DE, DK, EE, ES, FI, FR, GB, GR, HR, HU, IE, IS, IT, LT, LU, LV, MC, MK, MT, NL, NO, PL, PT, RO, RS, SE, SI, SK, SM, TR), OAPI (BF, BJ, CF, CG, CI, CM, GA, GN, GQ, GW, KM, ML, MR, NE, SN, TD, TG).

Declarations under Rule 4.17:

— *as to applicant's entitlement to apply for and be granted a patent (Rule 4.17(ii))*

[Continued on next page]

(54) Title: LOCALIZED VACUUM REMOVAL OF STEAM GENERATOR DEPOSITS

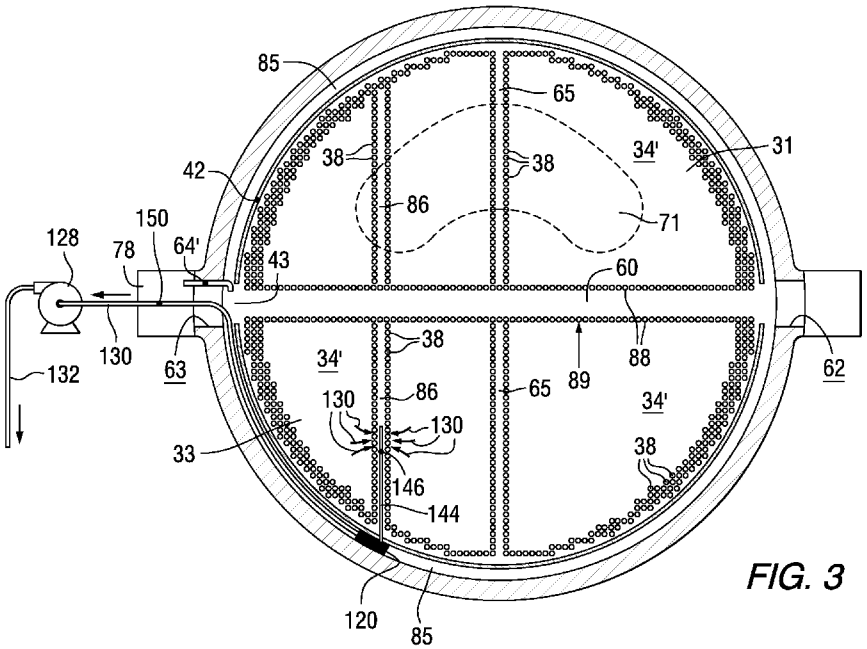

FIG. 3

(57) Abstract: A method of cleaning sludge from the top of tube sheet (34')of a nuclear steam generator (10) includes introducing a moveable suction apparatus (120) having attached vacuum inlets (148), said moveable suction apparatus introduced through handholes (62) in the side of the generator and into either the no tube lane (60) or the circumferential annulus, and sludge vacuuming the top of the tube sheet (34').

WO 2014/158377 A1

— *as to the applicant's entitlement to claim the priority of the earlier application (Rule 4.17(iii))*

Published:

— *with international search report (Art. 21(3))*

LOCALIZED VACUUM REMOVAL OF STEAM GENERATOR DEPOSITS

BACKGROUND

1. Field

[0001] This invention relates to steam generators and more particularly to methods for removing sludge deposits from the top of tube sheets (secondary side) of steam generators.

2. Description of Related Art

[0002] A nuclear steam generator is a pressurized vessel divided into a primary and a secondary side. The primary and the secondary sides are separated by the "tube sheet". As in any heat exchanger, both primary and secondary sides have an inlet and an outlet. In order to increase the heat exchange surface, the tube sheet is drilled with a plurality of holes organized in two groups. The primary side is divided in two sections by the "divider plate" in a way that one group of hole communicates with the primary side inlet (to form the "hot leg") and the second group of hole communicate with the primary side outlet (to form the "cold leg"). U-shaped tubes attached to the tube sheet extend in the secondary side and connect the holes from the hot leg to the holes from the cold leg. These U-shaped tubes form the tube bundle. The primary hot water can now enter the hot leg, travel through the tubes where the heat transfer takes place and leave the steam generator through the cold leg. On the secondary side, cold water ("feedwater") enters through the secondary side inlet ("feed water nozzle"), turns into steam from the heat transfer through the tubes and it exits through the secondary side outlet ("steam nozzle"). This configuration is described for example by U.S. Patent Specification Nos.: 8,238,510; 5,036,871; 4,273,076; and 4,079,701 (*Haberman; Ruggieri et al.; Lahoda et al.* and *Hickman et al.,* respectively), many of which also relate to top of tube sheet sludge removal.

[0003] Since the primary fluid contains radioactive particles and is isolated from the feedwater only by the U-tube, the U-tube walls are the boundary for isolating these radioactive particles from the secondary side. It is, therefore, important that the U-tubes be maintained defect-free so that no leaks/breaks will occur in the U-tubes.

[0004] A variety of degradation mechanisms have been experienced on the shell side of steam generators. These degradation mechanisms may be loosely divided into two categories; mechanical degradation, such as wear or denting and chemical induced degradation such as stress corrosion cracking (SCC) or Inter/transgranular attack. High caustic levels found in the vicinity of the cracks in tube specimens taken from operating steam generators and the similarity of these cracks to failures produced by caustic under controlled laboratory conditions, have identified high caustic levels as the possible cause of the intergranular corrosion, and thus the possible cause of the tube cracking. Acid conditions have also empirically demonstrated the ability to cause tubing degradation. Elevated concentrations of deleterious species such as lead or copper and situations with elevated electrochemical potential are also catalysts for tubing Accelerated degradation as a result of localized mechanical stresses from deformation of tubing via in situ formation of magnetite, known as denting, is also a cause of accelerated tubing degradation. These degradation mechanisms typically occur in the vicinity of a sludge pile present on the top of tubesheet on the shell side of the steam generator. The sludge is mainly iron oxide particulates and copper compounds along with traces of other minerals that have settled out of the feedwater onto the tube sheet, and into the annulus between the tube sheet and the tubes. The level of sludge accumulation may be inferred by eddy current testing with a low frequency signal that is sensitive to the magnetite in the sludge. The correlation between sludge levels and the tubing degradation location strongly suggests that the sludge deposits provide a site for concentration of impurities at the tube wall that results in the onset of tubing degradation.

[0005] To remove these deposits, sludge lancing is performed every one to two refueling outages. Currently, standard practice involves spraying high pressure water through the tube bundle and directing the flow to suction hoses where the loose deposits can be removed and filtered. These suction hoses may be located at a substantial distance from the completely separate high pressure lance. This prior art process typically requires large pumping and filtration systems which use several hoses to deliver the cleaning media, which can be located over 500 feet away. The high pressure water is typically delivered from the “no” (central) tube lane (lane without tubes separating the hot leg side from the cold leg side) of the steam generator and “pushes” the deposits into

the suction hose system. The lancing process requires the tube sheet to be lanced several times to ensure satisfactory cleanliness results, which is time consuming and not cost effective.

[0006] In most nuclear steam generators in service today, there are usually 6 inch (15.2 cm.) diameter hand holes in the shell of the steam generator near and above the tube sheet that has an associated hole in the wrapper providing access to the tube sheet for removal of the sludge deposits.

[0007] In regard of the description of the related art made above, there is a need for a method that can clean the top of the tube sheet with low cost and efficiency without second or third application, and a main object of this invention is to provide such a method.

SUMMARY

[0008] The above mentioned problems are solved and object accomplished by providing a method of sludge removal from the top of tube sheet surface in a tubular steam generator having a plurality of entry handholes allowing access to the no tube lane and to the circumferential annulus, consisting of: 1) opening at least one handhole allowing access to the no tube lane and/or to the circumferential annulus. 2) introducing at least one moveable sludge suction apparatus within the no tube lane and/or the circumferential annulus, said apparatus includes a suction head with at least one vacuum inlet fitting within a row of tubes of the tube bundle; and 3) sludge vacuuming the hot leg side and cold leg side of the tube bundle and top tube sheet surface with the moveable sludge suction apparatus, allowing continuous and complete vacuuming of sludge in the hot and cold sides of the tube bundle without the introduction of pressurized cleaning water during sludge removal activity.

[0009] The invention also resides in use of a moveable sludge suction apparatus. The said apparatus is able to deliver a wand and a suction head assembly in bundle and has an optional light and visual means. The wand connects the suction head to the suction apparatus and the optical device acts to inspect sludge removal from the top of the tube sheet.

[0010] The method proposed in this invention approaches sludge removal through a local, in-bundle suction method. This method gives the ability to clean specific areas of interest allowing for less time to be spent on areas already cleaned or more time for heavier loaded regions. The method preferably includes visual inspection capabilities to provide "live" cleanliness results, eliminating the need to perform a separate inspection that follows typical prior art sludge lancing. The inspection capabilities also provide 100% accessible in-bundle tube sheet inspections. Currently, in-bundle inspections are performed separately, following the acceptance of sludge lancing results, and on a limited scope basis.

BRIEF DESCRIPTION OF THE DRAWINGS

[0011] While the specification concludes with claims particularly pointing out and distinctly claiming the subject matter of the invention, it is believed the invention will be better understood from the following description, taken in conjunction with the accompany drawings, wherein:

[0012] FIG. 1 is a partial cross-sectional view in elevation of one example of a typical steam generator ("SG").

[0013] FIG. 2 is a plan view of the tube sheet and tubes in a steam generator, with a standard prior art high pressure sludge lance system in place, usually requiring heavy equipment.

[0014] FIG. 3, which best shows the general invention, is a plan view of the tube sheet, with circumferential annulus and tubes in a steam generator , where a moveable sludge suction apparatus composed of a suction head and a wand assembly connected to a remote delivery system vacuums sludge directly in the tube bundle.

[0015] FIG. 4 is a conceptual design of one possible embodiment of the suction head and wand assembly that can be used in this invention, shown vacuuming between rows of tubes.

[0016] FIG. 5 is a side view of the suction head and wand of FIG. 4.

DESCRIPTION OF THE PREFERRED EMBODIMENT

[0017] This invention describes a method for deposit removal from the top of tube sheet of steam generators. The method will be implemented through a suction wand that is able to be delivered in the majority of current SG tube gaps. The suction wand will be delivered from the handhole, the no tube lane or from the circumferential annulus of the SG. It will consist, preferably, of at least one suction head capable of removing soft sludge deposits. Abilities also include lighting and video inspection for viewing cleaning results and potential tool position.

[0018] This method would only require the use of a single air operated diaphragm pump for a vacuum flow source. This replaces the current method of delivering high pressure water with flows from 25 to 48 GPM (gallons/minute) and up to 3,000 psi (204 atmospheres). The method (and its delivery system) can perform live cleanliness inspection, eliminating the need for several platform set ups that are currently in use.

[0019] In order to better understand the invention, we must refer to the prior art at this time. In a U-tube type steam generator, a tube sheet supports a bundle of heat transfer U-tubes. During operation, sludge forms on the tube sheet around the U-tubes and in the annulus, causing potential failure of the tubes. Failure of the tubes may result in a release of radioactive particles from the primary reactor coolant into the secondary side system. The invention, herein described, is a method for removing this sludge accumulation by a vacuum process rather than a high pressure process.

[0020] Referring now to FIG. 1, the nuclear steam generator 10, comprises a lower shell 12 connected to a frustoconical transition shell 14 which connects lower shell 12 to an upper shell 16. A dished head 18 having a steam nozzle 20 disposed thereon encloses upper shell 16 while the SG bowl 22 having inlet nozzle 24 and an outlet nozzle 26 disposed thereon encloses lower shell 12. A dividing plate 28 centrally disposed in the SG bowl 22 divides the SG bowl 22 into an inlet compartment 30 and an outlet compartment 32. The inlet compartment 30 is in fluid communication with inlet nozzle 24 while outlet compartment 32 is in fluid communication with outlet nozzle 26. Tube sheet 34, having tube holes 36 therein, is attached to lower shell 12 and the SG bowl 22 so as to isolate the portion of steam generator 10 above tube sheet 34 from the portion below tube sheet 34 in a fluid tight manner.

[0021] Again, referring to FIG. 1, in operation, hot reactor coolant fluid H having been heated from circulation through the reactor core enters steam generator 10 through inlet nozzle 24 and flows into inlet compartment 30. From inlet compartment 30, the reactor coolant fluid flows through tubes 38 in tube sheet 34, up through the U-shaped curvature of tubes 38, down through tubes 38 into outlet compartment 32. From outlet compartment 32, the now cooler (due to heat transfer) reactor coolant C is passed through outlet nozzle 26 and circulated through the remainder of the reactor coolant system. The inlet side of the tube bundle provides a tube hot leg 31 and tube return provides a tube cold leg 33 which exits to outlet compartment 32. A secondary feedwater W is fed through inlet nozzle 46.

[0022] During operation, inlet feedwater W enters steam generator 10 through feedwater inlet nozzle 46, flows through a feedwater header, and out of feedwater header through discharge ports. The greater portion of the feedwater exiting discharge ports, flow down annular chamber 44 until the feedwater contacts tube sheet 34. Once reaching the bottom of annular chamber 44 near tube sheet 34, the feedwater is directed inward around tubes 38 of tube bundle 40, which itself is enclosed by wrapper 42, where the feedwater passes in a heat transfer relationship with tubes 38. The hot reactor coolant fluid H being in tubes 38 transfers heat through tubes 38 to the feedwater thereby heating the feedwater. The heated feedwater then rises by natural circulation up through the tube bundle 40. In its travel around tube bundle 40, the feedwater continues to be heated until steam S is produced and passes through steam nozzle 20.

[0023] Referring now to prior art FIG. 2, the sludge referred to forms on top of tube sheet 34′ and around tubes 38. This sludge which usually comprises iron oxides, copper compounds, and other metals is formed from these materials settling out of the feedwater onto tube sheet top 34′. Again, referring to prior art FIG. 2, when the reactor is not operating such as during refueling, the steam generator may be deactivated and drained of most of the feedwater. Handholes such as 62 and 63 can then be opened to provide access to the interior of the steam generator. Injection peripheral headers 64 can be placed through one of the handholes 63 while suction headers 66 can be placed through the other handhole 62. The injection header 64 and the suction header 66 are shaped to fit through the handholes 62 and 63 while being able to fit around any obstructions which

might block the no tube lane 60. Injection header 64 is connected to fluid inlets 108 then to a fluid supply 100, such as a water supply, which may contain additives to help dissolve/remove the sludge. This fluid, in the fluid supply 100, is pumped 103, 103′ by pumps 102, 102′. On the other side, suction header 66 is connected to a suction pump 104, such as an air diaphragm suction pump, through suction connector 106 to sludge exit line 110′ for disposal.

[0024] Then, according to one aspect of the prior art, again shown in FIG. 2, a moveable high pressure, lance 76 with a head 77 is inserted into at least one of the handholes 62 and 63, through an opening 43 in the wrapper 42, where it proceeds down the no tube lane 60 between tubes 88 to clean gaps 89. Additional tubes are shown as 86. As can be seen, the head 77 connected to a cleaning fluid supply 100, eject cleaning fluid 82 (shown as arrows), such as pressurized water. There can be some reverse flow 110 into cleaned zone 112. High sludge accumulating region is shown as 71 in the hot leg 31. Cold leg is shown as 33. Headers 64 can inject cleaning fluid 82′ via annulus 85.

[0025] Referring now to FIG. 3, which best shows one embodiment of the invention, many of the same components are shown and labeled as in FIG. 2 and the description will not be duplicated for the sake of brevity. Handholes are shown as 62, 63, the “no” tube lane is shown as 60, and the central stay rod if utilized. By opening the handholes, access to the center tube lane 60 and circumferential annulus 85 is allowed. At least one moveable sludge suction apparatus shown generally as 120 with a wand 144 including suction head 146 with at least one vacuum inlet 148 (shown in FIG. 4) is moved/introduced into the circumferential annulus 85, through handhole 63, as shown, to remove sludge 130 (158 in FIG. 4) via pump 128 and sludge exit line 132.

[0026] The vacuum head(s) provide(s) a vacuum sufficient to remove aqueous sludge from the top surface of the tube sheet 34′. The vacuuming takes place after the SG has been drained, but with a sufficient volume of water still being present on top of the tubesheet. The vacuum is delivered through a nozzle on one side, or both sides or the bottom of the suction head, providing cleaning capability throughout the tube column as the suction head is advanced through the tube bundle. The apparatus must fit through the no tube lane 60 or annulus 85.

[0027] In operation, both the hot leg side 31 and the cold leg side 33 are vacuumed individually with the moveable sludge vacuum apparatus 120 with its wand 144 and suction head 146. Header 64′ is optional. As water is removed with the sludge, clean water will have to be pumped back in order to maintain a constant water level. The moveable sludge suction apparatus 120 can be moveable robotic delivery cart or other device connected to vacuum pump 128 by outlet sludge/control umbilical 150. Arrows 130 show sludge removal. An optional mounting mechanism 78 for apparatus 120 is shown. Vacuum pump 128 can extract sludge 130 to provide exit line 132.

[0028] Referring now to FIG. 4, the wand 144 and suction head 146 of a moveable sludge suction apparatus is shown, including at least one vacuum inlet 148. The wand and suction head assembly can be extended or retracted shown by arrow 138, by any suitable mechanism known in the art attached to the moveable sludge vacuum apparatus shown in FIG. 3 as 120. The wand 144 can be collapsible, telescoping, pivoting, flexible, etc.. Visual means such as an optical scanning device 152 can also be mounted/present on or in the suction head 146 to scan sludge removal results. Unremoved sludge is shown as 154 on top of the top surface of the tube sheet 34′.

[0029] In FIG. 5, the top of the tube sheet 34′ free of sludge is shown as well as tubes 38. Lighting 156 can be located on or in the suction head 146 to aid the visual means 152. As can be seen, in operation, aqueous sludge 154 is drawn, arrows 158, into the suction inlet. As shown, in one embodiment, the wand section and suction head advance on top of the top surface of the tube sheet.

[0030] While specific embodiments of the invention have been described in detail, it will be appreciated by those skilled in the art that various modifications and alternatives to those details could be developed in light of the overall teachings of the disclosure. Accordingly, the particular embodiments disclosed are meant to be illustrative only and not limiting as to the scope of the invention which is to be given the full breadth of the appended claims and any and all equivalents thereof.

What is claimed is:

1. A method of sludge removal from the top tube sheet surface (34′) in a tubular steam generator (10) having a plurality of entry handholes (62, 63) allowing access to the no-tube lane (60) and to the circumferential annulus (85), consisting of:

1) opening at least one handhole (62, 63), allowing access to the no-tube lane (60) and to the circumferential annulus (85);

2) introducing at least one moveable sludge suction apparatus (120) within the no-tube lane (60) or the circumferential annulus (85), said apparatus includes a suction head (146) with at least one vacuum inlet (148); and

3) sludge vacuuming of the top of tube sheet surface (34′) with the moveable sludge suction apparatus (120).

2. The method of Claim 1, including inspecting the top of tube the sheet (34′) surface by at least one optical scanning device (152) mounted on or in the suction head (146).

3. The method of Claim 1, including lighting the path of the suction head with a lighting device (156) mounted on or in the suction head (146).

4. The method of Claim 1, where a wand (144) connects the suction head (146) to the moveable sludge suction apparatus (120).

5. The method of Claim 1, wherein the moveable sludge suction apparatus (120) is introduced into the no tube lane (60).

6. The method of Claim 1, wherein the moveable sludge suction apparatus (120) is introduced into the circumferential annulus (85).

7. The method of Claim 1, wherein a wand (144) connects the suction head (146) to the moveable sludge suction apparatus (120), which wand (144) moves the suction head between tubes (38) of the tube bundle.

8. The method of Claim 1, wherein the sludge (154) is aqueous sludge wherein the water level is maintained by a separate injector header (64′).

9. The method of Claim 1, wherein a pump (128) is used to remove sludge (154).

10. A moveable sludge suction apparatus (120), wherein said apparatus is able to deliver a wand (144) and a suction head (146) assembly into a tube bundle, in a tubular steam generator (10) having a tube sheet (34), and has optional light (156) and visual means (152), where the wand (144) connects the suction head (146) to the suction apparatus (120) and the light device (156) acts to inspect sludge removal from the top of the tube sheet (34′).

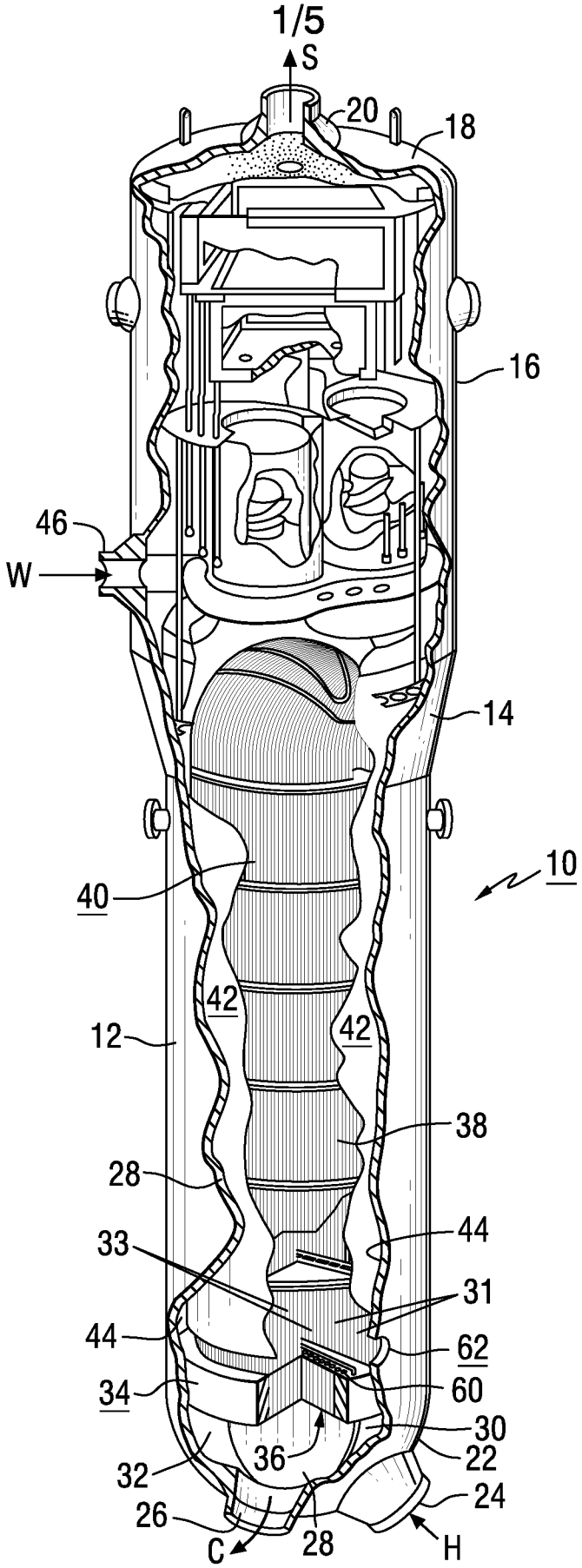
S
20
18
16
46
W
14
10
40
42
42
12
38
28
44
33
31
44
62
34
60
30
36
22
32
24
26
C
28
H

FIG. 1

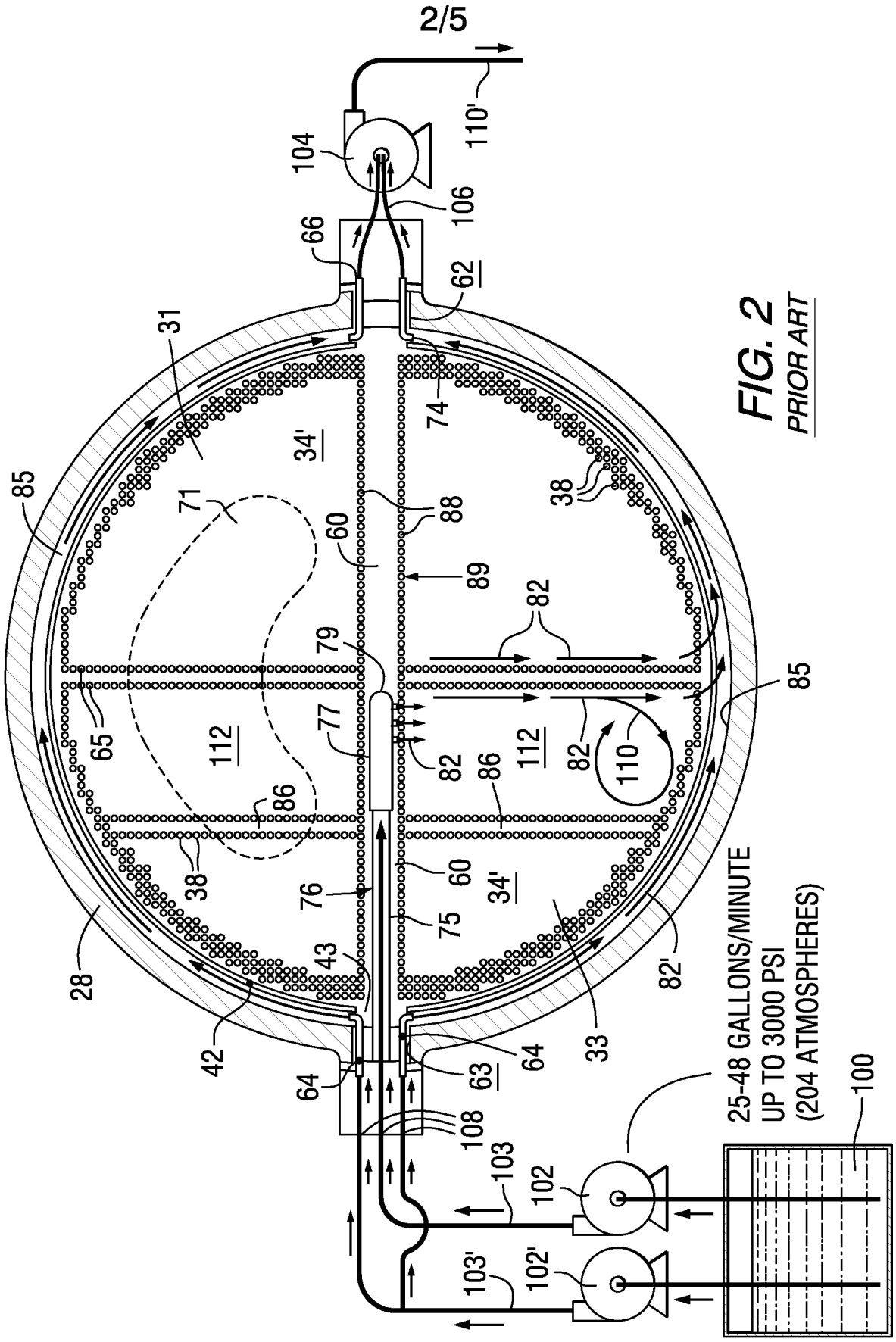

FIG. 2
PRIOR ART

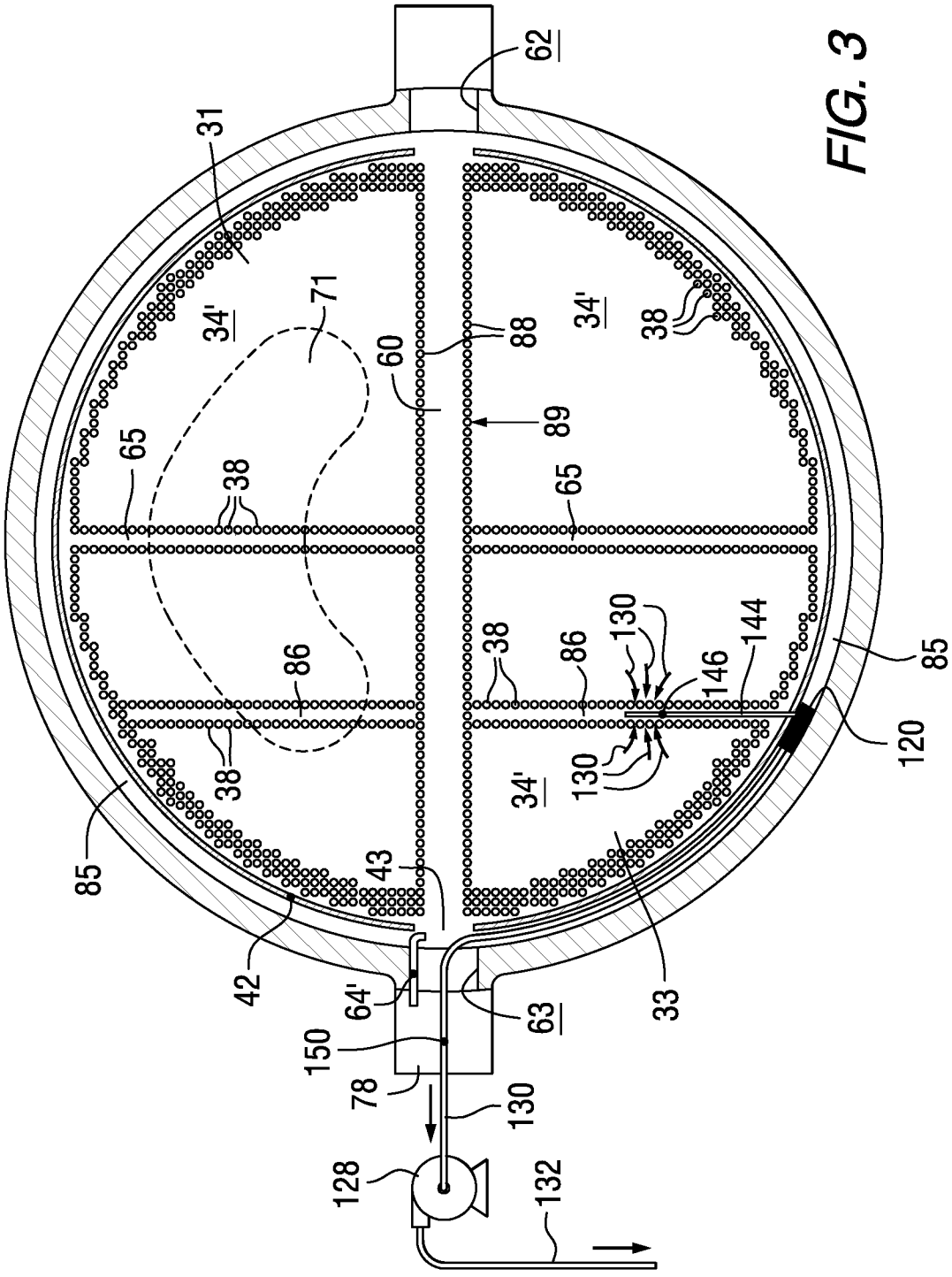
62
31
34'
71
60
88
34'
38
89
65
38
65
38
86
38
86
130
144
146
85
120
130
34'
38
85
43
42
64'
63
33
150
78
130
128
132

FIG. 3

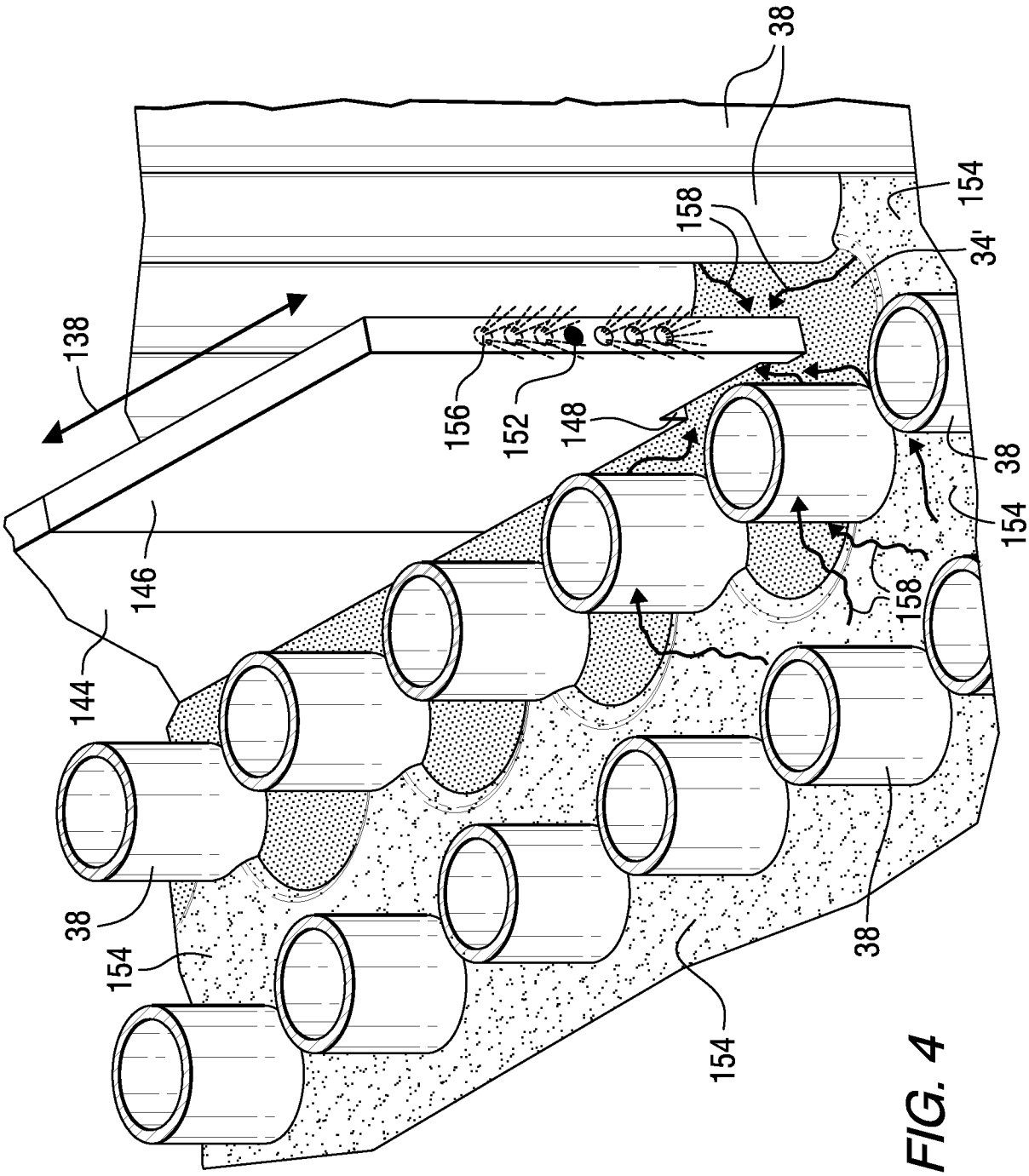

FIG. 4

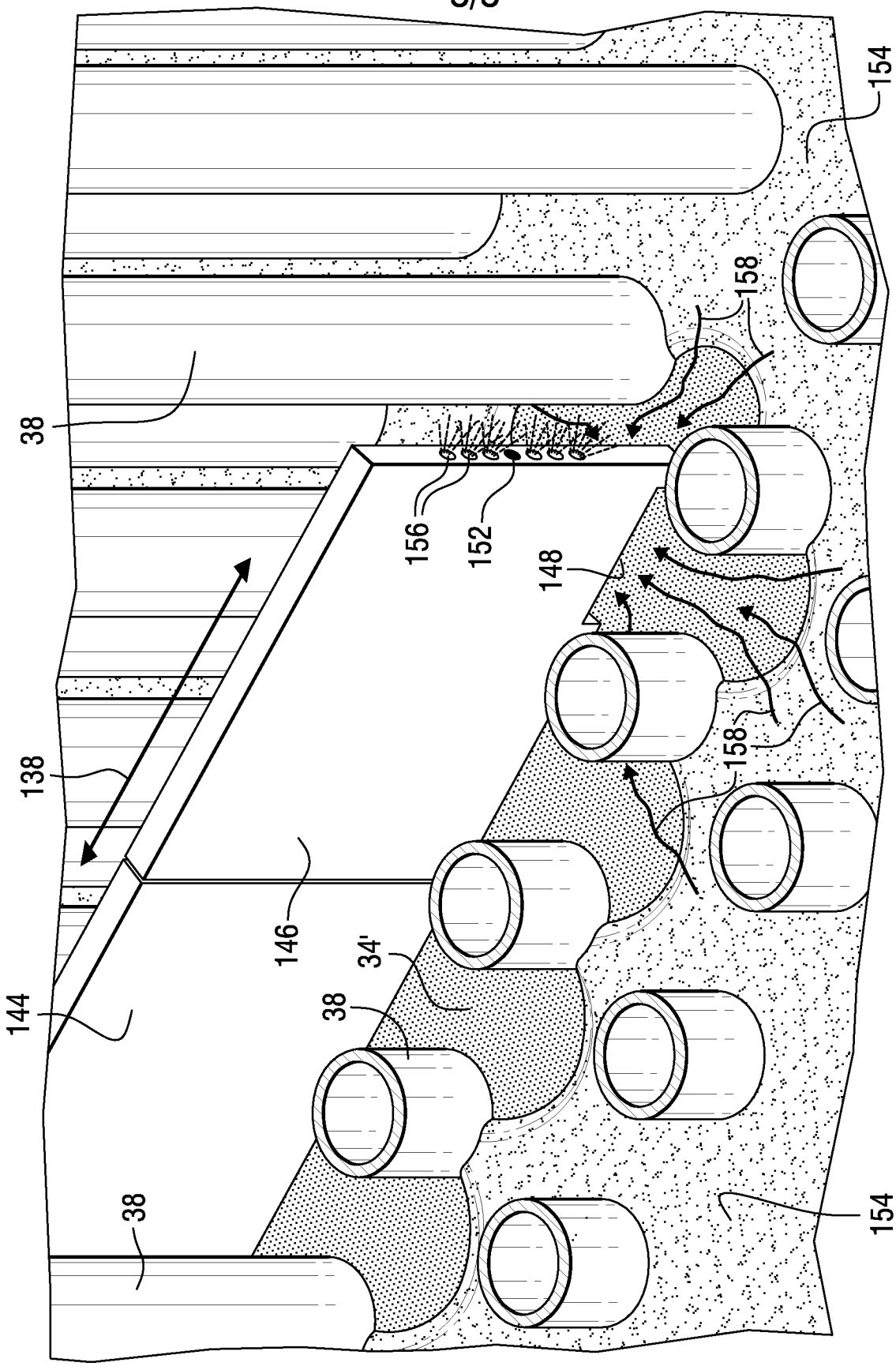

FIG. 5

INTERNATIONAL SEARCH REPORT

International application No.
PCT/US2014/015491

A. CLASSIFICATION OF SUBJECT MATTER

G21C 13/00(2006.01)i, G21C 15/00(2006.01)i

According to International Patent Classification (IPC) or to both national classification and IPC

B. FIELDS SEARCHED

Minimum documentation searched (classification system followed by classification symbols)
G21C 13/00; G21C 19/42; F22B 37/54; B08B 7/00; G21C 19/00; F22B 37/48; G21C 15/00

Documentation searched other than minimum documentation to the extent that such documents are included in the fields searched
Korean utility models and applications for utility models
Japanese utility models and applications for utility models

Electronic data base consulted during the international search (name of data base and, where practicable, search terms used)
eKOMPASS(KIPO internal) & Keywords: nuclear, steam generator, sludge, deposit, suction

C. DOCUMENTS CONSIDERED TO BE RELEVANT

Category*	Citation of document, with indication, where appropriate, of the relevant passages	Relevant to claim No.
Y	US 8238510 B2 (ERIC R. HABERMAN) 07 August 2012 See column 5, lines 5-25, 60-67, claim 1 and figure 2.	1-9
A		10
Y	US 4492186 A (JOHN L. HELM) 08 January 1985 See column 5, lines 48-65, claim 1 and figure 3.	1-9
A		10
X	US 2010-0011522 A1 (GYUNG-SUB KIM et al.) 21 January 2010 See paragraphs [0048], [0082] and figure 17.	10
Y		2-4,7
A		1,5-6,8-9
Y	US 2006-0207525 A1 (ERIC LEON HERNANDEZ) 21 September 2006 See paragraph [0020] and claim 3.	5
A		1-4,6-10
A	US 4848278 A (SCOTT M. THEISS) 18 July 1989 See column 4, lines 37-57 and figure 4A.	1-10

☐ Further documents are listed in the continuation of Box C.

☒ See patent family annex.

* Special categories of cited documents:
"A" document defining the general state of the art which is not considered to be of particular relevance
"E" earlier application or patent but published on or after the international filing date
"L" document which may throw doubts on priority claim(s) or which is cited to establish the publication date of another citation or other special reason (as specified)
"O" document referring to an oral disclosure, use, exhibition or other means
"P" document published prior to the international filing date but later than the priority date claimed
"T" later document published after the international filing date or priority date and not in conflict with the application but cited to understand the principle or theory underlying the invention
"X" document of particular relevance; the claimed invention cannot be considered novel or cannot be considered to involve an inventive step when the document is taken alone
"Y" document of particular relevance; the claimed invention cannot be considered to involve an inventive step when the document is combined with one or more other such documents,such combination being obvious to a person skilled in the art
"&" document member of the same patent family

Date of the actual completion of the international search	Date of mailing of the international search report
26 May 2014 (26.05.2014)	**26 May 2014 (26.05.2014)**

Name and mailing address of the ISA/KR
International Application Division
Korean Intellectual Property Office
189 Cheongsa-ro, Seo-gu, Daejeon Metropolitan City, 302-701,
Republic of Korea
Facsimile No. +82-42-472-7140

Authorized officer
PARK, Hye Lyun
Telephone No. +82-42-481-3463

Form PCT/ISA/210 (second sheet) (July 2009)

INTERNATIONAL SEARCH REPORT

Information on patent family members

International application No.
PCT/US2014/015491

Patent document cited in search report	Publication date	Patent family member(s)	Publication date
US 8238510 B2	07/08/2012	US 2009-0010378 A1 US 2012-0269313 A1	08/01/2009 25/10/2012
US 4492186 A	08/01/1985	None	
US 2010-0011522 A1	21/01/2010	US 8418662 B2	16/04/2013
US 2006-0207525 A1	21/09/2006	US 7162981 B2	16/01/2007
US 4848278 A	18/07/1989	US 4715324 A	29/12/1987