(No Model.) 2 Sheets—Sheet 1.

J. A. LOHAGEN.

KNOCKDOWN MUSIC RACK.

No. 406,921. Patented July 16, 1889.

Fig. 1.

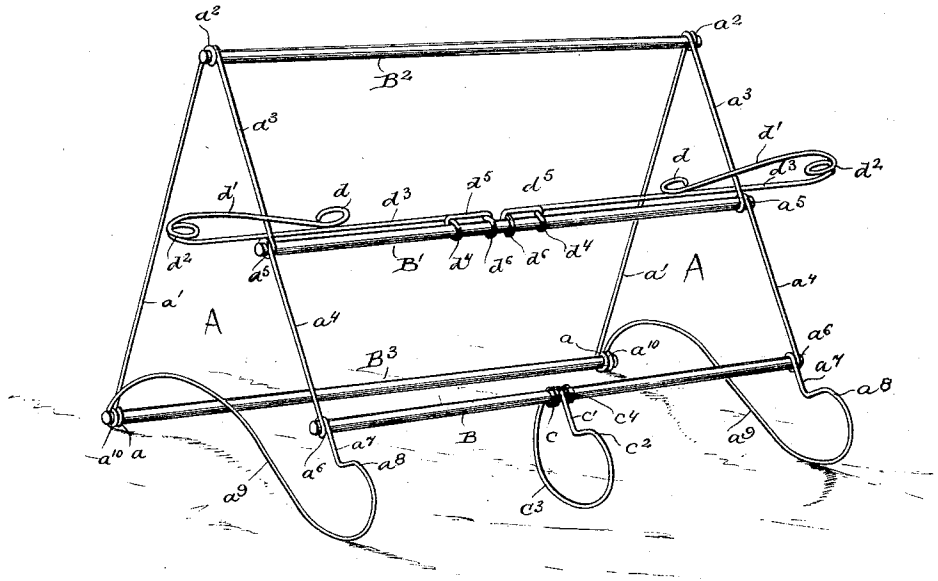

Fig. 3.

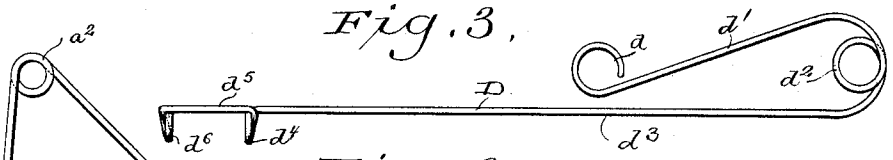

Fig. 2.

Fig. 4.

Witnesses
G. W. Young.
W. Kelly

Inventor
John A. Lohagen.
By Stout & Underwood
Attorneys

N. PETERS. Photo-Lithographer, Washington, D. C.

(No Model.) 2 Sheets—Sheet 2.

J. A. LOHAGEN.

KNOCKDOWN MUSIC RACK.

No. 406,921. Patented July 16, 1889.

Fig. 5.

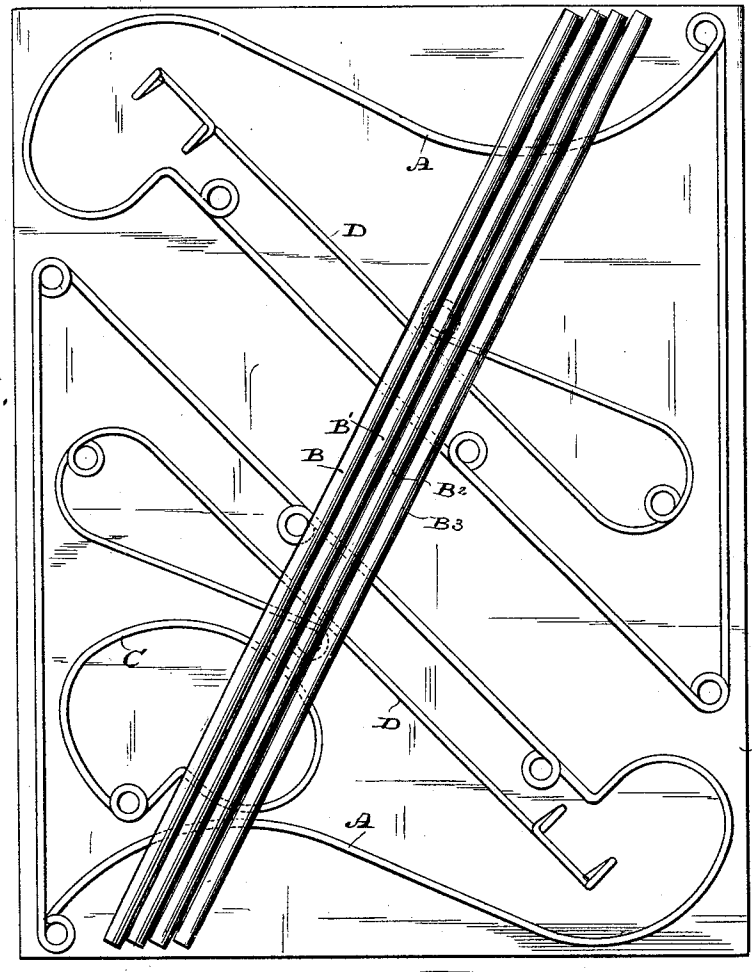

Fig. 6.

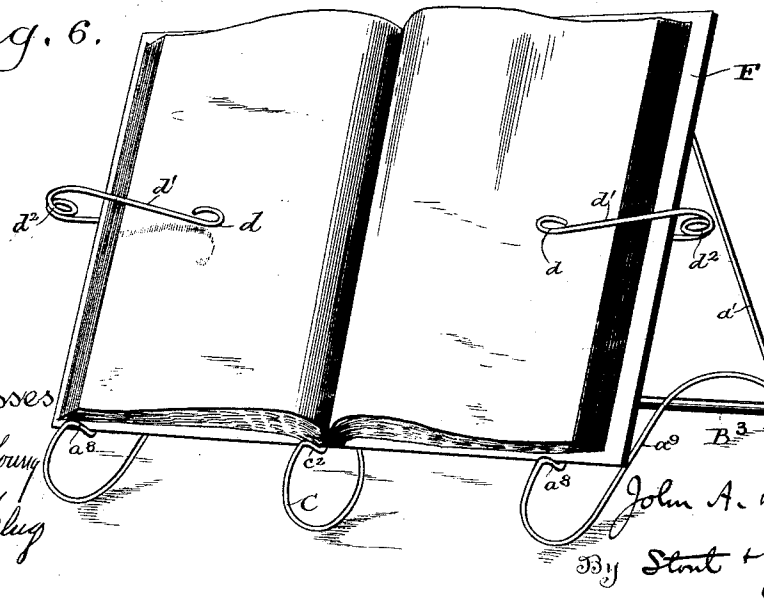

Witnesses
Geo W Young
W. Kling

Inventor
John A. Lohagen
By Stout + Underwood
Attorneys

N. PETERS. Photo-Lithographer, Washington, D. C.

UNITED STATES PATENT OFFICE.

JOHN A. LOHAGEN, OF MILWAUKEE, WISCONSIN.

KNOCKDOWN MUSIC-RACK.

SPECIFICATION forming part of Letters Patent No. 406,921, dated July 16, 1889.

Application filed October 4, 1888. Serial No. 287,131. (No model.)

To all whom it may concern:

Be it known that I, JOHN A. LOHAGEN, of Milwaukee, in the county of Milwaukee, and in the State of Wisconsin, have invented certain new and useful Improvements in Knockdown Music-Racks; and I do hereby declare that the following is a full, clear, and exact description thereof.

My invention relates to devices for holding both sheet-music and music-books in an open position; and it consists in certain peculiarities of construction, as will be fully set forth hereinafter, and pointed out in the claims.

In the drawings, Figure 1 is a perspective view of my device in position for use. Figs. 2, 3, and 4 are detached detail views of portions of my device. Fig. 5 is a plan view of my device taken apart and laid flat on a sheet of music, and Fig. 6 is a view of my device with an open music-book in place thereon.

A A represent the end pieces of my device, and are made of wire (preferably spring-wire) continuous from end to end and bent into the shape shown in Fig. 2—that is, starting with a loop or turn a of the wire, thence extending in a straight line, forming the back section a', to the top loop a^2, and thence extending down in a straight incline, forming the front section a^3 a^4, having one inturned loop a^5 at its center and another such loop a^6 near its lower end, continuing in a straight line a short distance, as marked at a^7, and thence up, forming an abrupt rounded bend a^8 at the front, and thence extending back in a practically ogee shape, forming the bottom section a^9, terminating at the rear in a loop or turn a^{10} of the wire. There are two of these end pieces A, which are preferably just alike, except that in each instance I prefer to have the loops or turns a^2, a^5, a^6, and a^{10} on the outer side of the end of the device when the same is put together, as shown in Fig. 1. These two end pieces are connected by the rods B B′ B^2 B^3, which rods are preferably round wooden ones, whose ends (which may be somewhat tapered or reduced) are slipped into the loops or turns a^6 a^6, a^5 a^5, a^2 a^2 and a^{10} a a a^{10}, respectively, of the two end pieces A A.

On the lower front rod B, I place the central or intermediate supporting-piece C, formed of a continuous strip of wire bent into the shape shown in Fig. 4—that is, starting with one or more turns or loops c, the wire is next continued in a straight line a short distance, as marked at c', (corresponding to a^7 in the end piece A,) and thence up, forming an abrupt rounded front bend c^2, (corresponding to a^8 in said end piece,) and thence continuing in a rounded bend c^3 back to the starting-point, and there terminating in one or more loops or turns c^4, and the said piece C is slipped on the rod B (which passes through the loops c c^4 of said piece) before both ends of said rod are slipped into the loops a^6 of the end pieces A.

In Fig. 3 I show one of the leaf-holding pieces or spring-clips D, which are also each made of a single continuous piece of spring-wire, starting with a loop or turn d, and continuing with a plain portion d', thence rounded and turned into a loop d^2, forming a spring, and thence back in a straight line d^3, (at an angle to the portion d',) thence turned into a loop d^4, and then another straight portion d^5, terminating in another loop or turn d^6. The two clips D are alike in construction, save that one is right-handed and the other left-handed, as shown in Fig. 1.

When it is desired to transport my device from one place to another, it can be all taken apart and packed flatly within the area of an ordinary sheet of music, (like E,) as shown in Fig. 5, and when wanted for use it is very quickly adjusted, the spring-clips D D being, of course, slipped on the rod B′, which passes through their loops d^4 d^6 before both the ends of said rods are slipped into the loops a^5 of the side pieces A, and when in place the part d^3 of each clip will be behind the part a^3 of the adjacent side piece A and the part d' of said clip in front of said part of the side piece, as shown in Fig. 1, and then when an opened piece of sheet-music or a music-book (like F) is placed thereon the portions d' of the spring-clips D will be in front of the said open leaves and the clip ends d bear against the same by reason of the spring-bends d^2 in said clips, as shown in Fig. 6, and the clips D can be adjusted on the rod B′ to and from the center of the rod to accommodate wide or narrow music-books, as the case may be. The center of sheet-music or the back of a music-book is

supported by the piece C, as shown in Fig. 6, and hence there is no sagging at this point.

Another very important use of this intermediate support C consists not only in supporting one side of the loose sheet frequently found in sheet-music, but also, as said piece C is movable on the rod B, in supporting one side of a single narrow sheet or a music-book of less width than the distance between the side pieces A A of my device.

My device combines the advantages of cheapness, efficiency, portability, and economy of space in transportation or storage, and also that of strength combined with lightness. It is a "knockdown" music-rack, and consumes only a few minutes in taking it apart or putting it together again, and, as shown, can be packed flatly between music sheets or books, or stowed away in the case of a musical instrument, and hence possesses many advantages over the ordinary music-racks in common use.

My music-racks can be made of any size desired, and for narrow sheet-music printed on single sheets it is obvious that the intermediate supporting-piece C would not be necessary if a correspondingly-narrow rack with short rods was used, and in such cases a single spring-clip D would be all that was required, and said clips D, though useful, would not always be necessary, as when the music was printed upon stiff cards; but for ordinary use the device in its entirety, as shown in Fig. 1, would be most generally useful.

Having thus described my invention, what I claim as new, and desire to secure by Letters Patent, is—

1. In a knockdown music-rack, the combination of wire end pieces having loops formed at intervals therein and supporting-bends at their lower front portions with a series of rods whose ends are slipped into said loops, thereby uniting said end pieces, substantially as set forth.

2. In a knockdown music-rack, the combination of wire end pieces having loops formed at intervals therein and supporting-bends at their lower front portions with a series of rods fitting in said loops and connecting said end pieces, and a movable intermediate wire supporting-piece bent to correspond with the supporting-bends of the end pieces and provided with loops, whereby it is fitted on the lower front rod of the rack, substantially as set forth.

3. In a knockdown music-rack, the combination of wire end pieces having loops formed at intervals therein and supporting-bends at their lower front portions with a series of rods fitting in said loops and connecting said end pieces, and a spring-wire clip or clips, each having loops whereby it is secured adjustably on one of the rods of the rack, and a spring end bent back and adapted to bear against a sheet or page of music placed beneath it, substantially as set forth.

4. The knockdown music-rack described, consisting of the combination of wire end pieces having loops formed at intervals therein and supporting-bends at their lower front portions, a series of rods fitting in said loops and connecting said end pieces, a movable intermediate wire supporting-piece bent to correspond with the supporting-bends of the end pieces and provided with loops which receive the lower front rod of the rack, and laterally-movable spring-wire clips having loops which receive one of the said rods, and spring ends bent back toward the other ends of said clips, substantially as set forth.

In testimony that I claim the foregoing I have hereunto set my hand, at Milwaukee, in the county of Milwaukee and State of Wisconsin, in the presence of two witnesses.

JOHN A. LOHAGEN.

Witnesses:
H. G. UNDERWOOD,
WILLIAM KLUG.