US 20200232455A1

(19) United States

(12) Patent Application Publication (10) Pub. No.: US 2020/0232455 A1

Blume (43) Pub. Date: Jul. 23, 2020

(54) **PUMP WITH SEGMENTED FLUID END HOUSING AND IN-LINE SUCTION VALVE**

(71) Applicant: **George H. Blume**, Austin, TX (US)

(72) Inventor: **George H. Blume**, Austin, TX (US)

(21) Appl. No.: **16/842,564**

(22) Filed: **Apr. 7, 2020**

Related U.S. Application Data

(62) Division of application No. 15/732,441, filed on Nov. 13, 2017, now Pat. No. 10,655,623.

Publication Classification

(51) **Int. Cl.**

F04B 53/10	(2006.01)
F04B 53/16	(2006.01)
F04B 1/122	(2006.01)
F04B 1/0456	(2006.01)
F04B 1/145	(2006.01)
F04B 1/143	(2006.01)
F04B 1/0461	(2006.01)
F04B 1/053	(2006.01)
F04B 1/0538	(2006.01)
F04B 53/02	(2006.01)
F04B 1/0448	(2006.01)

(52) **U.S. Cl.**

CPC ***F04B 53/1087*** (2013.01); ***F04B 53/16*** (2013.01); ***F04B 1/122*** (2013.01); ***F04B 1/0456*** (2013.01); ***F04B 1/145*** (2013.01); ***F04B 1/143*** (2013.01); *F04B 1/16* (2013.01); ***F04B 1/053*** (2013.01); ***F04B 1/0538*** (2013.01); ***F04B 53/164*** (2013.01); ***F04B 53/02*** (2013.01); ***F04B 1/0448*** (2013.01); ***F04B 1/0461*** (2013.01)

(57) **ABSTRACT**

A plunger pump fluid end in which the suction valve and seat is aligned with the plunger and the fluid end housing is constructed with multiple modules. Modules are held in a rigid assembly by staybolts that connect to the power end of the plunger pump. Said staybolts pass though bores in the central fluid module and the suction seat module and bound by a conventional threaded nut. Packing box modules are bound to the central fluid module by bolts that also pass through separate bores in the same central module. A suction valve spring retainer/plunger spacer within the plunger bore of the assembly shields the intersection of the plunger bore and the discharge bore from destructive erosion damage.

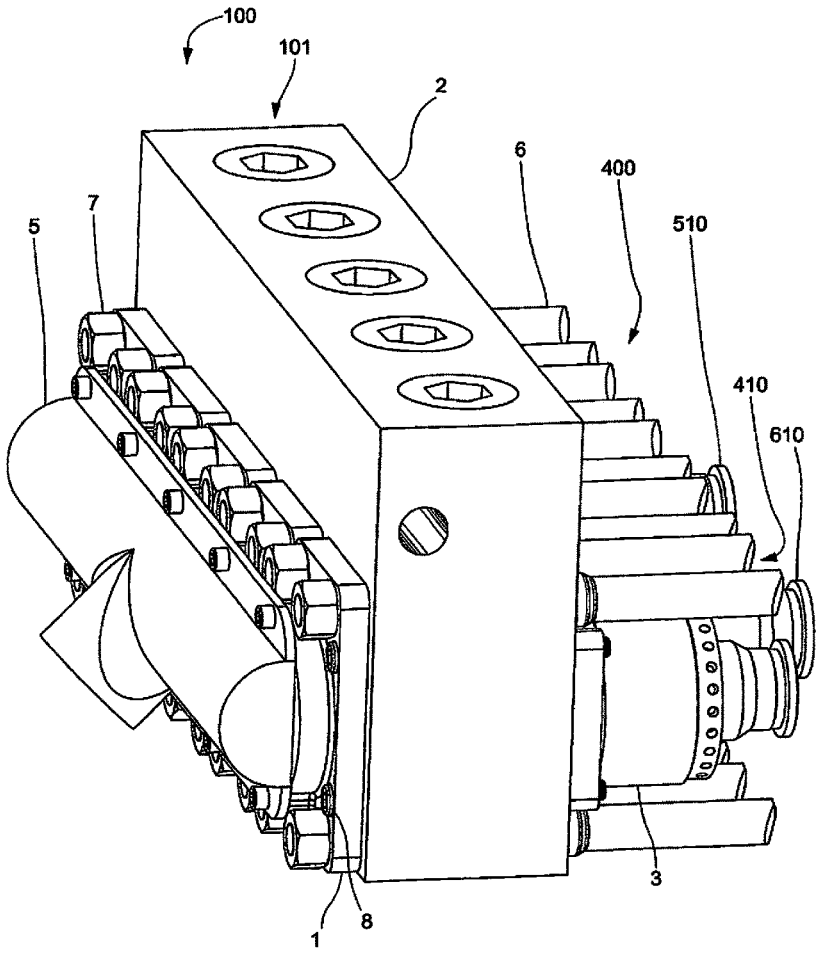

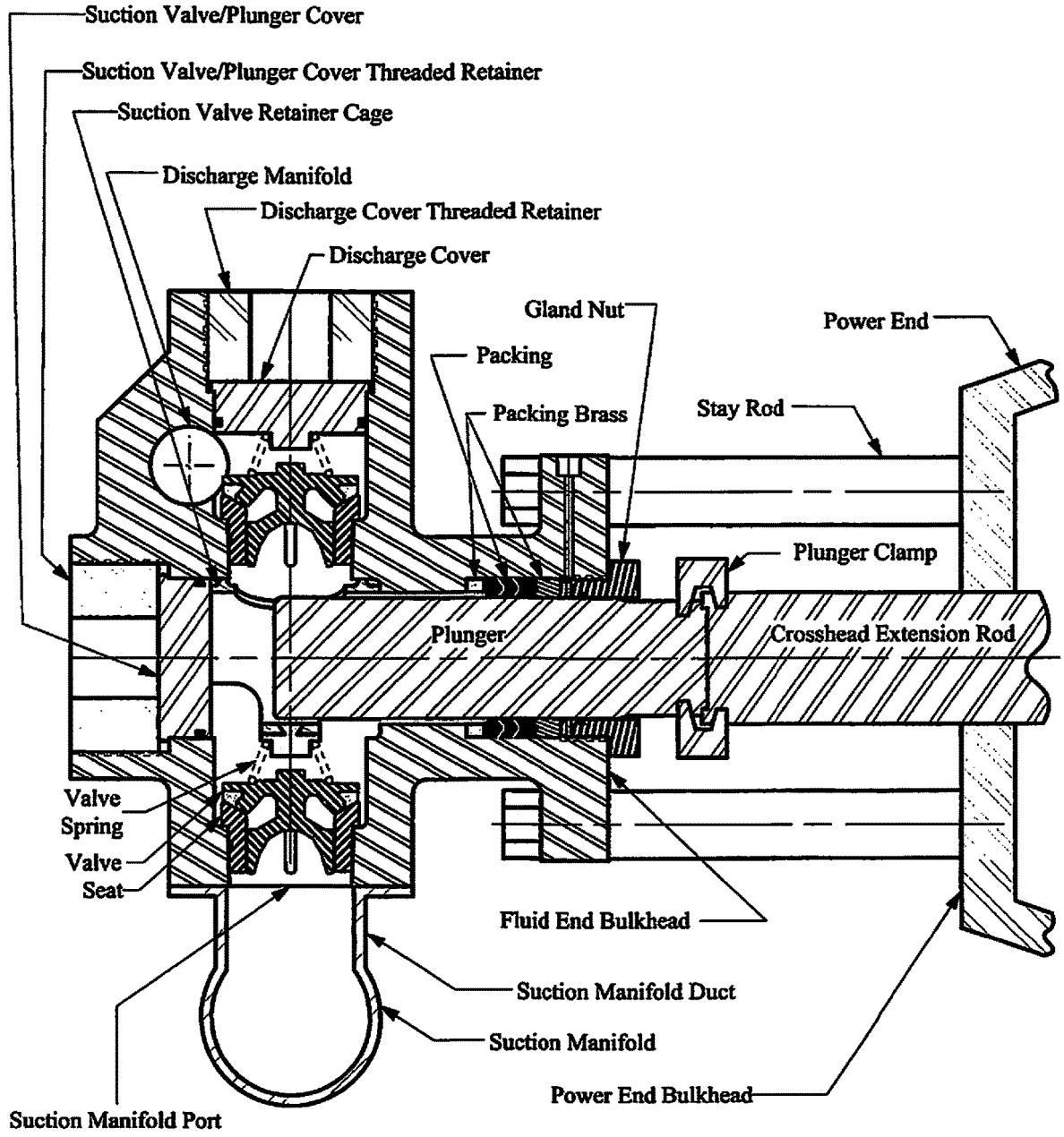

Prior Art

Figure 1

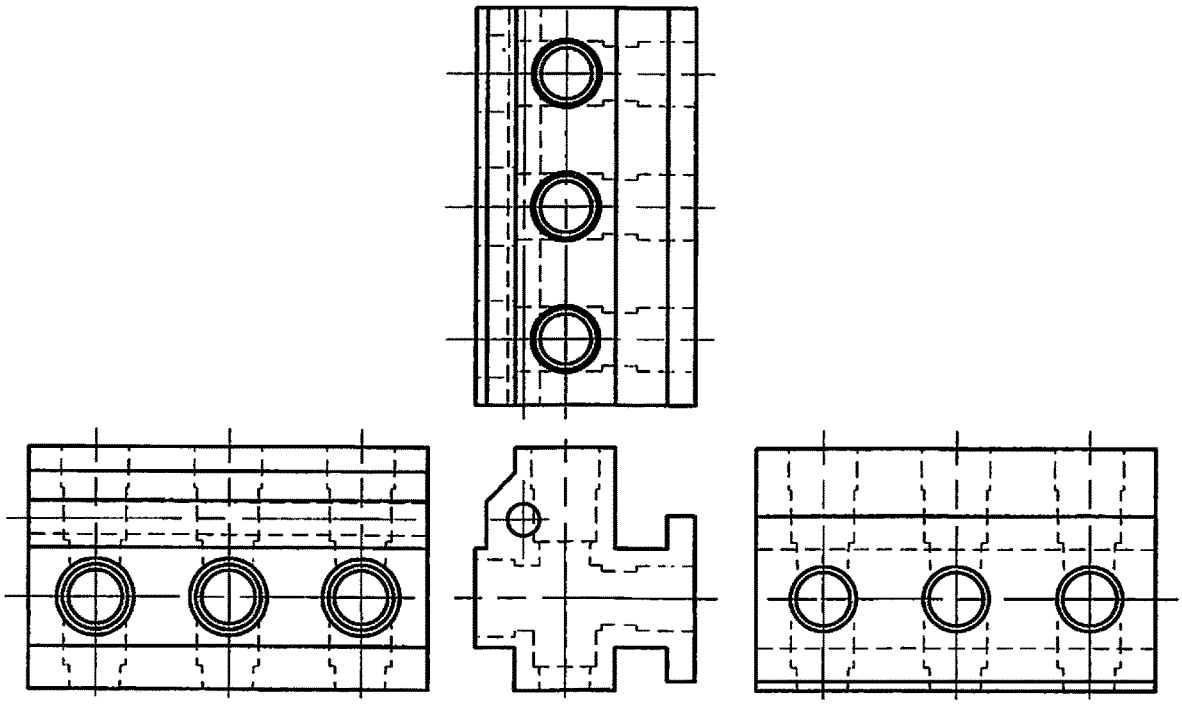

Prior Art

Figure 2

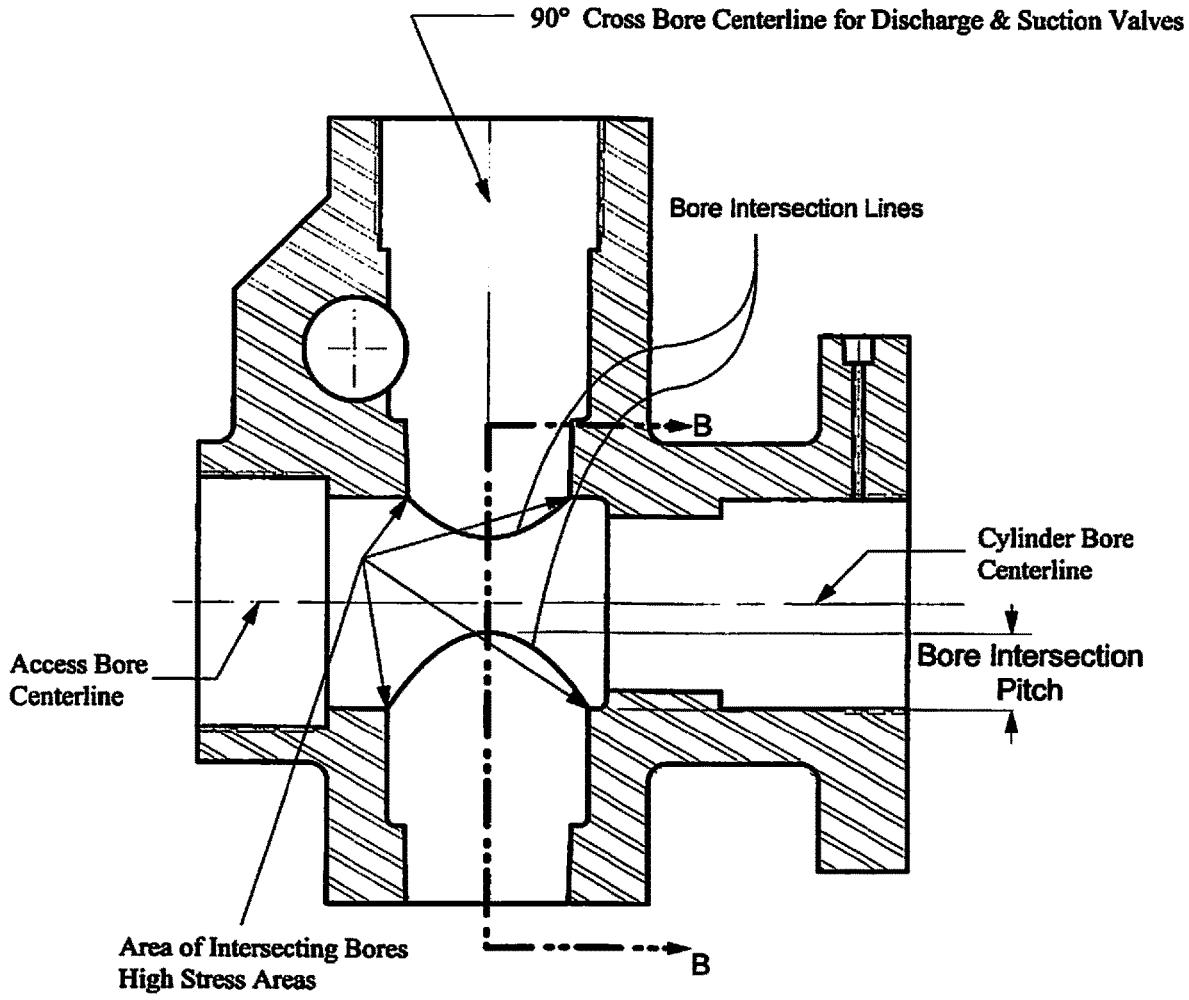

Prior Art

Figure 3A

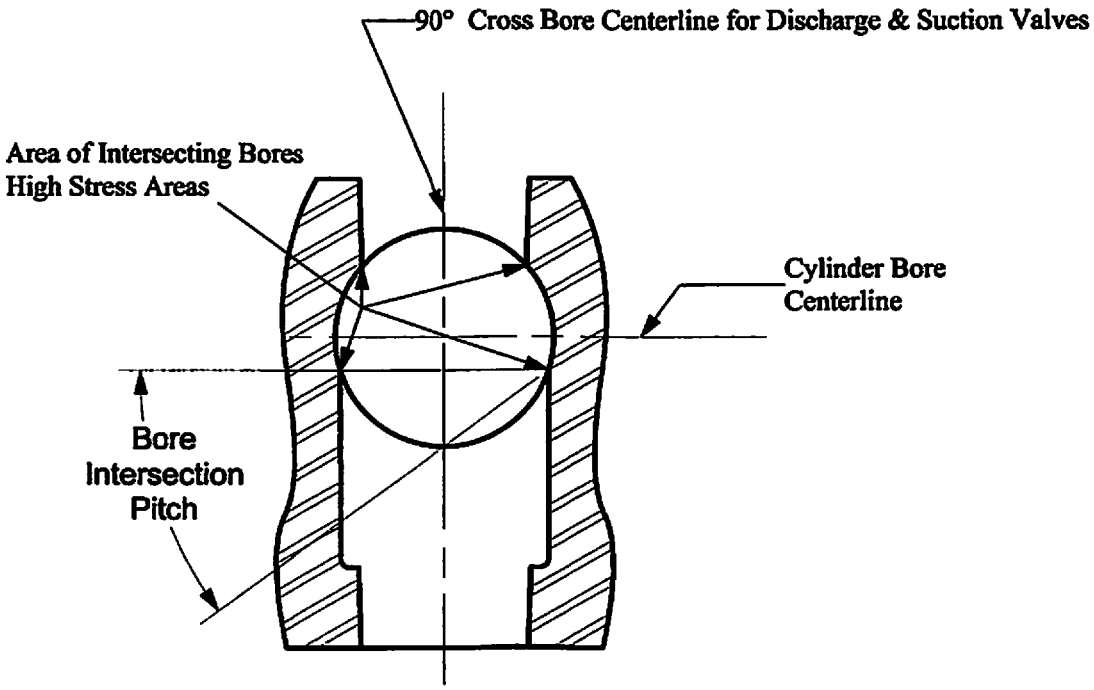

Section "B-B" of Figure 3A

Figure 3B

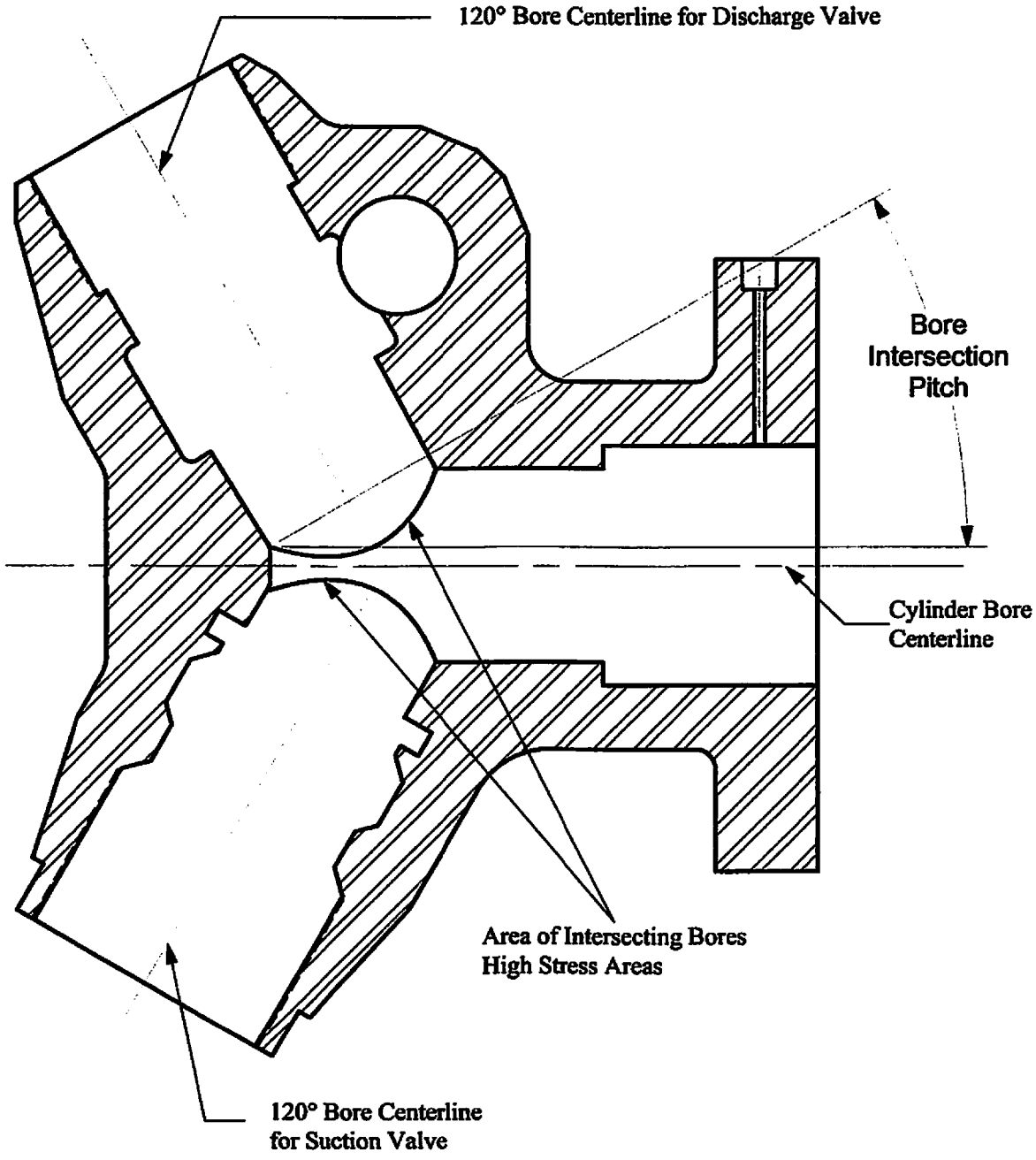

Prior Art

Figure 4A

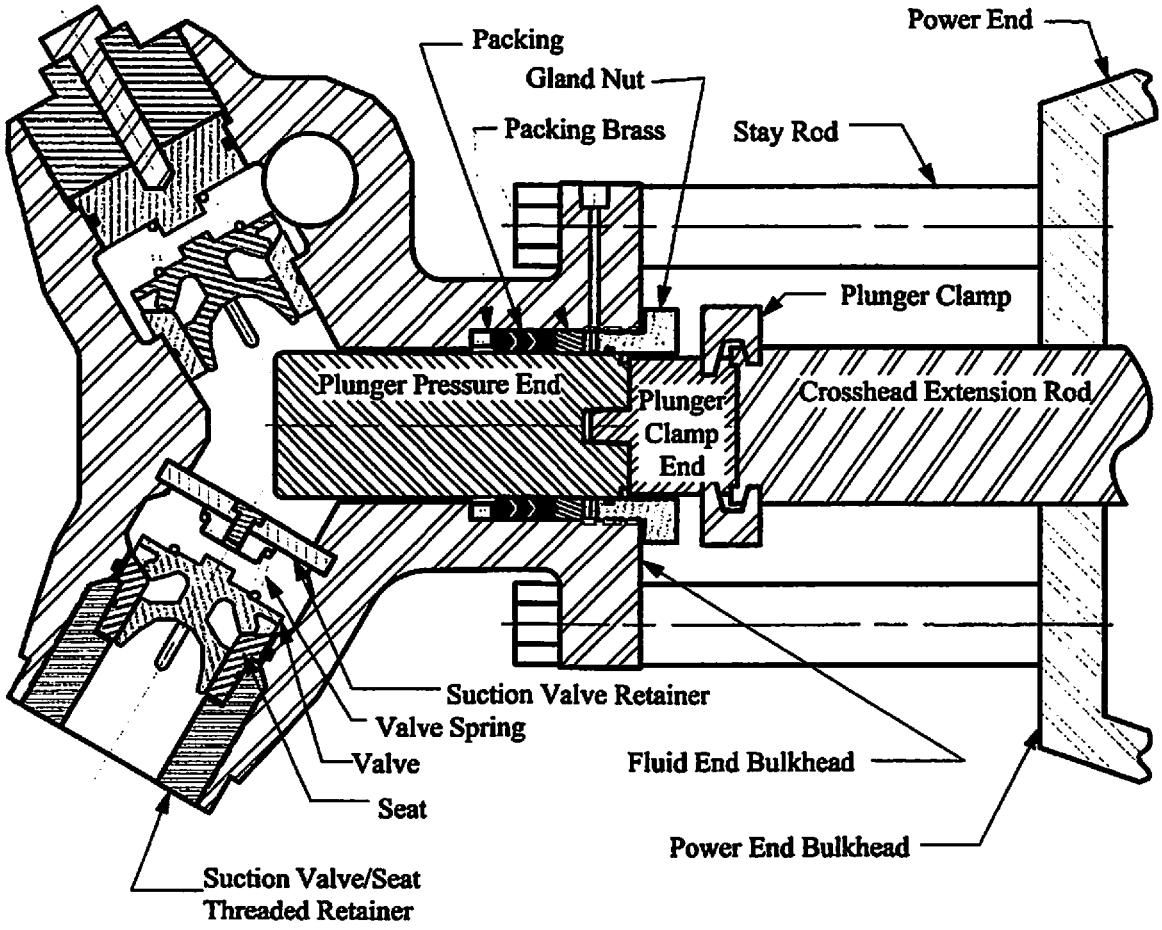

Prior Art

Figure 4B

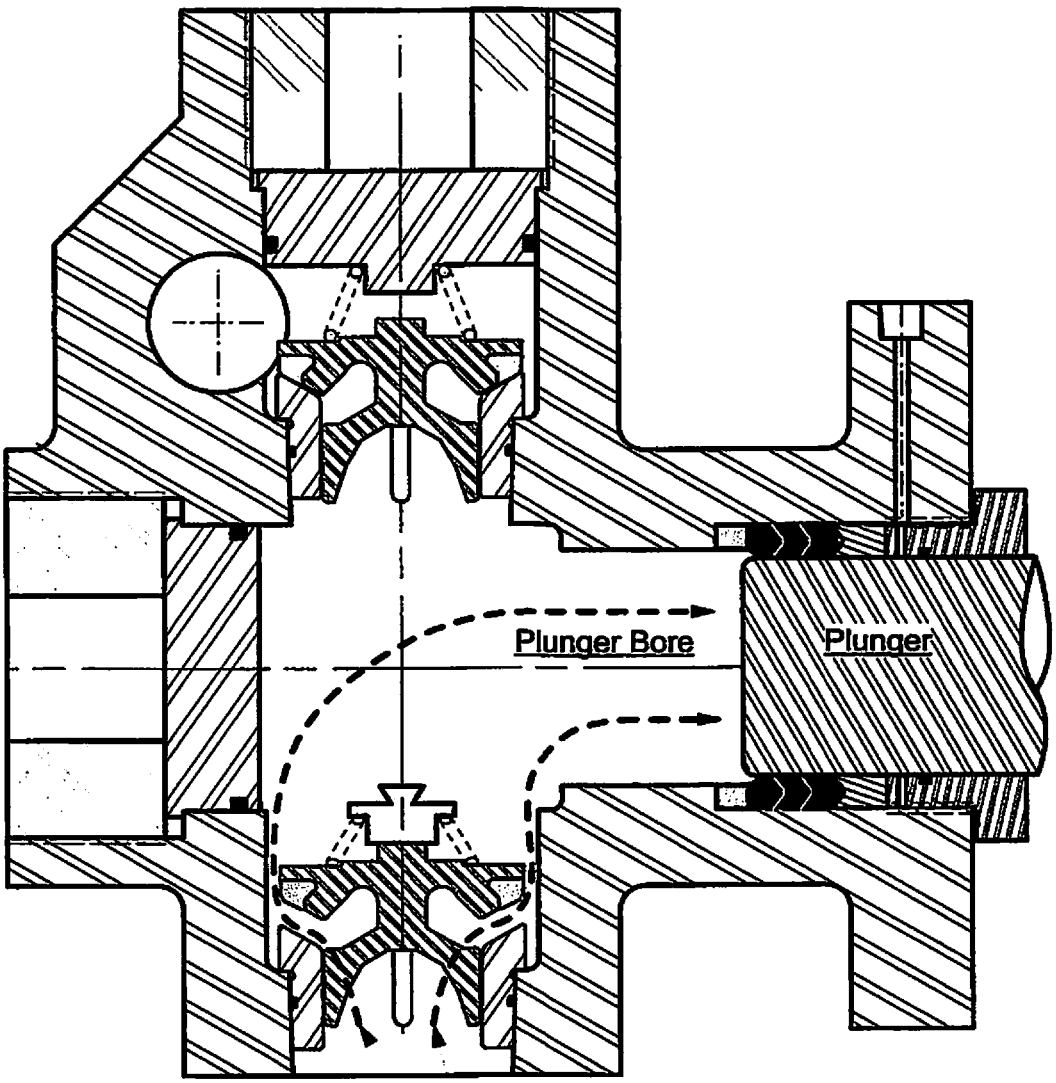

Typical Fluid Flow, Suction Stroke

Prior Art

Figure 5

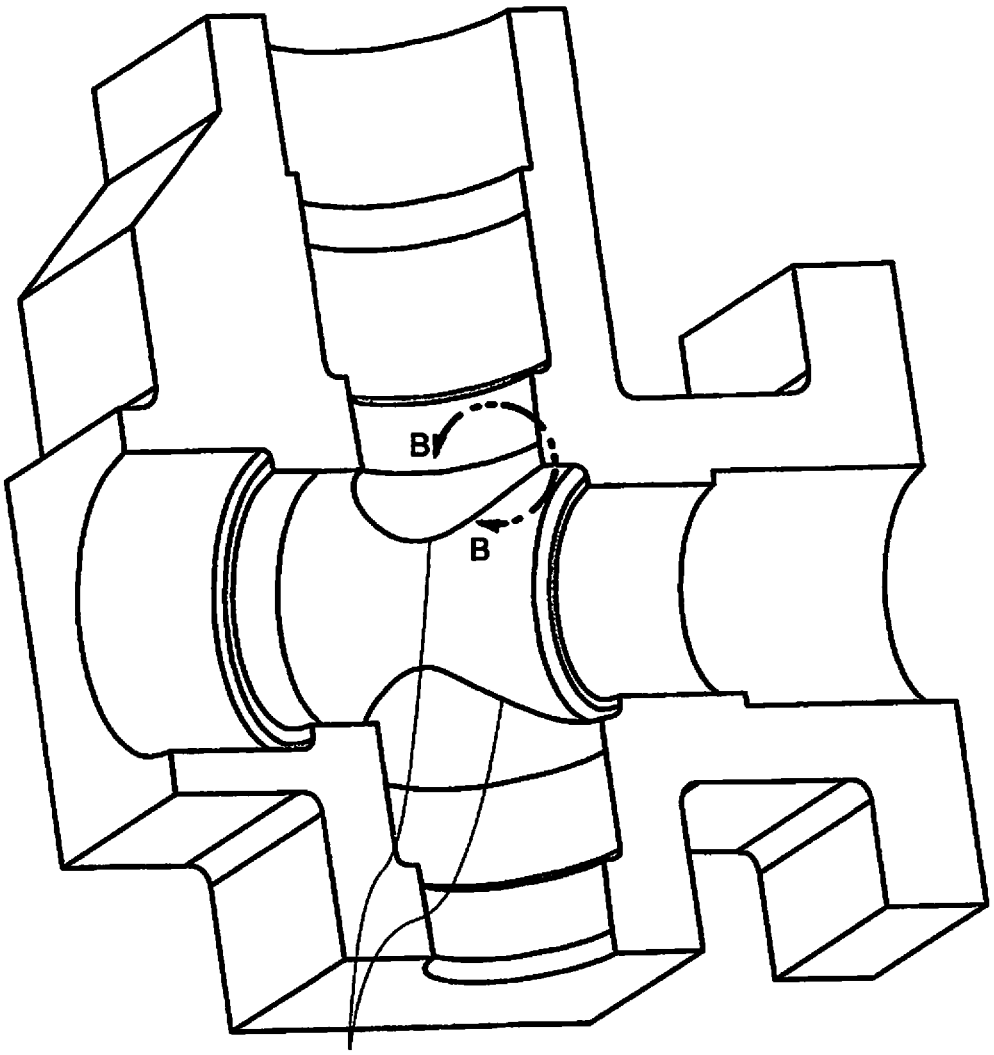

Figure 6A

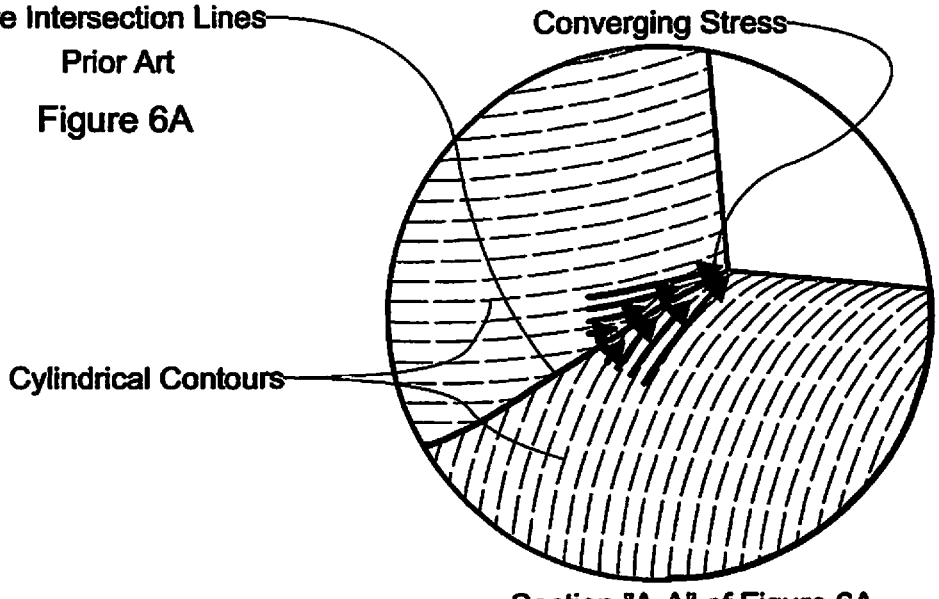

Section "A-A" of Figure 6A

Figure 6B

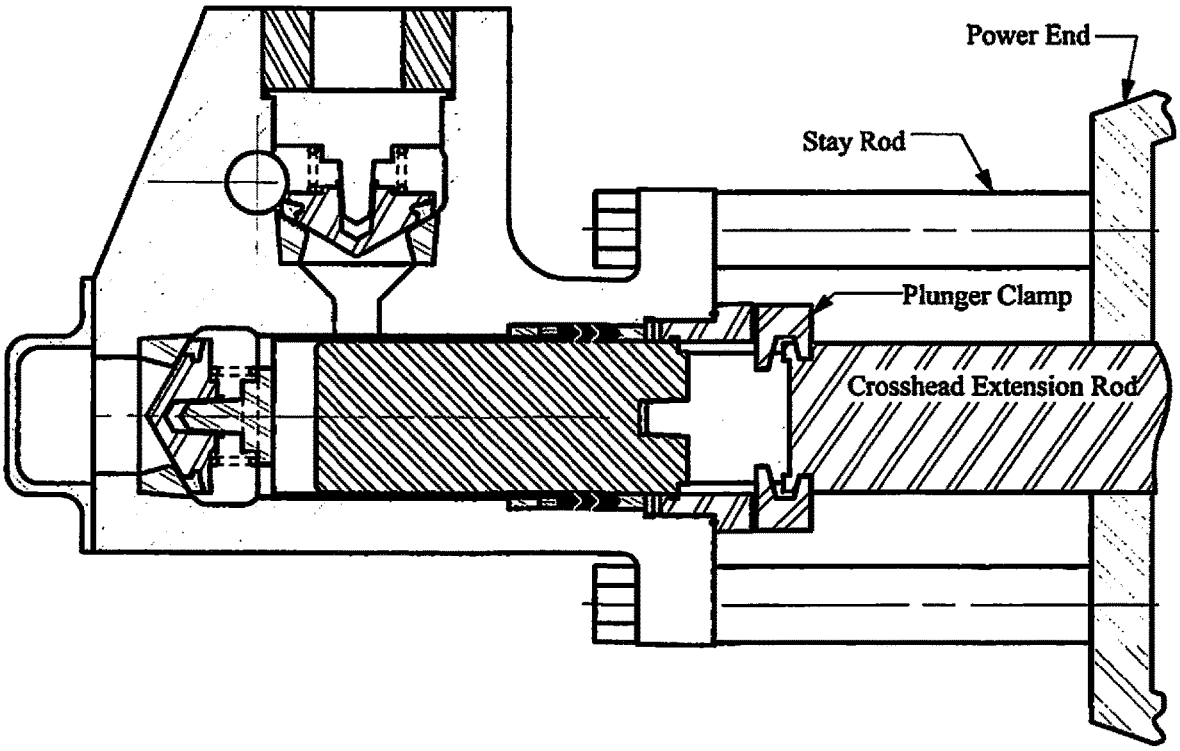

Prior Art

USPTO Application Number: 15/330,213

Figure 7

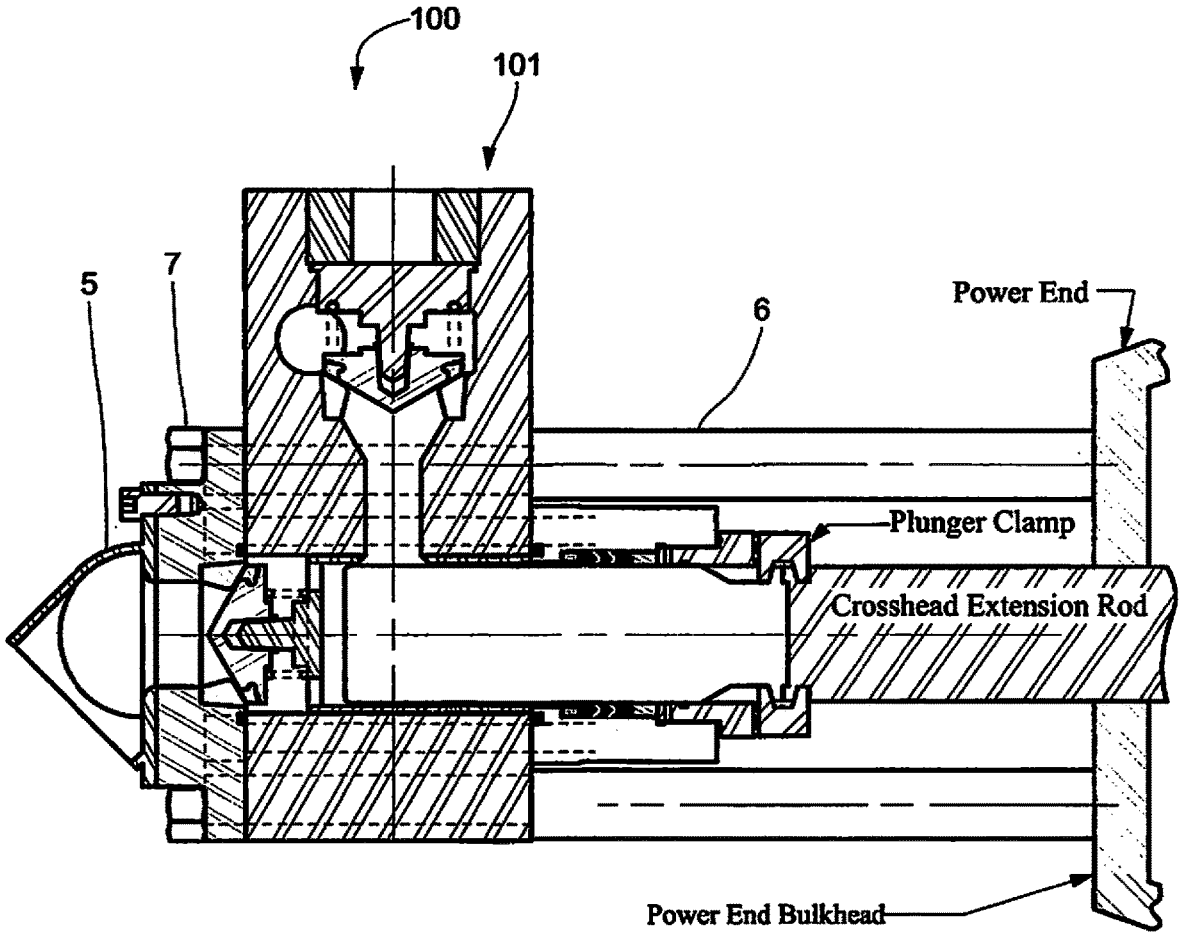
100
101
5
7
6
Power End
Plunger Clamp
Crosshead Extension Rod
Power End Bulkhead

Figure 8

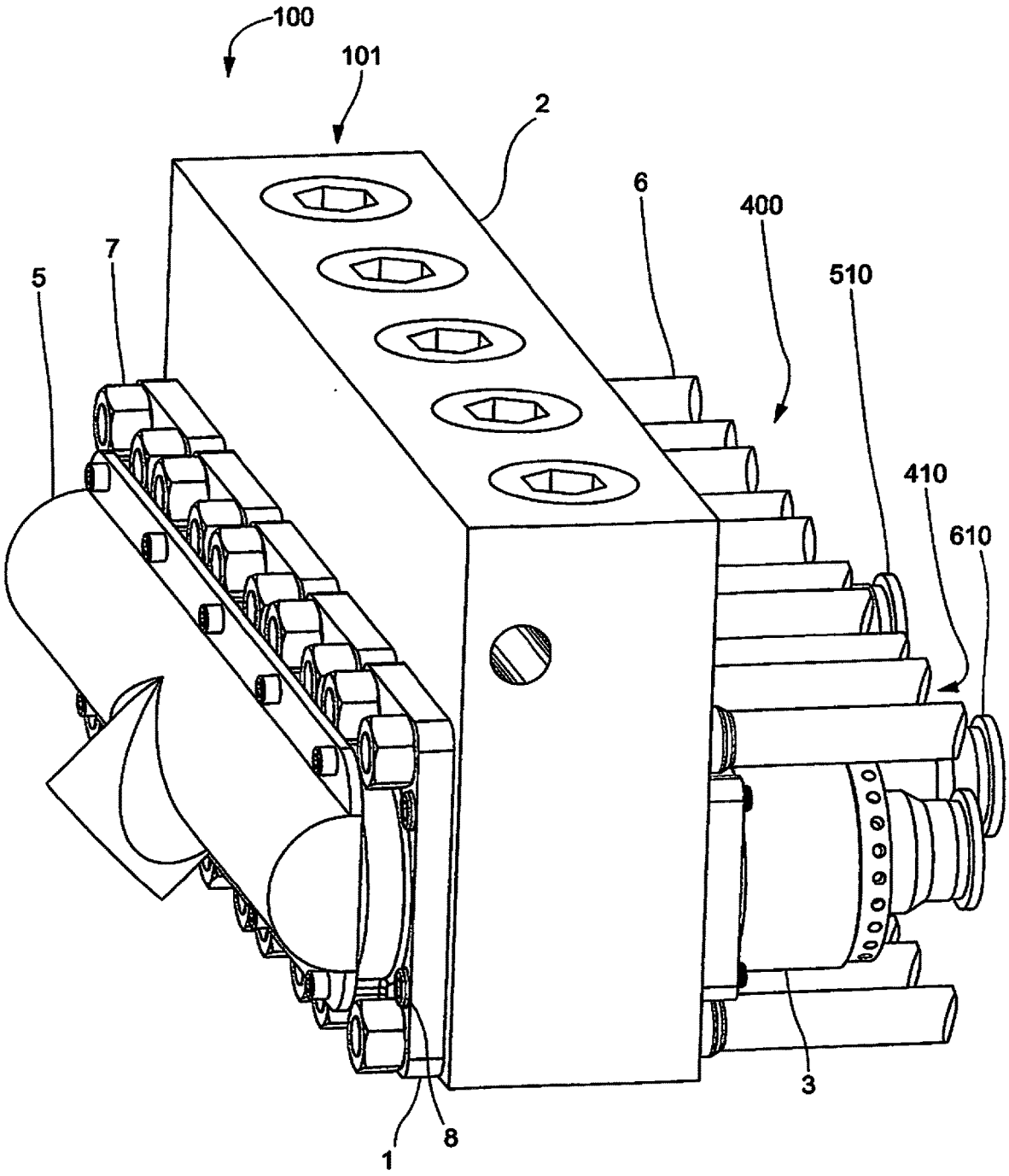

Figure 9

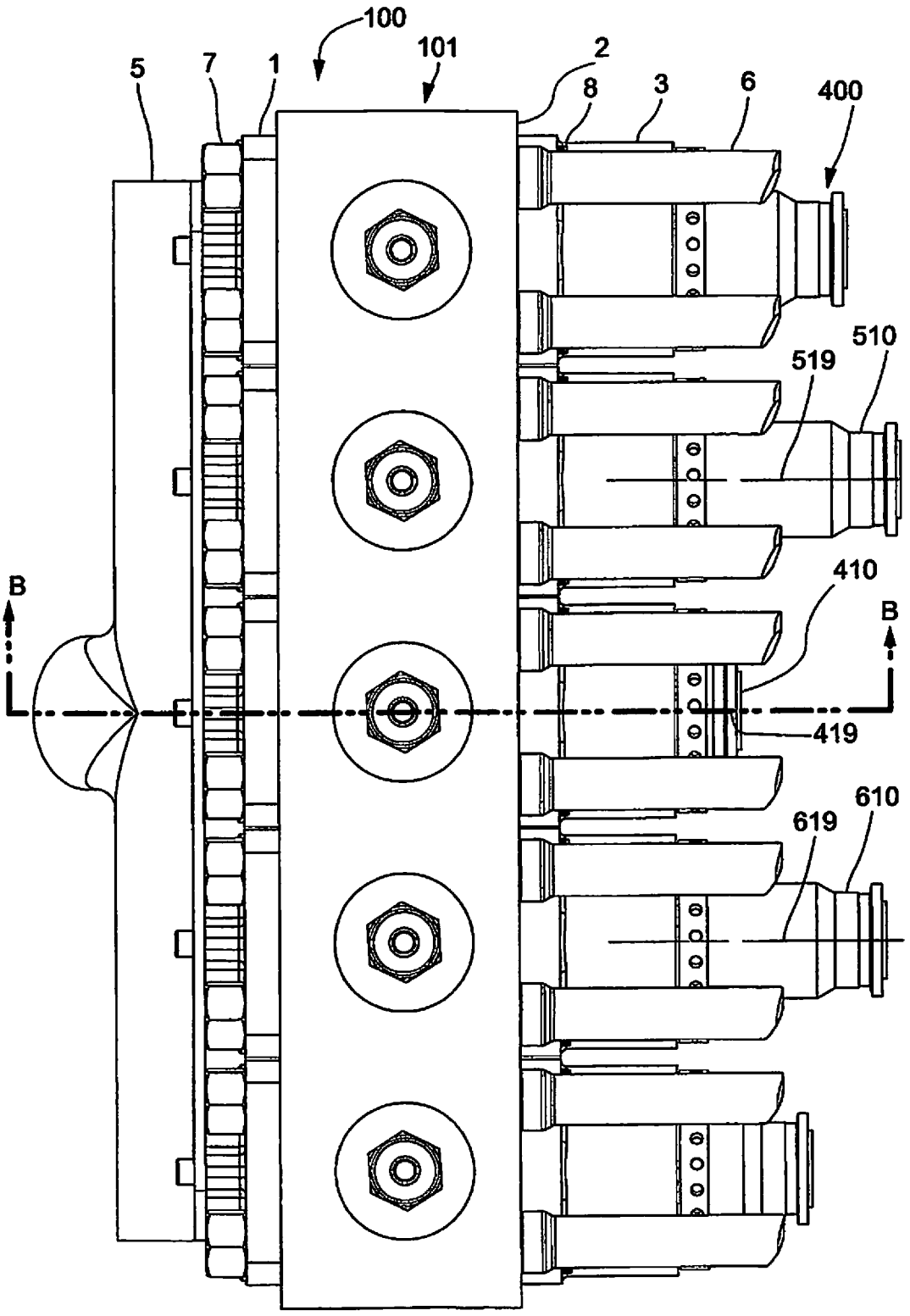

Figure 10A

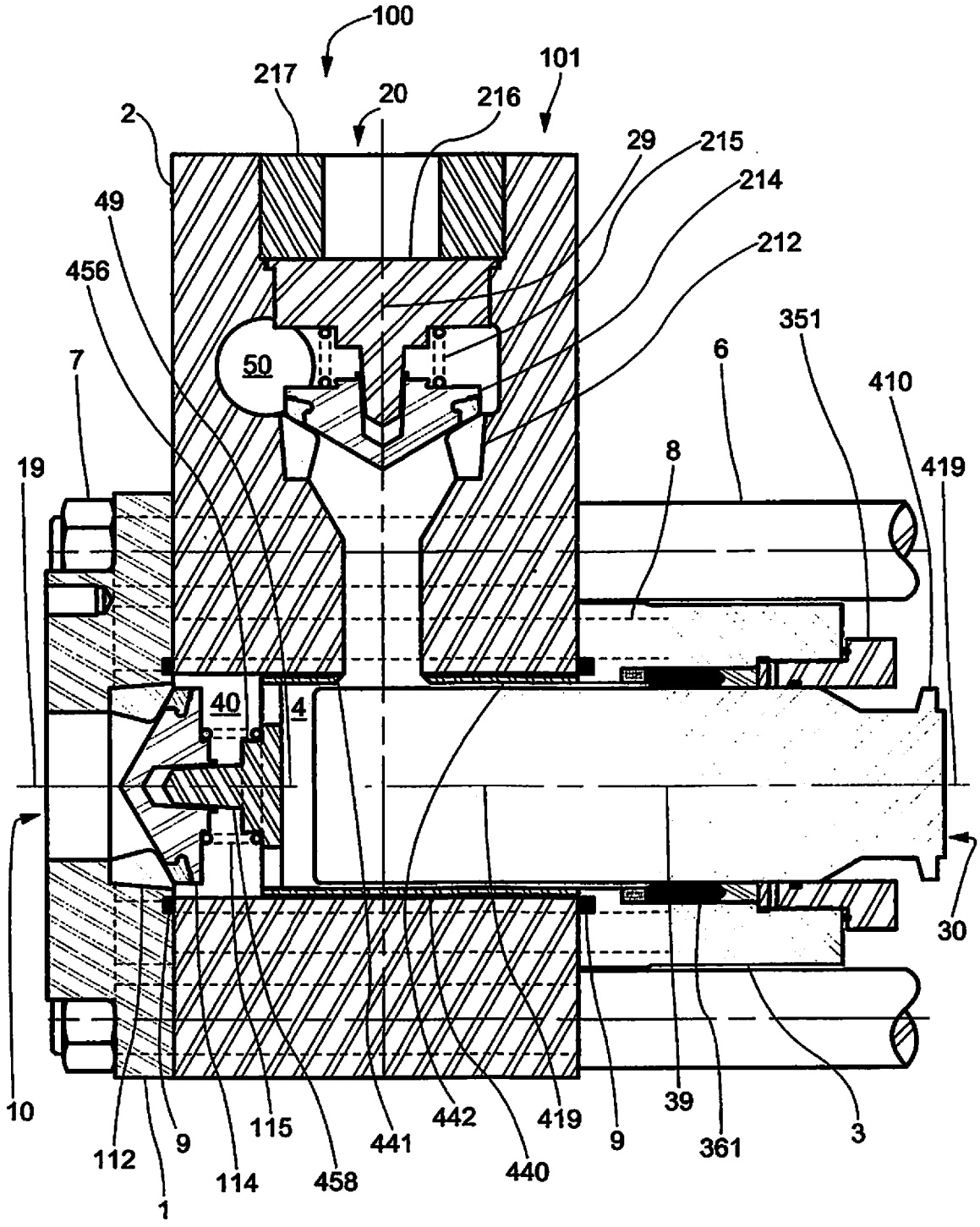
100
101
217
20
216
2
29
215
214
49
212
456
351
6
7
50
410
19
8
419
40
4
30
10
112
9
115
441
442
419
9
39
3
114
458
440
361
1

Figure 10B

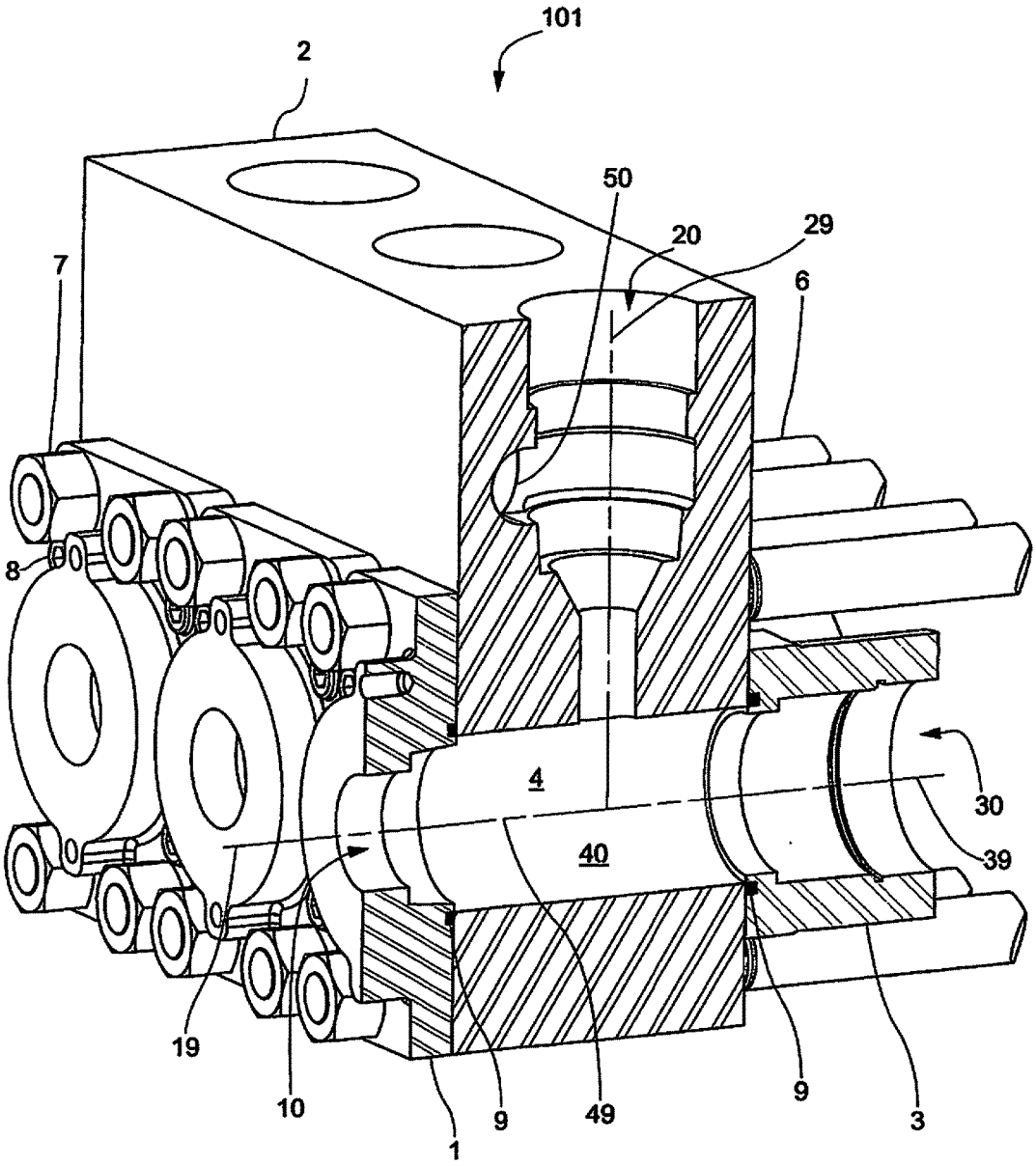

Figure 11

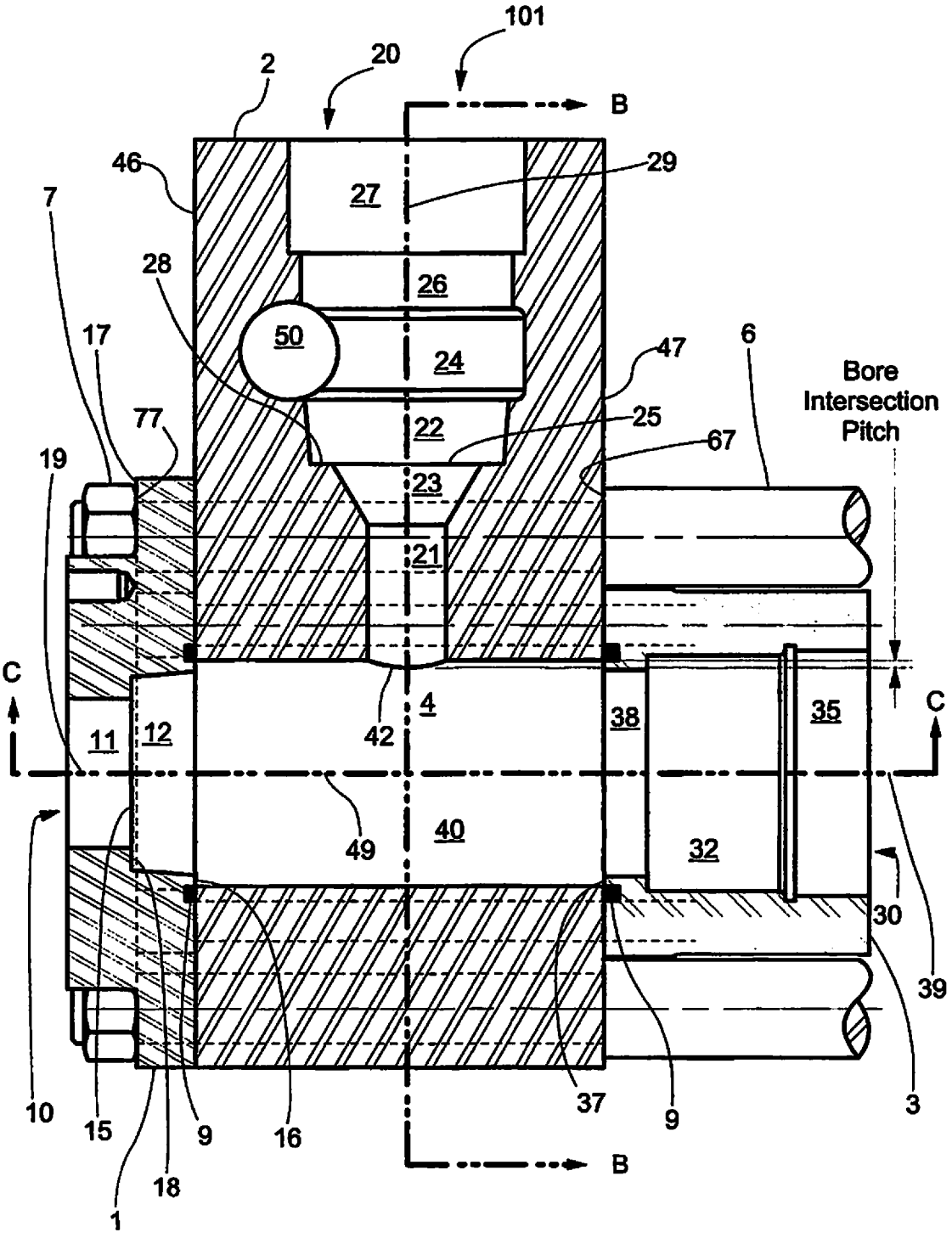
101
2
20
B
46
29
27
7
28
26
50
24
47
6
Bore
Intersection
Pitch
17
77
25
67
19
22
23
21
C
4
38
35
C
11
12
42
49
40
32
30
39
10
15
9
16
37
9
3
18
1
B

Figure 12A

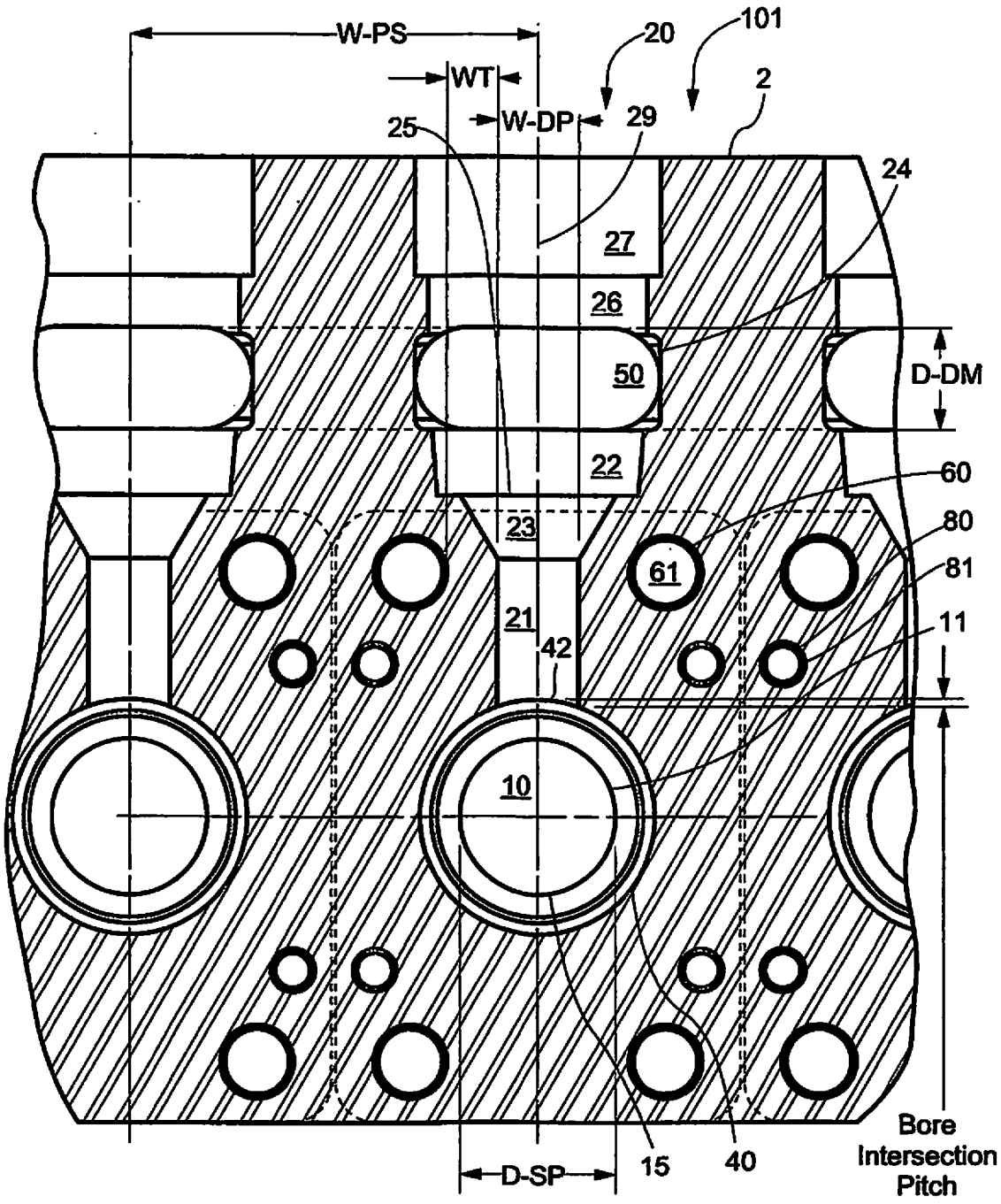

Section "B-B" of Figure 12A

Figure 12B

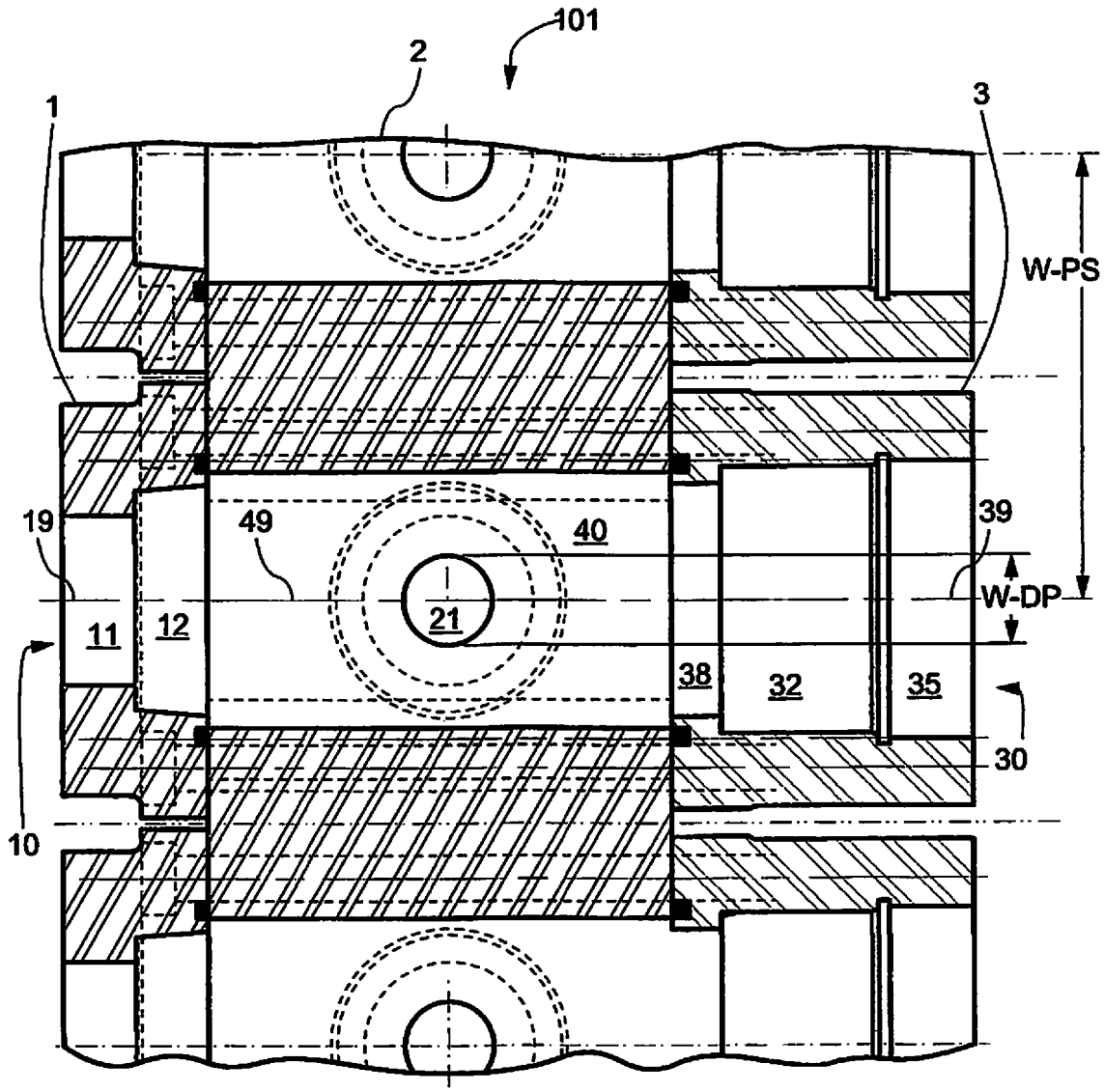

Section "C-C" of Figure 12A

Figure 12C

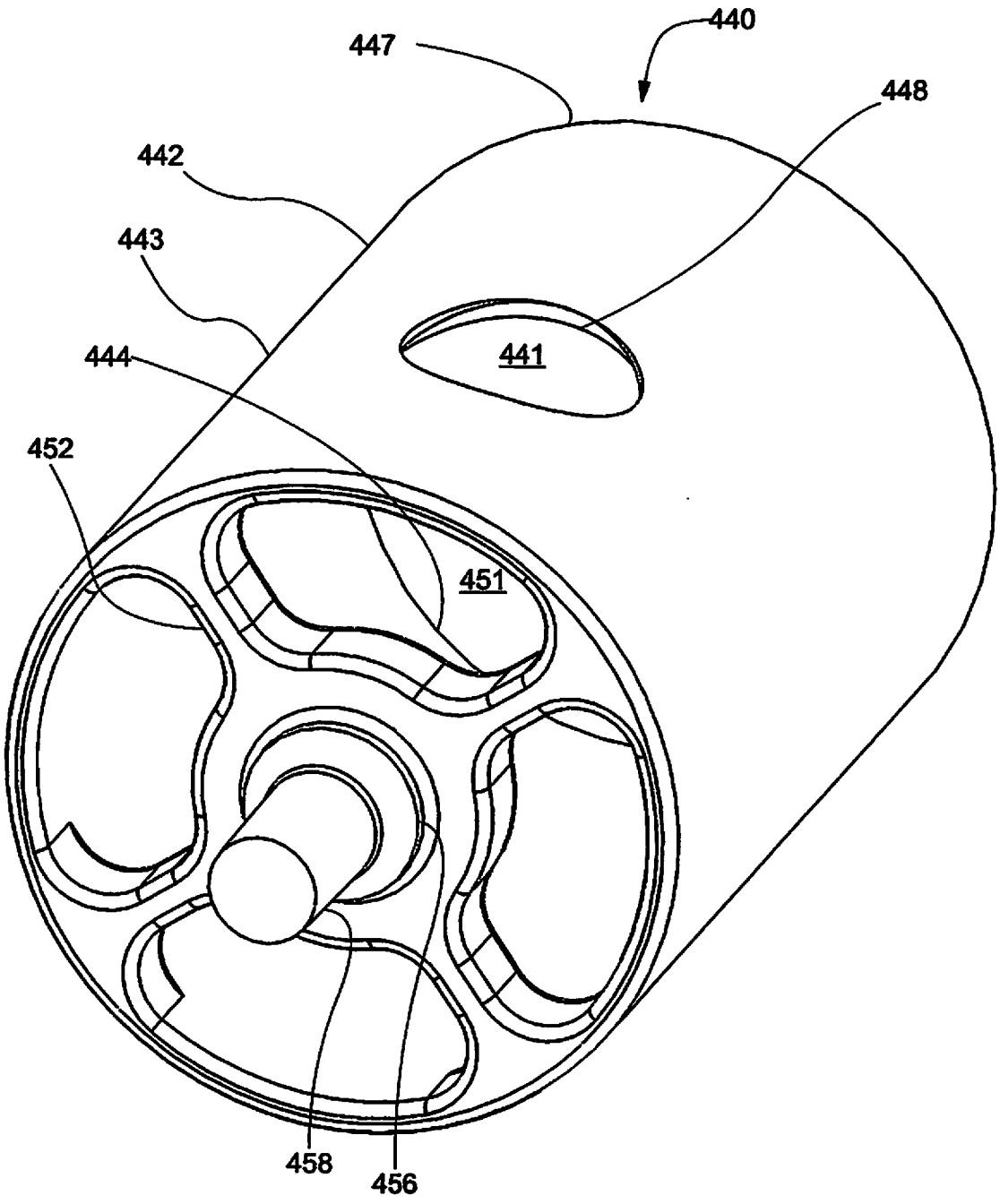

Figure 13A

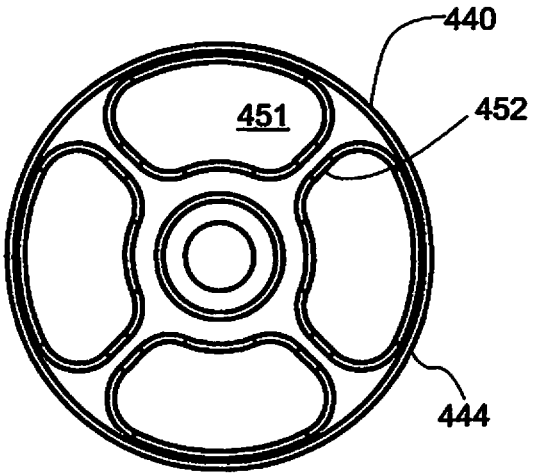

Figure 13B

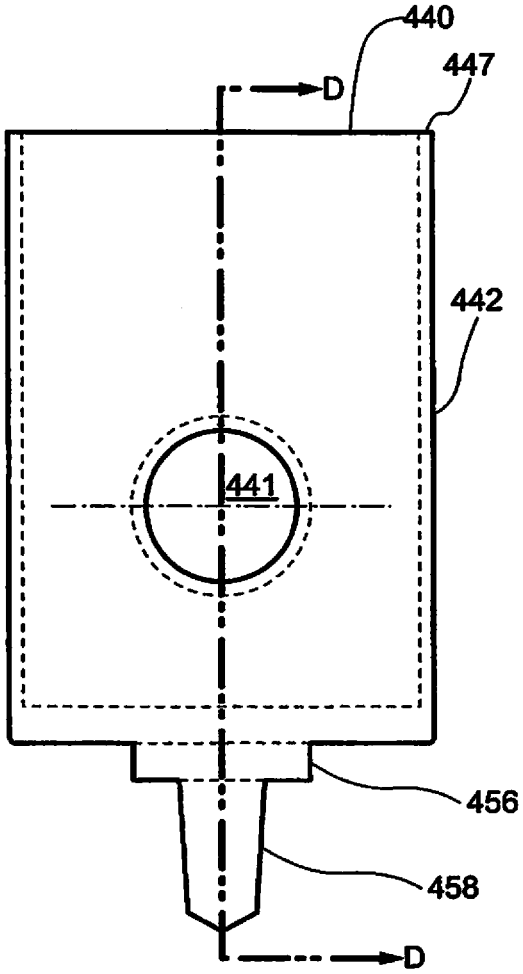

Figure 13C

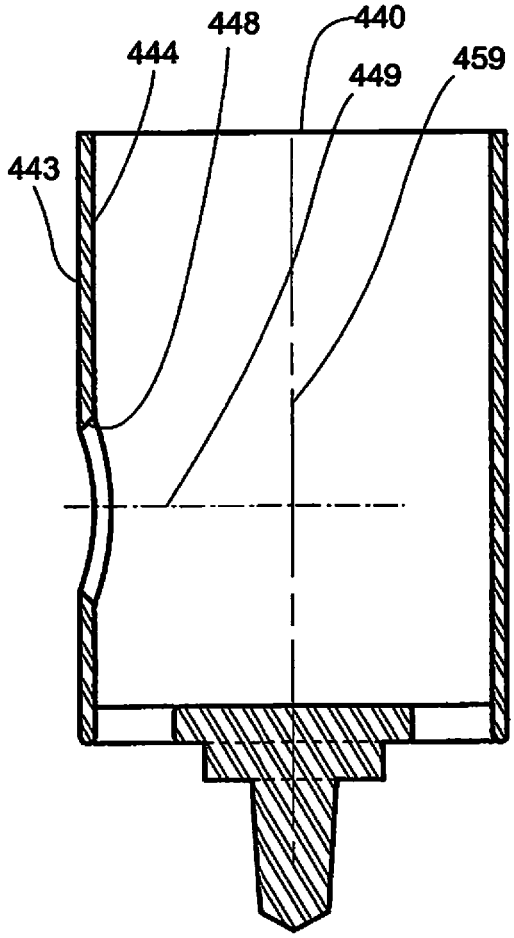

Section "D-D" of Figure 13C

Figure 13D

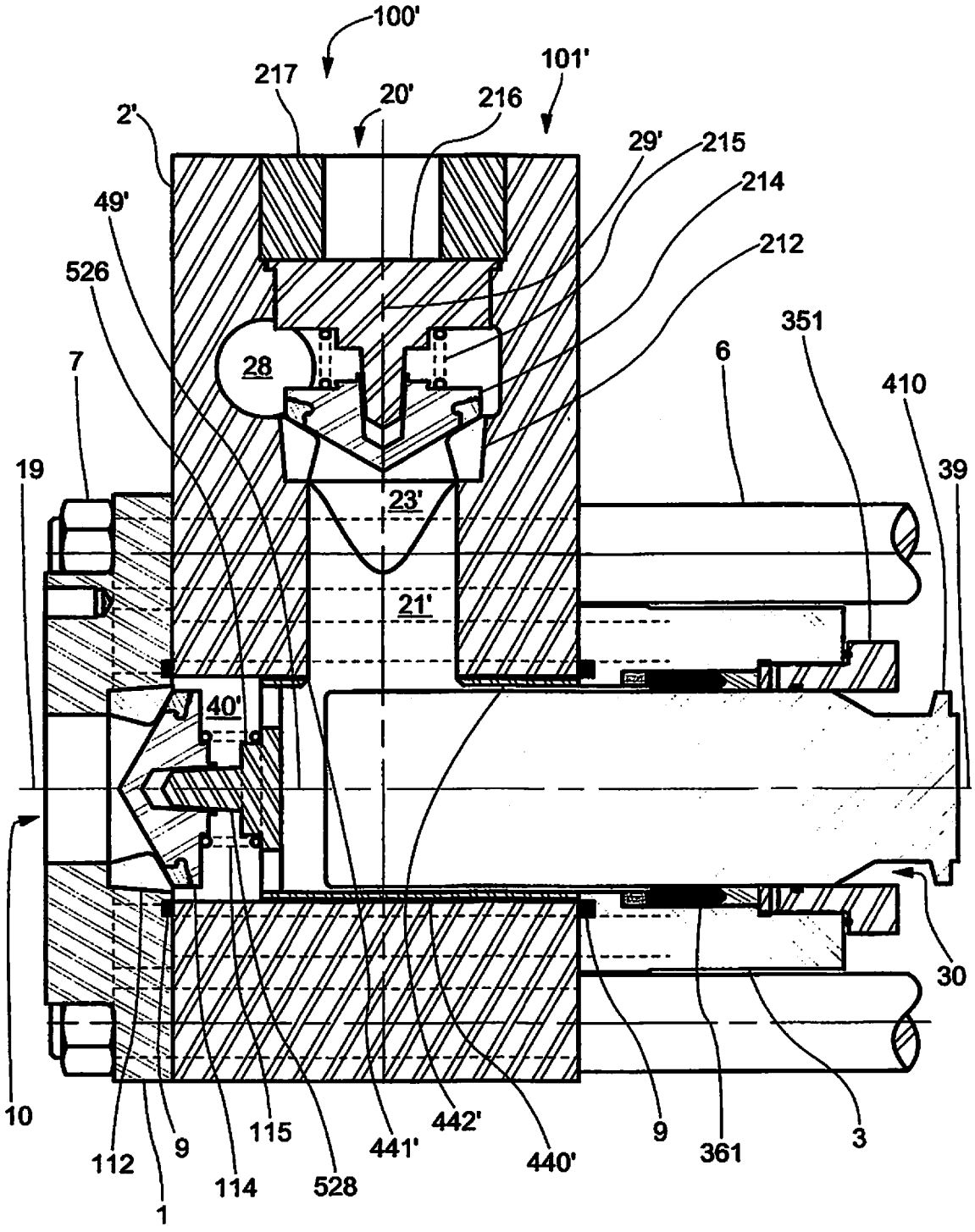
100'
101'
217
20'
216
2'
29'
215
214
49'
212
526
351
6
7
28
410
19
39
23'
21'
40'
30
10
112
9
115
441'
442'
440'
9
361
3
114
528
1

Figure 14

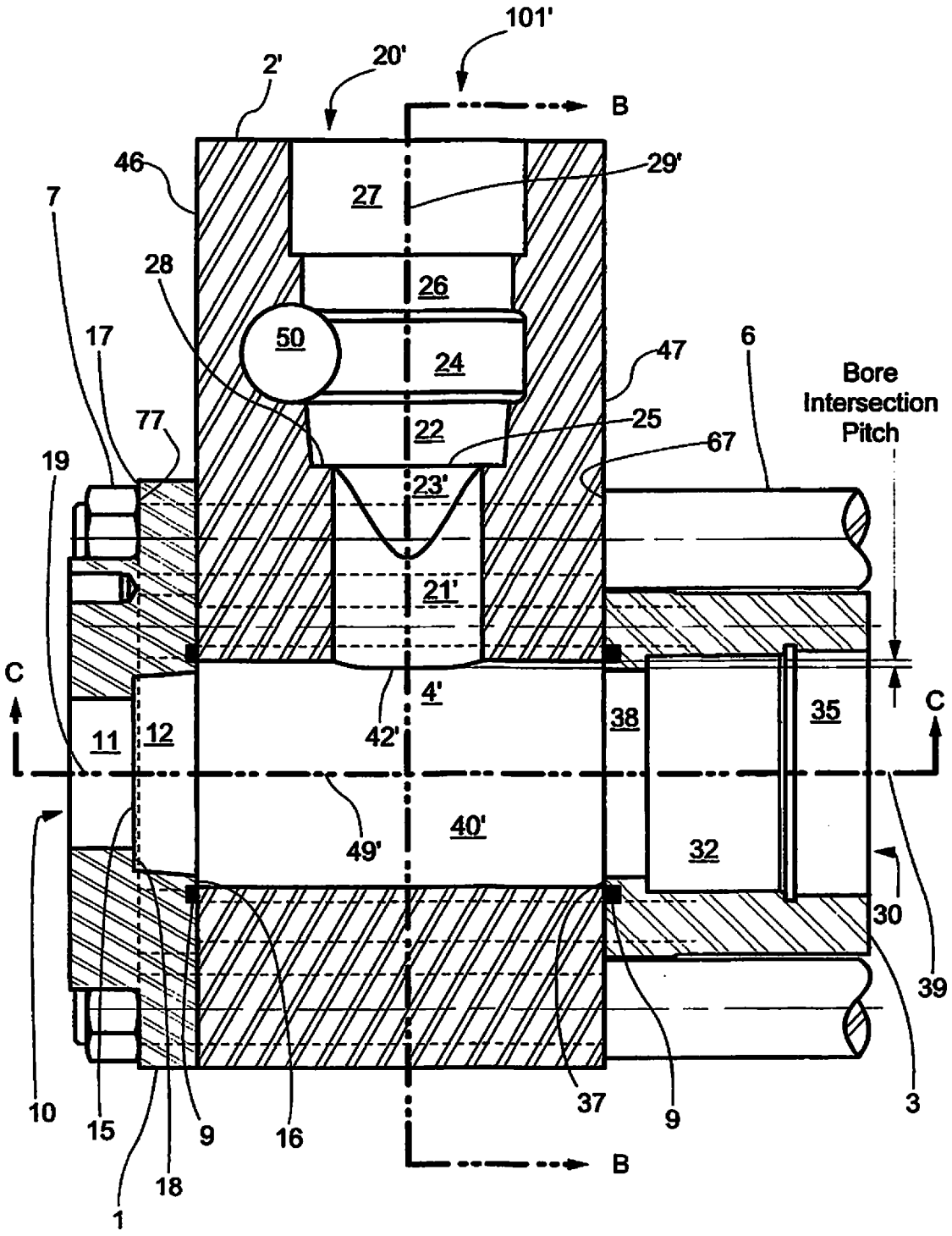
101'
2'
20'
B
46
29'
27
7
28
26
50
24
47
6
Bore
Intersection
Pitch
17
77
25
22
67
19
23'
21'
C
4'
42'
38
35
C
11
12
40'
49'
32
30
39
10
15
9
16
37
9
3
18
1
B

Figure 15A

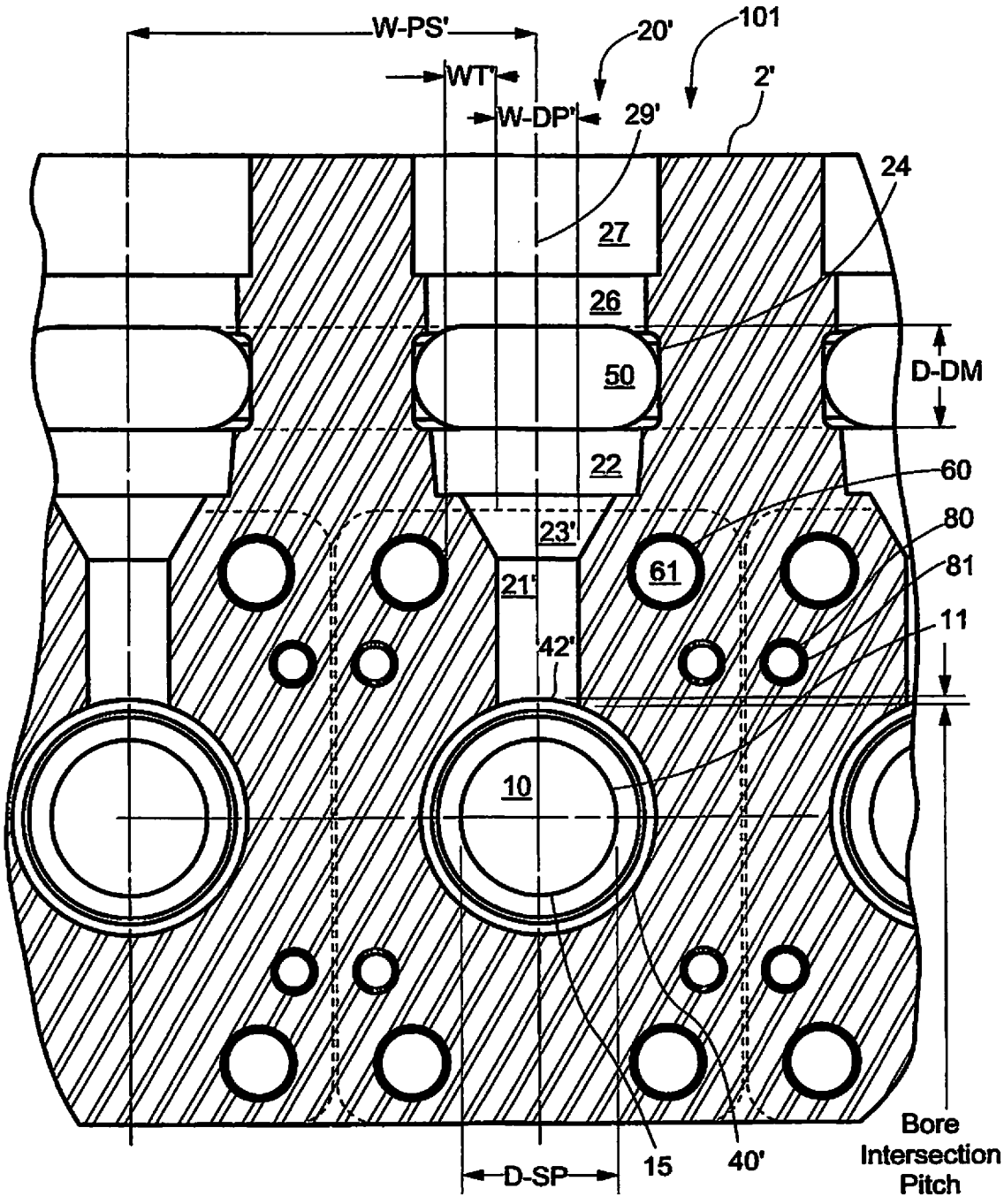

Section "B-B" of Figure 15A

Figure 15B

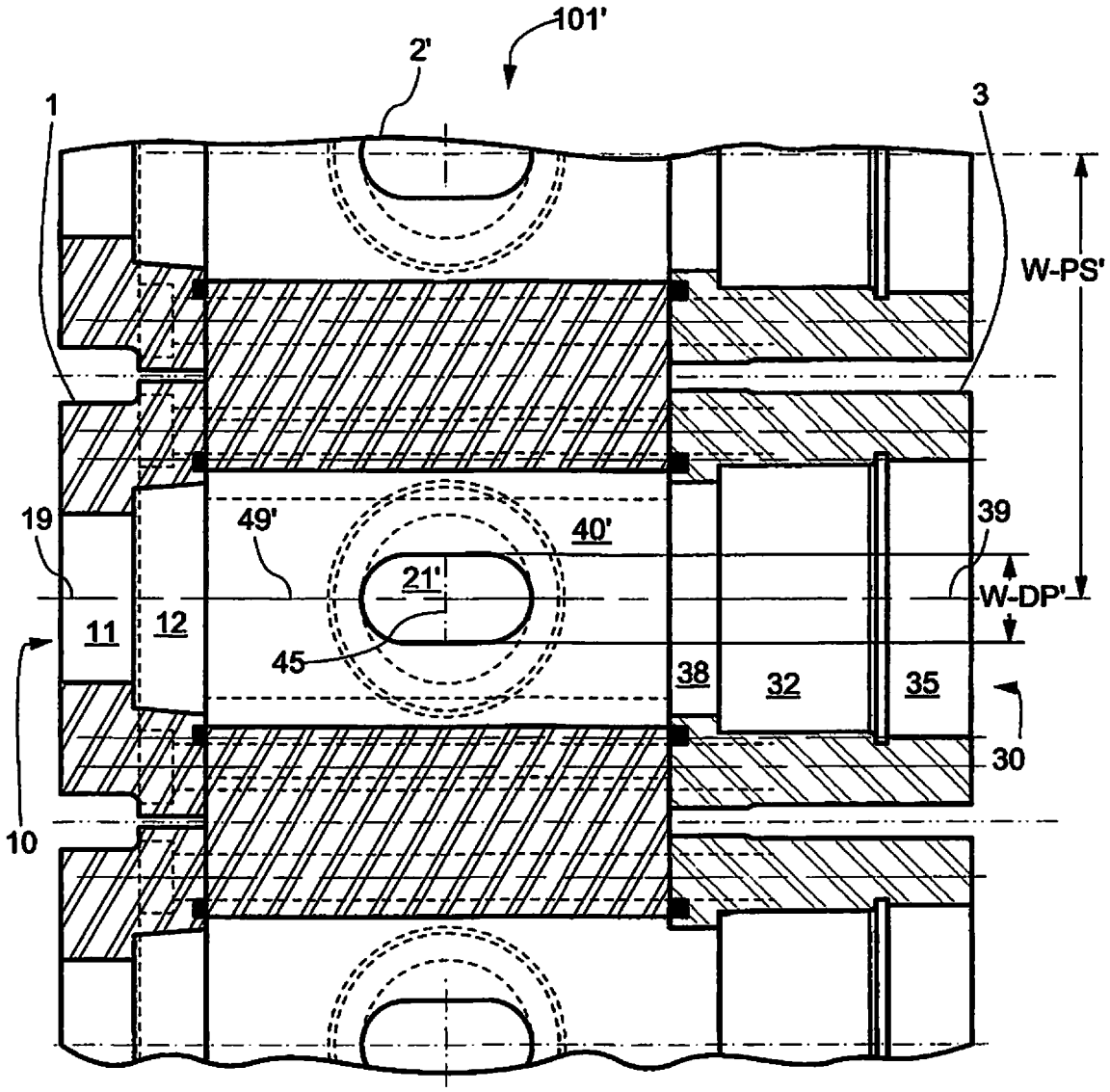

Section "C-C" of Figure 15A

Figure 15C

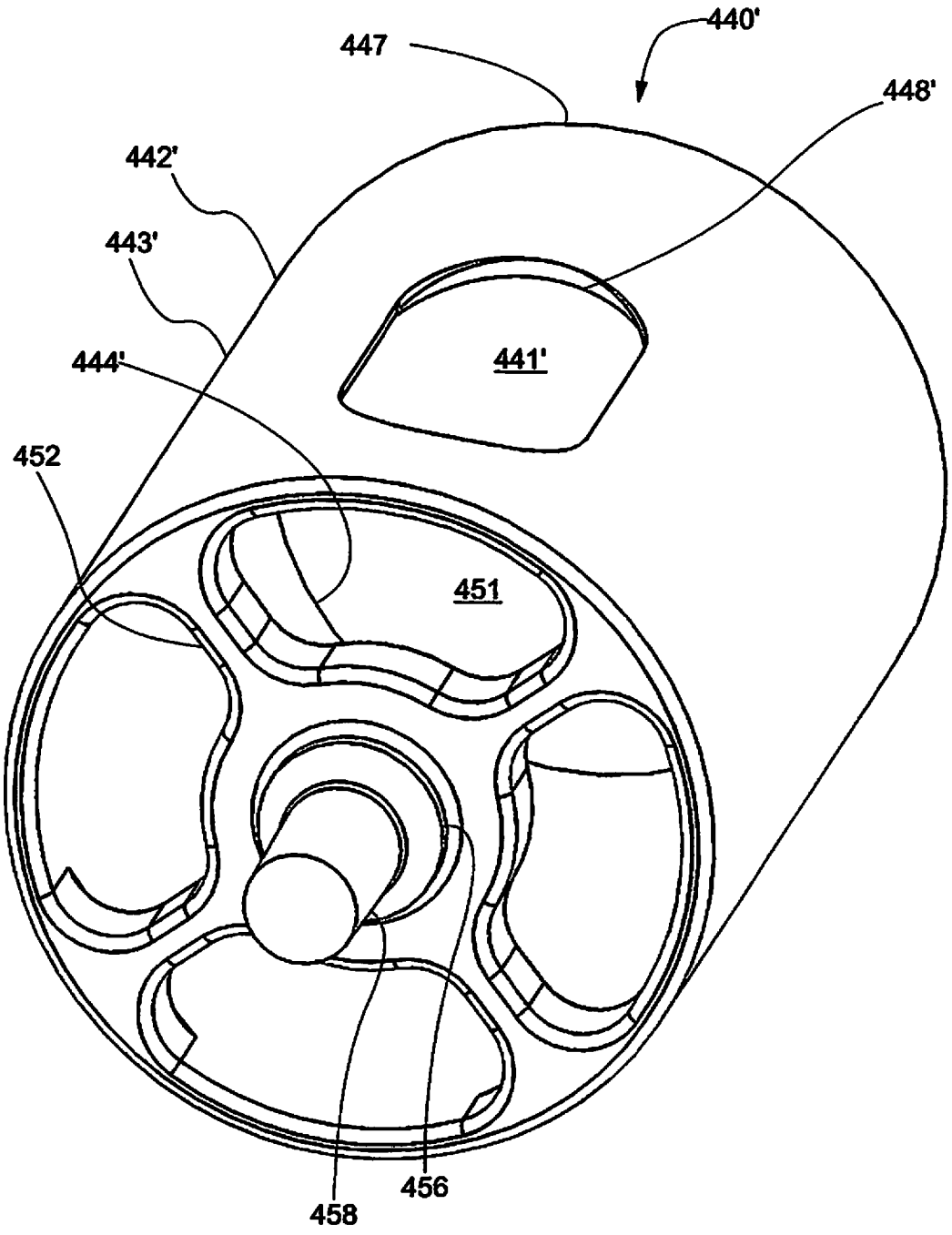

Figure 16A

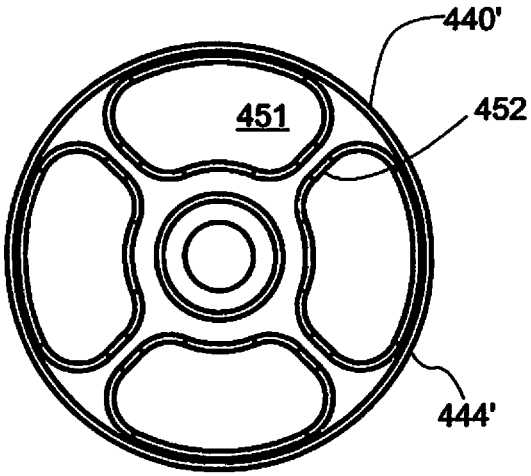

Figure 16B

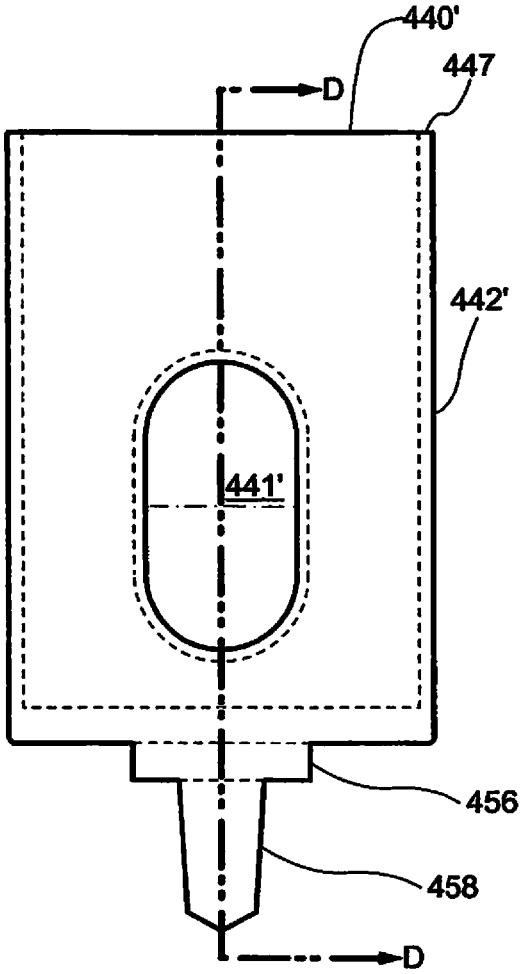

Figure 16C

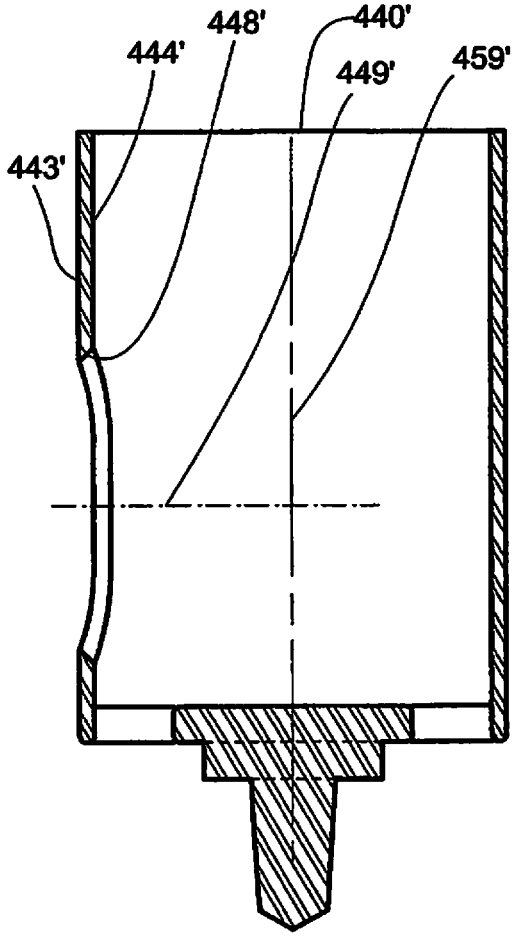

Section "D-D" of Figure 16C

Figure 16D

PUMP WITH SEGMENTED FLUID END HOUSING AND IN-LINE SUCTION VALVE

PRIORITY DATA

[0001] This patent application is a Divisional of, and claims priority to, U.S. Non-Provisional patent application Ser. No. 15/732,441, filed on Nov. 13, 2017. This patent application further claims priority to U.S. Non-Provisional patent application Ser. No. 15/330,213, filed on Aug. 23, 2016, and also claims priority to U.S. Non-Provisional patent application Ser. No. 15/330,212, filed on Aug. 23, 2016. Each of the aforementioned patent applications, by this reference, are incorporated herein for all purposes.

FIELD OF THE INVENTION

[0002] The invention relates generally to high-pressure plunger pumps used, for example, in oil field operations. More particularly, the invention relates to a modular fluid end design with an internal bore configuration that improves flow, improves fluid end filling, and incorporates structural features for stress-relief in high-pressure plunger pumps.

BACKGROUND

[0003] Engineers typically design high-pressure oil field plunger pumps in two sections: the (proximal) power section and the (distal) fluid section. The power section usually comprises a crankshaft, reduction gears, bearings, connecting rods, crossheads, crosshead extension rods, etc. Power and fluid sections are commonly referred to in the industry, and hereafter in the application, as the power end and fluid end, respectively. Fluid ends usually comprise a plunger pump fluid end housing with multiple internal cavities or fluid chambers, each chamber having a suction valve in a suction bore, a discharge valve in a discharge bore, and a plunger in a plunger bore, plus high-pressure seals, retainers, etc. FIG. **1** is a cross-sectional schematic view of a typical fluid end housing showing its connection to a power end by stay rods. A plurality of fluid chambers similar to that illustrated in FIG. **1** may be combined, as suggested in the Triplex fluid end housing comprising three (3) fluid chambers is schematically illustrated in FIG. **2**. A pump with five (5) fluid chambers or 5 plungers is referred to as a quintuplex pump.

[0004] Valve terminology varies according to the industry, e.g., pipeline or oil field service, in which the valve is used. In some applications, the term "valve" means just the moving element or valve body. In the present application, however, the term "valve" includes other components in addition to the valve body, e.g., various valve guides to control the motion of the valve body, the valve seat, and/or one or more valve springs that tend to hold the valve closed, with the valve body reversibly sealed against the valve seat.

[0005] Valve and seat sizing design is a compromise between competing objectives in fluid end design. Traditionally engineers have wanted to use suction valve and seat designs of as a large a size as possible, as the larger the flow area in the valve and seat, the lesser the flow restriction. Flow restrictions reduce fluid energy which hinders the complete filling of the fluid chamber and the volumetric efficiency of the pump. Incomplete filling of the fluid chamber can cause a rough running pump. Additionally, larger valve and seat sizes reduce fluid velocity through the valve and seats. High fluid velocity contributes to erosion damage of the valve seal and leads to premature seal failure of the valve. For additional detail on valve erosion damage read the teaching of U.S. Pat. No. 9,416,887. The disadvantage of larger valve and seat sizes is the greater the size and weight of the fluid end housing necessary to contain the larger size valve and seat. Larger valve and seat sizes also result in higher valve loads and higher stresses on the fluid end housing which can result in premature structural failure of the housing. In rare instances in the prior art, suction valves and seats were slightly larger than discharge valves and seats. The theoretical reason for this sizing was based on the belief that greater flow area was necessary in the suction valves and seats to reduce flow restrictions than comprised fluid energy in filling the fluid chamber on the suction stroke. Further, many designers observed that the fluid in the discharge stroke inherited great fluid energy from the applied power of the moving plunger and thus smaller valve and seat sizing could be applied to the discharge valves and seats. This reasoning ignores the requirement to reduce fluid velocity in both sets of valves and seats to prevent erosion damage and premature failure to valve seals.

[0006] Similarly in the prior art, the suction port and discharge were almost always maximized to reduce flow restrictions. The suction port and discharge port are the volumetric bores directly upstream and feeding the suction valve/seat and discharge valve/seat, respectively. The respective bore of these respective ports would typically be maximized by boring the port to the small diameter of the taper in the fluid end housing utilized in capturing and securing the suction or discharge seat. This design practice was justified in the suction port because of the need to preserve fluid energy by reducing flow restrictions. By default, the same practice was utilized for the discharge port. As will be discussed later in this application, a large discharge port is not warranted.

[0007] Each individual bore in a plunger pump fluid end housing is subject to fatigue due to alternating high and low pressures which occur with each stroke of the plunger cycle. Conventional fluid end housings, also referred to as Cross-Bore blocks, typically fail due to fatigue cracks in one of the areas defined by the intersecting suction, plunger, access and discharge bores as schematically illustrated in FIGS. **3**A and **3**B.

[0008] To reduce the likelihood of fatigue cracking in the high-pressure plunger pump fluid end housings described above, a Y-block housing design has been proposed. The Y-block housing design, which is schematically illustrated in FIG. **4**A, reduces stress concentrations in a plunger pump housing, such as that shown in FIG. **3**A, by increasing the angles of bore intersections above 90°. In the illustrated example of FIG. **4**A, the bore intersection angles are approximately 120°. A more complete cross-sectional view of a Y-block plunger pump fluid end housing and the assembly components is schematically illustrated in FIG. **4**B.

[0009] Both cross-bore blocks and Y-blocks have several major disadvantages when used to pump heavy slurry fluids as typically utilized in oilfield fracturing service. A first disadvantage is related to the feeding of the fluid chamber on the suction stroke of the pump. Upon passing through the suction valve, the fluid must make a 90 degree turn in a cross-bore housing, or a 60 degree turn in a Y-block housing, into the plunger bore as illustrated in FIG. **5**. This change in

the direction of the heavy fluid robs the fluid of kinetic energy, hereafter referred to as fluid energy.

[0010] Fluid energy is normally added to the fluid by small supercharging pumps upstream from the plunger pump. Fluid energy is necessary to overcome fluid inertia and ensure complete filling of the fluid chamber on the suction stroke. If the fluid could enter the fluid chamber in a linear or straight path, less fluid energy would be lost.

[0011] The second disadvantage of Cross-Bore blocks and Y-blocks relates to the large intersecting curved areas where the various bores intersect. Because the suction bore above the suction valve is almost as large as the plunger bore, the intersection area of the suction bore with the plunger bore is particularly large, as illustrated in FIGS. **3**A and **3**B. While the intersection of the suction bore and the plunger bore is especially large, the intersection of the discharge bore and the plunger bore is almost as large.

[0012] As shown in FIGS. **6**A and **6**B, the intersecting cylindrical sections result in intersection curves that focus or concentrate the stresses generated by the internal pump pressures into a very small area. This small area is located at the bore intersection near the plane formed by the centerline axis of the plunger and suction or discharge bore cylinders at the finite point of the intersection of the two cylinders. Because the intersection curve changes slope through three-dimensional space, this intersection cannot be easily chamfered or filleted by conventional machining techniques that would mitigate these stresses. Indeed, complex computer finite element stress analysis calculations indicate that chamfering or filleting the corner intersection has minimal effect on reducing the stresses at this corner intersection.

[0013] The amount of stress at the intersecting bores of conventional fluid end housings is defined by the magnitude of the "Bore Intersection Pitch" as illustrated in FIGS. **3**A, **3**B, and **4**A. Any geometry that reduces the "Bore Intersection Pitch" will reduce the stress concentrations in the fluid end and increase the life of the fluid end by mitigating cyclic fatigue failure. Y-Block fluid end housing designs, such as those illustrated in FIG. **4**A, do reduce this pitch, but the reduction is insufficient to prevent cyclic fatigue failure of the fluid end housing when subjected to high pressure and long pumping cycles.

[0014] Previously filed U.S. Non-Provisional patent application Ser. No. 15/330,212, filed on Aug. 23, 2016, and U.S. Non-Provisional patent application Ser. No. 15/330,213, filed on Aug. 23, 2016, featured an "in-line" design and addressed many of the issues of failure due to high stress and "Bore Intersection Pitch." These applications also addressed the loss of fluid energy at the intersection of the suction bore and plunger bore in typical cross bore designs illustrated in FIGS. **1**, **2**, **3**A, **3**B, **4**A, **4**B, and **5** of those patent applications.

[0015] One of the major shortcomings of the U.S. application Ser. Nos. 15/330,212 and 15/330,213 relates to maintenance complications encountered when changing the plunger or plunger packing. Fluid ends built to Ser. Nos. 15/330,212 and 15/330,213 require removal of the entire fluid end assembly to access the damaged or worn parts. This problem could be addressed with a two-piece plunger design; however, such plungers are difficult to access for maintenance and are prone to premature failure. A design similar to that disclosed in prior art application Ser. No. 15/330,212, with a modification to allow access for maintenance to plungers, packing, suction valve, and the suction seat would provide a major and much needed improvement.

SUMMARY OF THE INVENTION

[0016] In accordance with embodiments of the invention, a fluid end assembly with a modular fluid end housing design is disclosed. The fluid end assembly comprises a modular housing, suction manifold and multiple plungers, suction and discharge valves and seats, suction valve spring retainer/plunger spacers, staybolts, various seals, and miscellaneous components.

[0017] A modular housing of the present invention comprises a single central fluid module and multiple suction seat modules and packing box modules. The central fluid module has multiple internal cavities or fluid chambers. The modular housing assembly includes an equal number of suction seat modules and packing box modules. The number of fluid chambers equals the number of plungers in the pump. The central fluid module is bound to the power end and the suction seat modules by stayrods that pass through stayrod bores in the central fluid module. The packing boxes modules are bound and secured to the central fluid module by packing box bolts that pass through packing box bolt bores in the central module. In the prior art, packing box modules were bound to the fluid end by bolts that were threaded into the main module of the fluid end. The threads in the fluid end housing necessary to accommodate the threaded bolts resulted in high stresses in the sharp cornered thread roots. These high stresses combined with stresses at the intersection of the discharge and suction valve bores with the plunger bore resulted in cyclic fatigue and structural failure of the fluid end.

[0018] The modular design of the present invention affords several unique advantages. For example, the present disclosure provides vastly improved access for maintenance, thereby augmenting the improvements disclosed in the fluid end of U.S. Non-Provisional patent application Ser. No. 15/330,213, illustrated in FIG. **7**. The plunger, packing, suction valve and seat of the present invention can easily be accessed for maintenance and repair by removing the suction seat module from the modular housing. Second, individual modules can be easily be removed and replaced should the particular module fail. In addition to structural failure due to high stress, packing box failures due to erosion from the failure of the packing seal are a common problem; replacing the packing box module is for significantly less costly than replacing the entire fluid end assembly. Third, the modular design is less expensive to manufacture than traditional fluid end housing typical of FIGS. **1**-**7** because the individual modules of this invention can be machined on smaller manufacturing machines than the much larger machines required for the manufacture of traditional fluid end housing typical of FIGS. **1**-**7**.

[0019] In the various embodiments of the invention, staybolt and plunger box bolt bores pass uninterrupted through the central fluid module; threads are eliminated in central fluid modules. Because of the lack of stress in the thread roots typical of packing box attachment designs of the prior art overall stress in the central fluid module is reduced and this member can be reduced in size. This size reduction results in lower manufacturing cost and lower fluid end assembly weight. The latter is critical in truck mounted pumps typical of the high pressure fracturing industry.

[0020] The central fluid module of the present invention comprises multiple fluid chambers with each chamber having a plunger bore and a discharge bore. The centerline of the plunger bore is collinear or aligned with the centerline of the suction bore of the suction seat module, commonly referred to as an "in-line configuration," i.e., the bores and centerlines are aligned. The configuration of the suction bore of the present invention eliminates the loss of fluid energy present in fluid end housings of the prior art in which the suction fluid flow must undergo a right-angle turn to fill the fluid chamber of the housing. Inherently the packing box bore centerline is collinear with the centerline of the plunger bore centerline. The discharge port of the discharge bore in the fluid chamber of the central fluid module is required by this design to pass between two of each of the stayrod and packing box bolt bores without piercing said stayrod or packing box bolt bores. In order to contain the high pump pressure within the discharge port, the discharge port must be surrounded by sufficient wall thickness within the central fluid module to prevent structural failure of discharge port due to the high pressure contained within.

[0021] As discussed in the background of this application, a significantly large discharge and suction valve and seat are necessary to prevent erosion damage to the valve seal when pumping abrasive slurries at high volumes or pump rates. However, a large discharge valve and seat requires a large discharge port in the prior art. Notably, the prior art fails to discuss the size of the discharge port that connects the discharge valve and seat with the plunger bore in the fluid chamber of the fluid end. Because flow in the discharge port is straight and uniform without obstructions or changes of direction, the flow area of the discharge port can be significantly reduced as compared to the flow area of either the discharge or suction valve and seat. Accordingly, the flow area of the discharge port can also be reduced compared to the flow area immediately below either the discharge or suction valves and seats. The prior art fails to disclose the relationship between the discharge port and the discharge manifold. The discharge manifold must accommodate the flow of at least two (2) plungers in a triplex pumps or three (3) plungers in a quintuplex pump. Because of the staggered throws on the crankshaft, multiple discharge and suction valves and seats are open at a particular moment in the revolution or cycle of the pump crankshaft. Thus the discharge manifold must accommodate the exhaust of multiple plungers at a particular moment in time. Thus the size of the discharge port need not be any larger than 50% of the size of the discharge manifold because both the discharge port and manifold are subjected to the same flow conditions. Sizing of the discharge port based on this derivation results in a discharge port of a size significantly smaller is size of any in the prior art. In the prior art discharge ports were by default simply designed to the same size as the bottom of the taper in the fluid end housing utilized to capture the discharge seat. In the prior art, there is no disclosure of reducing the size of the discharge port to reduce stress at the intersection of the discharge and plunger bores of the fluid end housing.

[0022] In the present invention, the flow in the discharge port transitions to the larger flow area in the discharge seat via a frusto-conical volume located between the bottom of the discharge seat and the discharge port. This transitional volume reduces the flow rate of the slurry as it enters the discharge valve and seat. The disclosure of the present invention teaches a nonobvious advantage by showing that the width of the discharge port can be significantly reduced. This width is measured perpendicular to a plane formed by the centerline axis of the plunger bore and discharge bore. Reducing the width of the discharge bore, as defined above, also reduces the Bore Intersection Pitch, which also reduces the stress at the intersection of the plunger bore and the discharge port. Reducing the width of the discharge port, as defined above, allows the discharge port to pass undisturbed between the stayrod bores and plunger box bolt bores without piercing said bores and compromising the structural strength of the central fluid module.

[0023] In an alternate embodiment of this invention, the discharge port is oblong in cross section as opposed to circular. In this embodiment the width of the discharge port is unchanged from the first embodiment in which the discharge port is cylindrical; this width is measured perpendicular to a plane formed by the centerline axis of the plunger and discharge bores. This embodiment does not change the Bore Intersection Pitch or increase the stress level at the intersection of the plunger bore and the discharge port.

[0024] There is the potential of turbulence and erosion damage by a highly abrasive fracturing fluid laden with sand as the fluid is pushed out of the plunger bore into the discharge port, through the discharge valve and seat, and into the discharge manifold. Both embodiments utilize a suction valve spring retainer/plunger spacer with a sleeve or tubular section with a single port to exhaust pumped fluid from the plunger bore into the discharge port. A key feature of this invention is the sizing of the port in this sleeve section. The port is sized is be equal to or slight smaller in area than the area at the intersection of the discharge port with the plunger bore in the fluid chamber of the central fluid module. With the proper positioning, alignment, and sizing of the port in the suction valve spring retainer/plunger spacer, this member becomes a sacrificial, inexpensive, and replaceable part that can be used to absorb erosion damage and prevent premature failure of the central fluid module by structural failure due to high stress induced from the erosion damage.

BRIEF DESCRIPTION OF THE DRAWINGS

[0025] FIG. **1** is a cross-sectional schematic view of a typical prior art plunger pump fluid end showing its connection to a power end by stay rods.

[0026] FIG. **2** schematically illustrates a conventional prior art Triplex plunger pump fluid end housing.

[0027] FIG. **3**A is a cross-sectional schematic view of suction, plunger, access and discharge bores of a conventional prior art plunger pump housing intersecting at right angles and showing areas of elevated stress and the "Bore Intersection Pitch."

[0028] FIG. **3**B schematically illustrates the sectional view labeled B-B in FIG. **3**A.

[0029] FIG. **4**A is a cross-sectional schematic view of suction, plunger and discharge bores of a prior art Y-block plunger pump housing intersecting at obtuse angles showing areas of elevated stress and the "Bore Intersection Pitch."

[0030] FIG. **4**B is a cross-sectional schematic view similar to that in FIG. **4**A, including internal plunger pump components of a prior art Y-block fluid end.

[0031] FIG. **5** schematically illustrates a cross-section of a prior art right-angular plunger pump with valves, plunger,

and a suction valve spring retainer showing the flow around the suction valve and the turn of the fluid into the plunger bore.

[0032] FIG. **6**A schematically illustrates a three dimensional cross-section of one cylinder of a prior art right-angular plunger pump.

[0033] FIG. **6**B schematically illustrates the enlarged sectional view labeled B-B in FIG. **6**A highlighting the convergence of the stress at the intersection bores.

[0034] FIG. **7** schematically illustrates an inline fluid end of the prior art of U.S. application Ser. No. 15/330,213.

[0035] FIG. **8** schematically illustrates a cross-section of the fluid end assembly of the present invention showing its connection to a power end by stay rods.

[0036] FIG. **9** illustrates an orthogonal exterior view of the fluid end assembly of the present invention.

[0037] FIG. **10**A illustrates a top external view of the fluid end assembly of the present invention.

[0038] FIG. **10**B schematically illustrates the sectional view labeled B-B in FIG. **10**A including detailed cross sections of the components of the assembly.

[0039] FIG. **11** illustrates an orthogonal cross sectional view of the modular housing of the present invention; excluding interior components of the fluid end assembly.

[0040] FIG. **12**A schematically illustrates cross section of the fluid end housing of the present invention.

[0041] FIG. **12**B schematically illustrates the sectional view labeled B-B in FIG. **12**A.

[0042] FIG. **12**C schematically illustrates the sectional view labeled B-B in FIG. **12**A.

[0043] FIG. **13**A schematically illustrates an orthogonal view of the suction valve spring retainer/plunger spacer of the fluid end assembly of this invention.

[0044] FIG. **13**B schematically illustrates an end view of the suction valve spring retainer/plunger spacer of FIG. **13**A.

[0045] FIG. **13**C schematically illustrates a top view of the suction valve spring retainer/plunger spacer of FIG. **13**A.

[0046] FIG. **13**D schematically illustrates the sectional view labeled D-D in FIG. **13**C.

[0047] FIG. **14** schematically illustrates a cross-section of an alternate embodiment of the fluid end assembly of the present invention.

[0048] FIG. **15**A schematically illustrates a cross-section of an alternate embodiment of the modular housing of the present invention.

[0049] FIG. **15**B schematically illustrates the sectional view labeled B-B in FIG. **15**A.

[0050] FIG. **15**C schematically illustrates the sectional view labeled C-C in FIG. **15**A.

[0051] FIG. **16**A schematically illustrates an orthogonal view of an of the suction valve spring retainer/plunger spacer of an alternate embodiment of the fluid end assembly of this invention.

[0052] FIG. **16**B schematically illustrates an end view of the suction valve spring retainer/plunger spacer of FIG. **16**A.

[0053] FIG. **16**C schematically illustrates a top view of the suction valve spring retainer/plunger spacer of FIG. **16**A.

[0054] FIG. **16**D schematically illustrates the sectional view labeled D-D in FIG. **16**C.

DETAILED DESCRIPTION OF PREFERRED EMBODIMENTS

[0055] FIG. **8** schematically illustrates a cross-section of an embodiment of the fluid end assembly **100** of the present invention showing its connection to a power end by multiple stay rods **6**. As opposed to the fluid end housing of the prior art as illustrated in FIG. **1**, fluid end assembly **100** of the present invention is configured with the suction manifold **5** mounted in a position on the fluid end housing opposite the power end of the pump. The primary component of the fluid end assembly **100** of the present invention is modular housing **101** which is connected to the power end by multiple stayrods **6** and stayrod retaining nuts **7**.

[0056] FIG. **9** and FIG. **10**A schematically illustrates an orthogonal and top view respectively of the exterior of the fluid end assembly **100**. Fluid end assembly **100** comprises modular housing **101**, suction manifold **5**, and various internal components. The modular housing **101** includes one central fluid module **2** and multiple packing box modules **3**, suction seat modules **1**, stayrods **6**, stayrod retaining nuts **7**, packing box module retaining bolts **8**, and internal seals **9** (illustrated in FIG. **10**B.) The number of packing box modules **3** and the number of suction seat modules **1** correspond to the number of plungers **400** in the fluid end assembly **100**. The fluid end assembly **100** illustrated in FIG. **9** is constructed with five (5) plungers **400** including the center most plunger **410** and immediately adjacent plungers **510** and **610** located to either side. Plungers **410**, **510**, and **610** are defined by plunger centerlines **419**, **519**, and **619**, respectively, as illustrated in FIG. **10**A. Modular housing **101** is attached to the pump power end by multiple stayrods **6**. Stayrods **6** with the aid of the stayrod retaining nuts **7** bind and secure the suction seat modules **1** to the central fluid module **2**. Typically there are four (4) stayrods **6** per plunger **400** in the fluid end assembly **100**. Packing box module retaining bolts **8** bind and secure the plunger boxes **3** to the central fluid module **2**. Typically there are four (4) packing box module retaining bolts **8** per plunger box module **3** in the modular housing **101**.

[0057] FIG. **10**B schematically illustrates a cross-section of the fluid end assembly **100** of the present invention showing modular housing **101** and the major internal components of the assembly **100**. Modular housing **101** includes central fluid module **2**, suction seat module **1**, packing box module **3**, stayrods **6**, stayrod hex nuts **7**, packing box module retaining bolts **8**, and seals **9**. Modular housing components comprises multiple internal bores **10**, **20**, **30** and **40**. Central fluid module **2** comprises multiple fluid chambers **4**, with one fluid chamber **4** for each plunger **400** in the pump. Each fluid chamber **4** consists of a discharge bore **20** and a plunger bore **40**. Suction bore **10** with centerline **19** is wholly located within the suction seat module **1**. Plunger packing bore **30** with centerline **39** is wholly located within packing box module **3**. The centerlines **39** and **19** of the packing bore **30** and the suction seat module bore **10** respectively are substantially collinear with the centerline **49** of the plunger bore **40**. The centerline **29** of the discharge bore **20** is substantially perpendicular to a plane formed by the centerlines **419**, **519**, and **619** of plungers **410**, **510**, and **610** respectively. Plunger centerline **419** is substantially collinear with plunger bore centerline **49**.

[0058] The suction bore **10**, located wholly within the suction seat module **1** and opposite to the packing bore **30**, holds the suction seat **112**. Discharge bore **20** connects with discharge manifold **50**, which connects with multiple adjacent discharge bores and exhausts pumped fluid externally from the modular housing **101**. Discharge bore **20** contains a discharge seat **212**, discharge valve **214**, discharge valve

spring **215**, discharge cover **216**, and discharge cover retainer **217**. Major internal components of the assembly **100** arranged in the packing bore **30** of packing box module **3** include plunger packing **361**, and the plunger packing gland nut **351**. Plunger bore **40** holds the suction valve spring retainer/plunger spacer **440**, suction valve **114**, suction valve spring **115**, suction valve guide **458** and suction valve spring retainer **456**. Suction valve guide **458** and suction valve spring retainer **456** are integral to the suction valve spring retainer/plunger spacer **440**. Plunger **410** reciprocates back and forth within the sleeve section **442** of the suction valve spring retainer/plunger spacer **440**, packing box module bore **30**, packing **361**, and packing gland nut **351**.

[0059] FIG. **11** is an orthogonal cross sectional view the modular housing **101** of FIG. **9** where the cross section plane is defined by the plunger bore centerline **49** and the discharge bore centerline **29**.

[0060] FIG. **12**A is an illustrated planar view of the cross section of FIG. **11** featuring the modular housing **101** comprising the suction bore **10**, discharge bore **20**, packing bore **30**, plunger bore **40**, and discharge manifold bore **50**. Various internal components of the modular housing **100** shown in FIGS. **8** and **10**B are not illustrated in FIGS. **11**, **12**A, **12**B, and **12**C. Suction bore **10** as illustrated in FIG. **12**A comprises a tapered suction seat bore **12** that captures suction seat **112**. Immediately adjacent to the suction seat area **12** is suction port **11** that connects the suction seat **112** and suction valve **114** with the suction manifold **5** as illustrated in FIGS. **8** and **9**. Tapered suction seat bore **12** is separated from suction port **11** by suction seat taper shoulder **18** to which the bottom of suction seat **112** contacts. Internal diameter **15** of suction seat taper shoulder **18** is coincidental with internal diameter **15** of suction port **11**.

[0061] Discharge bore **20** of the central fluid module **2** comprises a tapered discharge seat bore **22** that captures the discharge seat **212** as shown in FIG. **10**B. Immediately adjacent to the tapered discharge seat bore **22** is frusto-conical transition volume **23** and discharge port **21** that connect the discharge seat **212** and discharge valve **214** with plunger bore **40** at the bore intersection **42**. Discharge bore **20** of central fluid module **2** also contains a discharge cover bore **26** and discharge cover retainer bore **27** that mate with discharge cover **216** and discharge cover retainer **217**, respectively. Discharge valve bore **24** allows fluid passage from discharge seat **212** around discharge valve **214** and into discharge manifold **50**.

[0062] Tapered discharge seat bore **22** is separated from frusto-conical transition volume **23** by discharge seat taper shoulder **28** to which the bottom of discharge seat **212** contacts. Internal diameter **25** of suction seat taper shoulder **28** is coincidental with major internal diameter **25** of frusto-conical transition volume **23**.

[0063] Packing box module bore **30** comprises a packing bore **32** for holding plunger packing **361** and a plunger packing gland nut bore **35** for positioning of the plunger packing gland nut **351**, as illustrated in FIG. **10**B. Packing bore **32** is separated from the plunger bore **40** by a transition bore **38** which connects the packing box module bore **30** with plunger bore **40**. Centerlines **39**, **19**, and **49** of packing bore **30**, suction bore **10**, and plunger bore **40** respectively are substantially collinear.

[0064] Each fluid chamber **4** of central fluid module **2** consists of a discharge bore **20** and a plunger bore **40**. Plunger bore **40** mates concentrically with suction valve spring retainer/plunger spacer **440**. As illustrated in FIG. **10**B, spacer port **441**, located within sleeve section **442** of suction valve spring retainer/plunger spacer **440**, connects plunger bore **40** with discharge port **21**. Multiple seals **9** close and seal internal pump pressure within each fluid chamber **4** from the exterior of modular housing **101**. Substantially identical seals **9** seal between central fluid module **2** and multiple suction seat modules **1** and again between central fluid module **2** and multiple packing box modules **3**.

[0065] As further illustrated in FIGS. **11** and **12**A, stayrod **6** connects central fluid module **2** with multiple seat carriers **1**. As illustrated in FIG. **12**B, shanks **61** of stayrods **6** passes through bores **60** in central fluid module **2**. Alignment between central fluid module **2** and seat carriers **1** is maintained by the concentric fit between shanks **6***l* of stayrods **6** and bores **60** in central fluid module **2**. Face **37** of packing box module **3** abuts face **47** of central fluid module **2** and face **16** of seat carrier **1** abuts face **46** of central fluid module **2**. Face **67** of stayrod **6** abuts face **47** of central fluid module **2** and face **77** of hex nut **7** abuts face **17** of seat carrier **1**. Torque applied to hex nut **7** forces central fluid module **2** and seat carrier **1** into binding contact creating a rigid modular housing **101**. Similarly, shanks **81** of packing box module retaining bolts **8** pass through bores **80** of central fluid module **2** to bind and secure the packing box module **3** to central fluid module **2**. Alignment of packing box module **3** to central fluid module **2** is achieved by concentric fit between bores **80** in central fluid module **2** with shanks **81** of packing box module retaining bolts **8**.

[0066] FIG. **12**B schematically illustrates Section "B-B" of FIG. **12**A; FIG. **12**C schematically illustrates Section "C-C" of FIG. **12**A. FIG. **12**B illustrates the relationship of width W-DP of the discharge port **21** to the width of the plunger spacing W-PS. In the present invention, the width W-DP is measured perpendicular to a plane formed by the centerlines **49** and **29** of the plunger bore **40** and discharge bore **20**, respectively. The pressure within the plunger bore **40** and the discharge port **21** is cyclic due to the varying pressures of near zero pressure on the suction stroke of the plunger **410** and maximum pump pressure on the discharge stroke. As opposed to static loads, cyclic pressure loads result in fatigue that requires thicker wall thickness to prevent failure. For pumps with four (4) stayrods **6** per plunger, the wall thickness WT, between the stayrod bores **60** and the discharge port **21** is limited. To establish an adequate safety factor on a pump with four (4) stayrods **6** per plunger, the minimum wall thickness WT must be greater than 50% of the width W-DP of the discharge port **21** measured perpendicular to a plane defined by the plunger bore **40** centerline **49** and the discharge bore **20** centerline **29**. Alternately this relationship is mathematically expressed as: WT 50%-W-DP. Similarily the width of the discharge port W-DP is limited to approximately 20% of the plunger spacing W-PS. Alternately this relationship is mathematically expressed as: W-DP≤20% W-PS.

[0067] FIG. **12**B also illustrates the relationship between the diameter D-SP of the suction port **11**, the diameter D-DM of the discharge manifold **50**, and the width W-DP of the discharge port **21**. The width W-DP of the discharge port **21** is substantially half the diameter D-SP of the suction port **11**. Alternately, this relationship is mathematically expressed as: W-DP=50% D-SP. The width W-DP of the discharge port **21**

is equal or less than the diameter D-DM of the discharge manifold **50**. Alternately this relationship is mathematically expressed as: W-DP≤D-DM.

[0068] As shown in FIG. **10**B, discharge port **21** connects with frusto-conical volume **23** to accommodate the flow through the valve seat **212** at the major diameter **25** at the top of the frusto-conical volume **23**. The reduced diameter at the bottom of the discharge port **21** ensures that bore intersection **42** with plunger bore **40** occurs with a very low bore intersection pitch as opposed to the bore intersections of conventional fluid end housings as illustrated in FIGS. **3**A, **3**B, and **4**A, which have slopes diverging significantly ("warped") in three-dimensional space. The greater the warpage of the bore intersection, the greater the Bore Intersection Pitch and the greater the concentration of stresses at the bore intersections of the plunger bore with the suction or discharge bores in fluid end housings of the prior art. The stresses at the intersecting plunger and discharge bores of the present invention are significantly reduced over the stresses at the intersecting bores of the prior art.

[0069] FIG. **12**C also illustrates the relationship the relationship between the width W-DP of the discharge port **21** and the width of the plunger spacing W-PS from the view of section "C-C" as defined in FIG. **12**A. To establish an adequate safety factor on a pump with four (4) stayrods **6** per plunger, the width W-DP of the discharge port **21** measured perpendicular to a plane defined by the plunger bore **40** centerline **49** and the discharge bore **20** centerline **29** is limited to approximately 20% of the plunger spacing W-PS. Alternately this relationship is mathematically expressed as:

$$W\text{-DP} \leq 20\%\ W\text{-PS}.$$

[0070] FIGS. **13**A, **13**B, **13**C and **13**D schematically illustrate the suction valve spring retainer/plunger spacer **440**. FIG. **13**A illustrates orthogonal view of the suction valve spring retainer/plunger spacer **440**. FIG. **13**B schematically illustrates an end view of the suction valve spring retainer/plunger spacer **440**. FIG. **13**C schematically illustrates a top view of the suction valve spring retainer/plunger spacer **440**. FIG. **13**D schematically illustrates the section view labeled D-D of the suction valve spring retainer/plunger spacer **440** of FIG. **13**C. Suction valve spring retainer/plunger spacer **440** is constructed with a sleeve shaped section **442**, a suction valve spring retainer **456** and a suction valve guide **458**. Sleeve section **442** is substantially tubular in shape with centerline **459**.

[0071] Sleeve section **442** of suction valve spring retainer/plunger spacer **440** has a substantially cylindrically inside surface **444**. The diameter of cylindrical inner surface **444** is slightly greater than diameter of plunger **410** to allow plunger **410** to reciprocate freely within sleeve section **442** of suction valve spring retainer/plunger spacer **440**. Substantially cylindrical exterior surface **443** of sleeve section **442** of the suction valve spring retainer/plunger spacer **440** mates with plunger bore **40** of central section **2** of modular housing **101**.

[0072] Sleeve section **442** has a port **441** that aligns with port **21** in central section **2** of modular housing **101**. The spring retainer section **456** is configured to position and retain the suction valve spring **115**. Spring retainer section **456** connects with sleeve section **442** via multiple webs **452**. Multiple ports **451** allow passage of pumped fluid from the suction valve **114** to the interior of sleeve section **442** of the suction valve spring retainer/plunger spacer **440**. Valve guide **458** guides suction valve **114** between the open and closed position against seat **112**. Face **447**, distal from valve guide **458**, shoulders against face **37** of packing box module **3** of modular housing **101**. Bevel **448** at the intersection of port **441** with inside cylindrical surface **444** reduces fluid turbulence as pumped fluid exits plunger bore **40** into discharge port **21**. Centerline **449** of port **441** aligns with discharge bore **20** centerline **29** of central fluid module **2**. The area of port **441** is equal or slightly smaller than the area of bore intersection **42** of port **21** in central fluid module **2**.

[0073] FIG. **14** schematically illustrates an alternate embodiment cross-section of the fluid end assembly **100'** of the present invention showing modular housing **101'** and the major internal components of the assembly **100'** including a modular housing **101'**. Compared to fluid end assembly **100** of FIGS. **8**, **9**, **10**A and **10**B the only difference in fluid end assembly **100'** is the discharge port **21'** and frusto-conical volume **23'** of central fluid module **2'** of fluid end housing **101'**. In addition, there is a change to discharge port **441'** of suction valve spring retainer/plunger spacer **440'** of fluid end assembly **100'**. No other components of fluid end assembly **100'** are altered in design or function from the components of fluid end assembly **100**.

[0074] FIG. **15**A schematically illustrates a cross-section of an alternate embodiment of the central fluid module **2'** of the modular housing **101'** of the present invention. Central fluid module **2'** features multiple fluid chambers **4'**, with one fluid chamber **4'** for each plunger **400** in the pump. Each fluid chamber **4'** consists of a discharge bore **20'** and a plunger bore **40'**. Central fluid module **2'** differs only from central fluid module **2** of FIGS. **12**A, B, and C in the design of the discharge port **21'** that connects plunger bore **40'** with the discharge bore **20'** and the discharge valve and seat **214** and **212**, respectively. All other areas of central fluid module **2'** are identical with similar areas of central fluid module **2** as shown in FIGS. **12**A, B, and C. In this embodiment, discharge port **21'** is oblong in cross section, as shown in FIG. **15**C, and connects with frusto-conical volume **23'**. Volume **23'** is identical to frusto-conical volume **23** of fluid end housing **2**, except that the intersection of volumes **23'** and **21'** is altered from the intersection of volumes **23** and **21**. In addition, intersection **42'** that connects discharge port **21'** with plunger bore **40'** is elongated as shown in FIG. **15**C as opposed to circular at the intersection of discharge port **21** plunger bore **40** of central fluid module **2**.

[0075] FIG. **15**B schematically illustrates Section "B-B" of FIG. **15**A. FIG. **15**C schematically illustrates Section "C-C" of FIG. **15**A. FIG. **15**B illustrates that the width W-DP' of the discharge port **21'** is unchanged from width W-DP of discharge port **21** in FIG. **12**B, unchanged despite the change in the shape of discharge port **21'** and frusto-conical volume **23'**. In this embodiment, this width is measured perpendicular to a plane formed by the centerlines **49'** and **29'** of the plunger bore **40'** and discharge bore **20'** respectively. Therefore, the minimum wall thickness WT' between the discharge port **21'** and the stayrod bores **60** is also unchanged from FIG. **12**B. The mathematical relationships, WT≥50% W-DP and W-DP'≤20% W-PS', is are unchanged and the strength of this section of the central fluid module **2'** is unchanged from as compared to the strength of central fluid module **2**. The major benefit of the alternate embodiment of FIGS. **15**A, **15**B, and **15**C is that the flow area of the discharge port **21'** is increased without effecting the strength of the central fluid module **2'**.

[0076] Also illustrated in FIG. **15**B is the unchanged relationship between the diameter D-SP of the suction port **11**, the diameter D-DM of the discharge manifold **50**, and the width W-DP' of the discharge port **21'**. The width W-DP' of the discharge port **21'** is approximately half the diameter D-SP of the suction port **11** and can be mathematically expressed as: W-DP'~=50% D-SP. The width W-DP' of the discharge port **21'** is equal to or less than the diameter D-DM of the discharge manifold **50**; mathematically expressed as: W-DP'≤D-DM.

[0077] FIG. **15**C illustrates the oblong section of discharge port **21'** where the short axis **45** of the oblong shaped discharge port **21'** is perpendicular to a plane formed by the centerlines **49'** and **29'** of the plunger bore **40'** and discharge bore **20'** respectively. FIG. **15**C also illustrates the unchanged relationship between the width W-DP' of the discharge port **21'** to the width of the plunger spacing W-PS' from the view of section "C-C" as defined in FIG. **15**A.

[0078] FIGS. **16**A, **16**B, **16**C, and **16**D schematically illustrate the suction valve spring retainer/plunger spacer **440'** a component of fluid end assembly **100'**. FIG. **16**A illustrates orthogonal view of the suction valve spring retainer/plunger spacer **440'**. FIG. **16**B schematically illustrates an end view of the suction valve spring retainer/plunger spacer **440'**. FIG. **16**C schematically illustrates a top view of the suction valve spring retainer/plunger spacer **440'**. FIG. **16**D schematically illustrates the section view labeled D-D of the suction valve spring retainer/plunger spacer **440'** of FIG. **16**C. Suction valve spring retainer/plunger spacer **440'** is constructed with a sleeve shaped section **442'**, a suction valve spring retainer **456**, and a suction valve guide **458**. Sleeve section **442'** is substantially tubular in shape with centerline **459'**. The diameter of cylindrical inner surface **444'** of sleeve section **442'** is slightly greater than diameter of plunger **410** to allow plunger **410** to reciprocate freely within sleeve section **442'** of the suction valve spring retainer/plunger spacer **440'**. Substantially all of the cylindrical exterior surface **443'** of sleeve section **442'** of the suction valve spring retainer/plunger spacer **440'** mates with plunger bore **40'** of central section **2'** of fluid end housing **101'**.

[0079] Sleeve section **442'** of suction valve spring retainer/plunger spacer **440'** has a port **441'** that aligns with port **21'** in central section **2'** of modular housing **101'**. Centerline **449'** of port **441'** aligns with discharge bore **20'** centerline **29'** of central fluid module **2'**. Valve guide **458**, spring retainer section **456**, face **447**, multiple webs **452**, and multiple ports **451** of suction valve spring retainer/plunger spacer **440'** are unchanged from similar sections of suction valve spring retainer/plunger spacer **440** illustrated in FIGS. **13**A, **13**B, **13**C, and **13**D. Port **441'** is substantially oblong in shape to coincide with oblong shape of discharge port **21'** of central section **2'**; long axis of oblong port **441'** is parallel to centerline axis **459'** of central section **442'**. The area of port **441'** is equal or slightly smaller than the area of bore intersection **42'** of port **21** in central fluid module **2**.

What is claimed is:

1. A plunger pump fluid end comprising:

a modular housing, wherein said housing further comprises:

a central fluid module;

a plurality of packing box modules;

a plurality of suction seat modules; and

a plurality of suction valve spring retainer/plunger spacers;

a plurality of plungers and plunger packings; and

a plurality of suction valves and seats and a plurality of discharge valves and seats;

wherein the number of suction seat modules is equal to the number of plunger packing box modules and also is equal to the number of said plungers;

wherein each of said central fluid modules comprises a plurality of central fluid chambers and the number of said central fluid chambers equals the number of said plungers;

wherein each of said central fluid chambers comprises a plunger bore and a discharge bore;

wherein centerline axes of a bore of said suction seat module and a bore of a packing box module are colinear with centerline axes of said plunger bore in each central fluid chamber;

wherein a centerline axis of said discharge bore is perpendicular to the centerline axes of said suction bore and said plunger bore;

wherein the number of suction valves and seats equals the number of discharge valves and seats which is also equal to the number of plungers in said fluid end;

wherein the number of said suction valve spring retainer/plunger spacers equals the number of plungers in said fluid end; and

wherein the area of said port in said suction valve spring retainer/plunger spacer is equal to or less than the area of the intersection of said plunger and discharge bores in said central housing.

2. A plunger pump fluid end of claim **1**, wherein said discharge port in said central housing is oblong in cross section at the intersection of the plunger bore and the discharge bore and the long axis of said oblong section is parallel with the centerline axis of said plunger.

3. A plunger pump fluid end of claim **1**, wherein the port in said suction valve spring retainer/plunger spacer is oblong in cross section and the long axis of said oblong section is parallel with the centerline axis of said plunger.

4. A plunger pump fluid end of claim **1**, wherein a width of said discharge port, measured perpendicular to a plane formed by the centerline axis of the plunger bore and the centerline axis of the discharge bore, is smaller in width than the port in each of the suction seat module.

5. A plunger pump fluid end of claim **1**, wherein a width of said discharge port, measured perpendicular to a plane formed by the centerline axis of the plunger bore and the centerline axis of the discharge bore, is 50% or less of a width of a port in each of the suction seat modules.

6. A plunger pump fluid end of claim **1**, wherein a width of said discharge port, measured perpendicular to a plane formed by the centerline axis of the plunger bore and the centerline axis of the discharge bore, is less than the width of the discharge manifold in said central fluid module.

8. A plunger pump fluid end of claim **1**, wherein a width of said discharge port, measured perpendicular to a plane formed by the centerline axis of the plunger bore and the centerline axis of the discharge bore, is less than 20% of a distance between the centerlines of adjacent said plunger bores.

9. A plunger pump fluid end of claim **1**, wherein said discharge port is oblong in cross section at an intersection of

the plunger bore and the discharge bore and a long axis of said oblong section is parallel with the centerline axis of said plunger bores.

10. A plunger pump fluid end of claim **1**, wherein a minimum wall thickness between said discharge port and said stayrod bores is equal to or greater than 50% of a width of said discharge port, wherein said width is measured perpendicular to a plane formed by said centerline axis of the plunger bore and said centerline axis of the discharge bore.

* * * * *