United States Patent [19]

Roy et al.

[11] **3,747,944**

[45] **July 24, 1973**

[54] **DRY LUBRICATED MATERIALS, MEMBERS AND SYSTEMS WITH BORON NITRIDE AND GRAPHITE**

[76] Inventors: **Amedee Roy,** 2661 Cheswick Dr., Troy, Mich. 48084; **James M. Geyman,** 19706 Old Homestead, Harper Woods, Mich.

[22] Filed: **Dec. 27, 1971**

[21] Appl. No.: **212,414**

[52] **U.S. Cl.** **277/96,** 60/39.51, 165/9

[51] **Int. Cl.** **F16j 15/34**

[58] **Field of Search** ..... 165/9; 60/39.51, 60/39.51 H; 117/93.1 PF; 277/96, 81

[56] **References Cited**

UNITED STATES PATENTS

3,378,392	4/1968	Longo	117/93.1 PF
3,503,787	3/1970	Pendse	117/93.1 PF
3,601,182	4/1971	Rao	277/96 R

Primary Examiner—Samuel B. Rothberg
Assistant Examiner—Robert I. Smith
Attorney—Oliver F. Arrett

[57] **ABSTRACT**

An improved gas turbine regenerator seal system having a new configuration wherein one of the rubbing seal members thereof carries a new material providing an initial working surface comprised of an iron oxide matrix containing an interspersed mixture of boron nitride, nickel coated graphite and sodium sulfate — Na_2SO_4, sodium phosphate — Na_3PO_4, or calcium fluoride — CaF_2.

14 Claims, 5 Drawing Figures

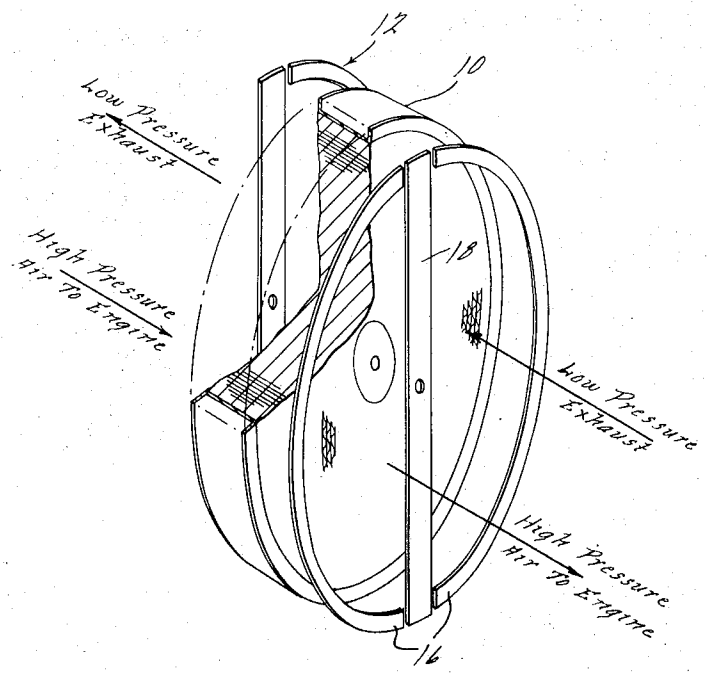

PATENTED JUL 24 1973

3,747,944

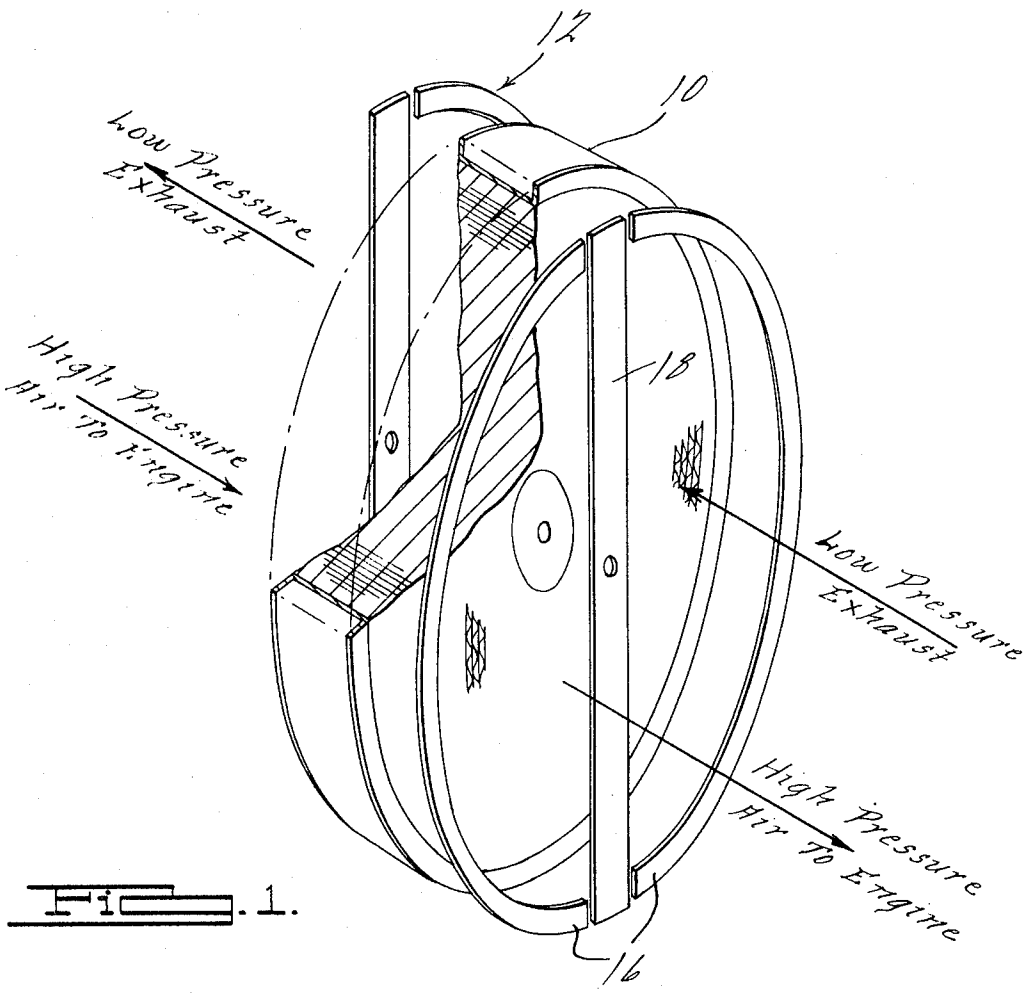

Fig. 1.

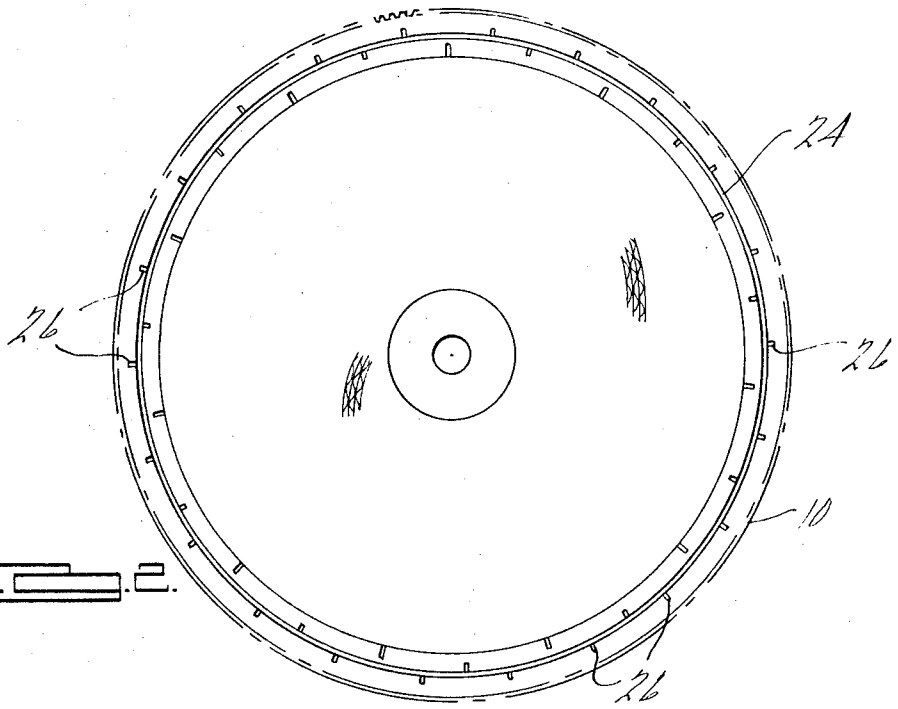

Fig. 2.

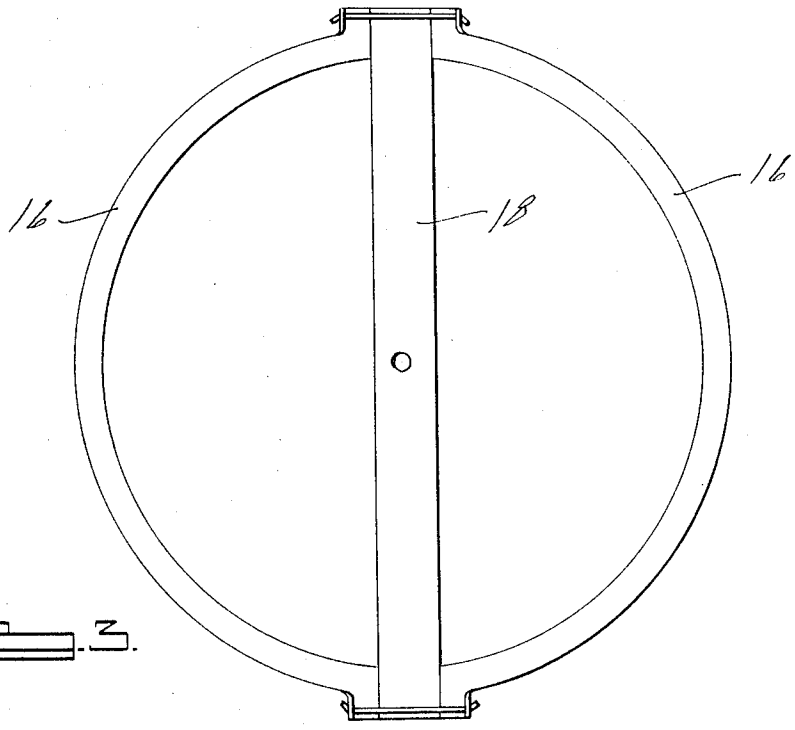

Fig. 3.

Fig. 4a.

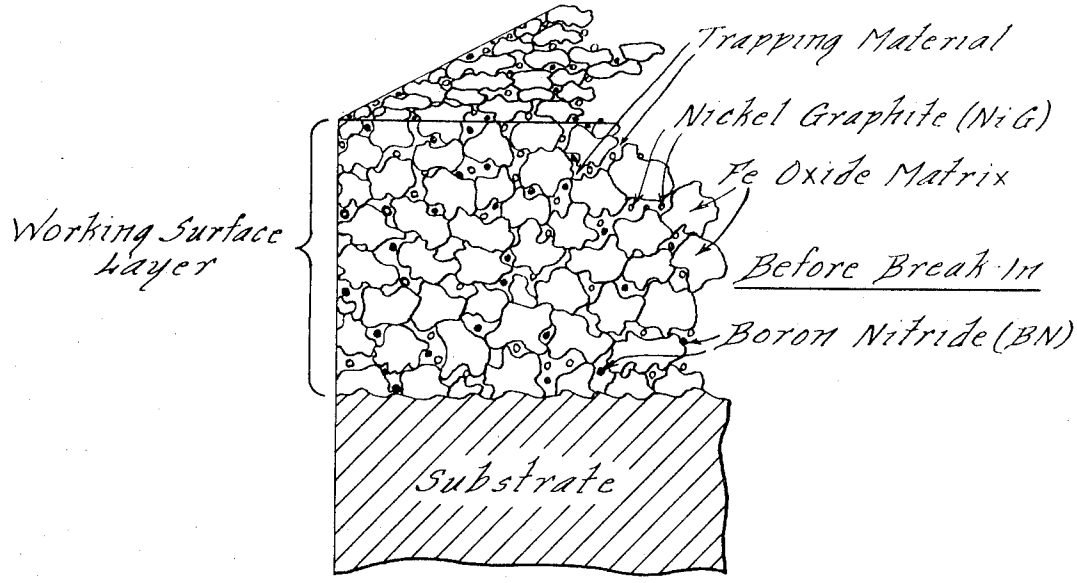
Trapping Material
Nickel Graphite (Ni G)
Fe Oxide Matrix
Working Surface Layer
Before Break-In
Boron Nitride (BN)
Substrate

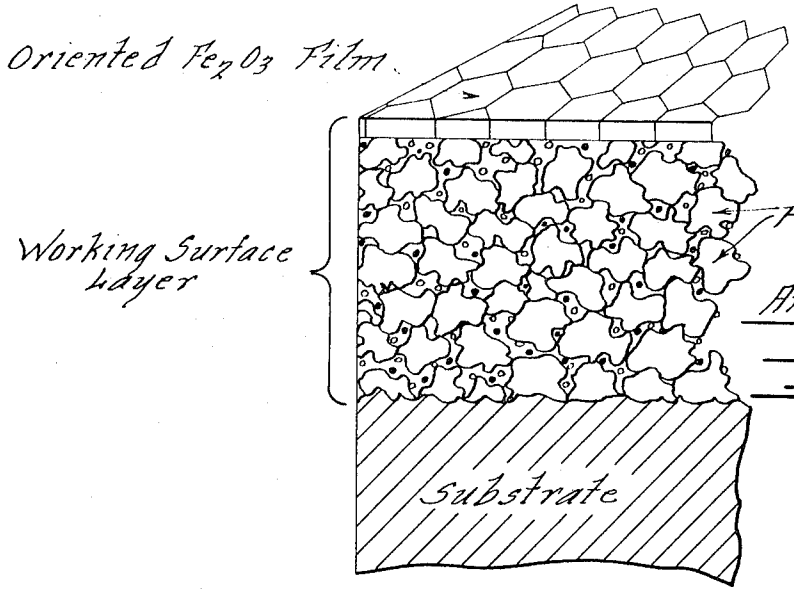
Oriented Fe_2O_3 Film
Working Surface Layer
Fe Oxide Matrix
After Break-In
Substrate

Fig. 4b.

DRY LUBRICATED MATERIALS, MEMBERS AND SYSTEMS WITH BORON NITRIDE AND GRAPHITE

CROSS REFERENCE RELATED APPLICATIONS

This application is related to two co-pending applications filed on even date herewith. The first application Ser. No. 212,249 is entitled "Iron Oxide Material and Members for Dry Lubricated Systems Including the Method of Preparation Therefor," the inventors being Amedee Roy, Claude Belleau and James M. Geyman. The second application Ser. No. 212,413 is entitled "Dry Lubricated Materials, Members and Systems with Graphite and Methods of Preparation," the inventors being Amedee Roy and James M. Geyman. The co-pending applications are assigned to the same assignee as the present application and the contents thereof are incorporated herein by reference. This invention constitutes an improved variation of the inventions disclosed in the aforementioned co-pending applications.

BACKGROUND OF THE INVENTION

This invention relates in general to a material for dry lubricated rubbing members, such as might be used in Wankel engines, and more particularly to turbine engine regenerator members which use such materials and even more particularly to a new configuration of seal system which uses such a material. Dry lubrication refers to systems wherein a member rubs against a mating member as in turbine regenerators wherein a regenerator core rotates in rubbing contact between a set of seals and cross-arms at high temperatures and in the absence of fluid lubricants. Heretofore, most systems of this type have been made with sintered metallic abradable work surfaces, as referred to in the first of the above referenced co-pending applications, or have been coated with graphite and have not functioned well or were not practical for use in gas turbine engines and the like.

SUMMARY OF THE INVENTION

This invention in its broadest sense provides a new material exhibiting desirable friction and wear characteristics for use under conditions of the type encountered under elevated temperature dry lubrication conditions. The material forms a working surface for one of a pair of mating members adapted for rubbing relationship, and is particularly adapted for use at temperatures such as those which occur in certain sections of gas turbine engine regenerators, that is, temperatures in the area of about 1,000° F. According to the invention, such a working surface initially generally comprises a matrix layer of iron oxide, preferably Fe_3O_4, carried by a substrate. The iron oxide layer contains an interspersed mixture of nickel coated graphite, boron nitride (BN) and Na_2SO_4 or the equivalent defined hereinbelow. During a run-in or break-in period, as at turbine engine operating temperature, e.g., 800° – 1,000°F., the graphite and boron nitride act as a solid lubricant for the members and aid in the formation of a substantially continuous highly oriented Fe_2O_3 crystalline surface film on the rubbing member work surface. The film is highly oriented because most of the oxide particles, as a result of run-in or break-in, align themselves due to the rubbing action during break-in with their basal planes substantially parallel to the top or exterior rubbing portion of the working surface. The

Na_2SO_4 acts as a particle trapping material in which the abraded oxide particles embed and orient themselves to sinter and form the substantially continuous film of highly oriented Fe_2O_3.

The invention also provides a new hot rim and regenerator design configuration containing a novel debris groove arrangement which uses this material.

BRIEF DESCRIPTION OF THE DRAWINGS

FIG. **1** is a schematic showing of a part of a gas turbine engine comprising the regenerator portion or system.

FIG. **2** is an elevation showing a regenerator core.

FIG. **3** is an elevation showing an inner seal system from a regenerator section including hot seal rims and hot cross arms.

FIGS. **4***a* and **4***b* are fragmentary schematics illustrating the structure of the material according to this invention before and after break-in, respectively.

DESCRIPTION OF THE PREFERRED EMBODIMENT

In the system of FIG. **1**, a regenerator core **10** rotates in rubbing contact between an outer seal system **12** also known as the cold seals, and an inner seal system **14**, also known as the hot seals. System **14** includes a hot rim seal **16** and a hot cross arm seal **18**. The material of this invention is particularly adapted for use as a working surface on hot rim seal **16** and will be described in that context herein although it is not necessarily limited thereto. In the environment of the hot rim seal the material is typically exposed to working temperatures in the order of about 600° – 1,000° F.

The material of such a working surface, prior to break-in, consists of an iron oxide matrix preferably Fe_3O_4, on the surface of a substrate, such as **430**, **442**, and **446** stainless steel or the like, generally ferritic stainless materials. The exact character of the substrate is not important so long as it possesses the necessary compatible thermal expansion coefficient and the like with the material of the working surface layer. The other iron oxides FeO and Fe_2O_3 or various mixtures thereof may also be used for the initial oxide matrix. The iron oxide contains an interspersed mixture of boron nitride, nickel coated graphite and sodium sulfate, sodium phosphate or calcium fluoride (Na_2SO_4, Na_3PO_4 or CaF_2) trapping material as shown in FIG. **4***a*. Preferably these materials are present in relative proportions of about 55 percent by weight Fe_3O_4, 20 percent by weight nickel coated graphite, 20 percent by weight Na_2SO_4 or equivalent and about 5 percent by weight boron nitride. The boron nitride may be varied from about 1–10 percent, the trapping material from about 5–30 percent, and the nickel coated graphite from about 10–50 percent, Fe_3O_4 making up the balance.

The initial working surface is best formed by flame or plasma spraying a particulate mixture of Fe_3O_4 powder, nickel coated graphite, boron nitride and the trapping material Na_2SO_4, Na_3PO_2, CaF_2 or mixtures thereof onto the substrate. Nicel coated graphite is used in the case of spraying because it comprises graphite particles coated with nickel to protect the graphite during spraying. It is commercially available in various compositions ranging from about 50–85 percent nickel and 50–15 percent graphite. Otherwise, ordinary graphite particulate may be used.

The configuration of the regenerator section has been found important in securing the full benefit of this invention when applied to turbine engines. FIG. **2** shows a regenerator core **10** having a peripheral groove **24** on the face thereof and spaced grooves **26** radiating from the peripheral groOve toward the circumference of the core. FIG. **3** shows the hot rim seals **16** and cross arm **18** which mate with the regenerator core, the rims, cross-arms and core being in rubbing contact as shown above in FIG. **1** when the engine is in operation. Note from FIG. **3** that the surfaces of the seal system are smooth.

The peripheral and radial grooves **29** and **26** on the regenerator core are critical to long-life operation of seal systems of this configuration. According to this aspect of the invention, the grooves function as a debris removing channel providing for the removal of any excessive amounts of abraded particles which may form, i.e., those particles not used in forming the continuous film. Excessive amounts of abraded particles which do not embed themselves in the trapping of the working surface layer cause abrasion of the mating surfaces.

The configuration and working surface material cooperate together to provide for the embedding of some of the abraded iron oxide particles in the working surface where during run-in they orient themselves in a self-preferred fashion with their basal planes parallel to the working surface and sinter together to form a substantially continuous highly oriented Fe_2O_3 film on the seal contact surface as shown in FIG. **4***b*. The grooves provide a means for removing those excess particles which do not embed themselves in the working surface thus avoiding having the particles trapped between the members and abrading the surface, causing damage.

Also, as a result of run-in or break-in the transfer of iron oxide and trapping material from the seal system to the core surface occurs to form a mating surface thereon consisting of the same oriented Fe_2O_3 film.

The foregoing configuration and material together have been found to provide a markedly long-lived regenerator system. Minor changes such as placing the debris grooves on the seal system rather than on the core have been found to drastically affect this improved operation detrimentally.

During run-in of a rim prepared according to this invention at a temperature in the order of about 800° F. against a mating surface, such as regenerator core **10**, the Fe_3O_4 and loose particles abraded therefrom and oxidized to Fe_2O_3. The loose oxide particles embedded themselves in the trapping material. The result was a substantially continuous Fe_2O_3 film of aligned hexagonal Fe_2O_3 cells on the material working surface with basal planes of the cells oriented substantially parallel to the working surface as shown in FIG. **4***b*.

Run-in or break-in may occur under a wide variety of conditions. The following schedules show a few of the conditions which may be used if a member intended to form a part of a regenerator system of a gas turbine engine is to be broken in. As can be seen from the schedules, break-in may take place in a running fixture or in an actual engine.

Schedule

Running Fixture Time, Mins. Sched. "A"	Sched. "B"	Condition P_3''	T_{30} °F	T_8 °F
15	30	10.7	130	600
15	30	16.6	130	950
15	30	25.7	450	1200
15	30	38.8	450	1200
15	30	55.5	450	1275
15	30	78.5	450	1350
120	120	94.	450	1350

Engine

SCHEDULE "H"

1. 1 hour at idle (23,000-24,000 rpm), T_8—900° to 950°F.
2. 1 hour at 70% speed while matching, T_8—1120° to 1150° to 1200° F.
3. 1 hour at 80% speed, T_8—1200° F.
4. 15 minutes at 90% speed, T_8—1200° F.
5. 15 minutes at 95% speed, T_8—1200° F.
6. 15 minutes at 97 ½% speed, T_8—1200° F.
7. 15 minutes at 97 ½% speed, T_8—1275° F.
8. 15 minutes at 97 ½% speed, T_8—1350° F.

SCHEDULE CONDITIONS DEFINED

P_3'' = pressure in inches of Hg of cold gas entering regenerator as at **24** in FIG. **1**.

T_3°F. = temperature of the cold face of the regenerator as at the outer seal system of the regenerator of FIG. **1**.

T_8°F. = temperature of the hot face of the regenerator as at the inner seal of the regenerator of FIG. **1**.

Having described the invention, what is claimed as an exclusive right therein is as follows:

1. A member particularly adapted for operating under dry lubrication conditions comprising a substrate having a working surface made up of an iron oxide matrix including an interspersed mixture of boron nitride, a component selected from the group consisting of graphite, nickel coated graphite and mixtures thereof and a component selected from the group consisting of sodium sulfate, sodium phosphate, clacium fluoride and mixtures thereof, the interspersed mixture being present in relative amounts sufficient to promote the formation of a substantially continuous outer layer of Fe_2O_3 on the working surface during break-in.

2. The member of claim **1** wherein the interspersed mixture is present in about the proportion by weight of: 1 part boron nitride, 4 parts nickel coated graphite and 4 parts sodium sulfate, respectively.

3. The rubbing member of claim **1** wherein the substrate is a stainless steel.

4. A regenerator section for a gas turbine engine wherein at least two members thereof are adapted for rubbing contact during operation of the engine, one of the members having an initial working surface comprised of an iron oxide matrix containing an interspersed mixture of boron nitride, a component selected from the group consisting of graphite, nickel coated graphite and mixtures thereof, and a component selected from the group consisting of sodium sulfate, sodium phosphate, calcium fluoride and mixtures thereof, the interspersed mixture being present in relative amounts sufficient to promote a transformation in the working surface during a break-in period and form as a result a substantially continuous film of Fe_2O_3 on the word surface of the one member and second film of Fe_2O_3 on the mating member, formed by transfer from the one member thereto.

5. The engine according to claim **4** wherein the initial oxide matrix is substantially made up of Fe_3O_4.

6. The engine of claim **4** wherein the one member is selected from the group consisting of regenerator seal

rims and cross-arms, the mating surface being provided by the regenerator core.

7. The combination of claim 6 wherein the regenerator core mating surface contains a peripheral debris collecting groove and the seal rim and cross arm having a substantially smooth working surface.

8. The combination of claim 7 wherein additional spaced radial grooves are included on the core extending between the peripheral groove and the edge of the core.

9. A member particularly adapted for operating under dry lubrication conditions comprising a substrate having an initial working surface made up of an iron oxide matrix containing an interspersed mixture of about by weight 1–10 percent boron nitride; 10–50 percent of a component selected from the group consisting of graphite, nickel coated graphite and mixtures thereof, and about 5–30 percent of a component selected from the group consisting of sodium sulfate, sodium phosphate, calcium fluoride and mixtures thereof, the balance of the working surface being comprised of the aforesaid iron oxide matrix.

10. The member according to claim 9 wherein the iron oxide matrix is Fe_3O_4.

11. The member according to claim 9 wherein the working surface of the member defined comprises an initial working surface prior to any break-in, the working surface after break-in including a substantially continuous outer layer of Fe_2O_3.

12. The member according to claim 9 wherein the working surface is more particularly characterized as including an interspersed mixture of about 5 percent by weight of boron nitride, about 20 percent by weight of a component selected from the first mentioned group, about 20 percent by weight of a component selected from the second mentioned group, balance being comprised of the aforesaid iron oxide matrix.

13. The member according to claim 9 wherein the component selected from the first mentioned group is nickel coated graphite and the component selected from the second mentioned group is sodium sulfate.

14. A rubbing member comprising a substrate having a working surface inlcuding a substantially continuous outer layer and a matrix between the layer and substrate comprised of iron oxide interspersed with a mixture in about the proportion by weight of 1 part boron nitride, 4 parts of a component selected from the group consisting of graphite, nickel coated graphite and mixtures thereof and 4 parts of a component selected from the group consisting of sodium sulfate, sodium phosphate, calcium fluoride, and mixtures thereof.

* * * * *

UNITED STATES PATENT OFFICE
CERTIFICATE OF CORRECTION

Patent No. 3,747,944 Dated July 24, 1973

Inventor(s) Amedee Roy, et al.

It is certified that error appears in the above-identified patent and that said Letters Patent are hereby corrected as shown below:

On the cover sheet insert -- [73] Assignee: Chrysler Corporation, Highland Park, Michigan --.

Column 4, line 62, change "word" to -- work --.

line 65, change "engine" to -- regenerator section --.

line 67, change "engine" to -- regenerator section --.

Signed and sealed this 26th day of February 1974.

(SEAL)
Attest:

EDWARD M.FLETCHER,JR.
Attesting Officer

C. MARSHALL DANN
Commissioner of Patents

USCOMM-DC 60376-P69
* U.S. GOVERNMENT PRINTING OFFICE : 1969 O—366-334.

74