March 5, 1946. J. B. DYER 2,396,164

DOMESTIC APPLIANCE

Filed Jan. 31, 1940 2 Sheets-Sheet 1

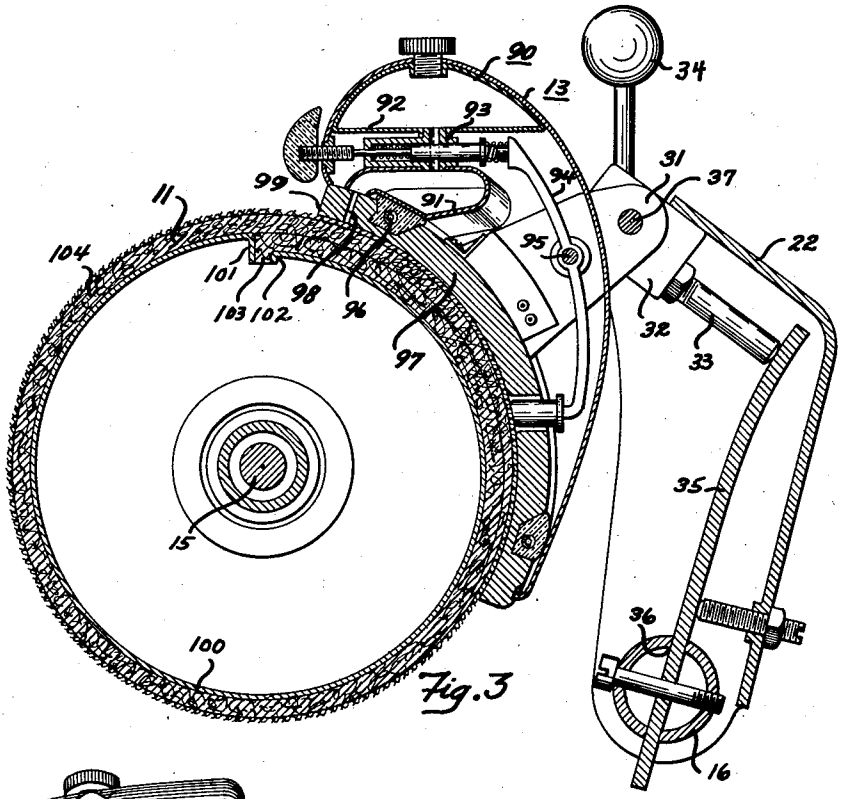

Fig. 3

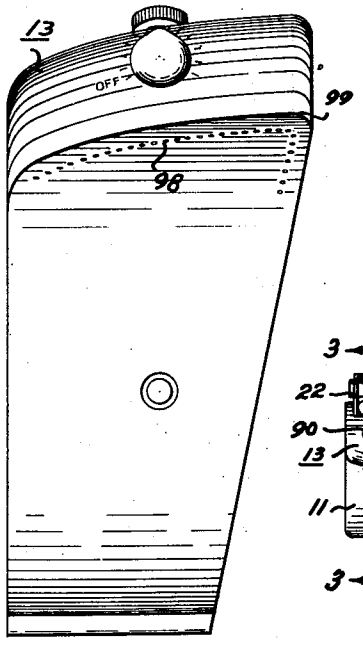

Fig. 4

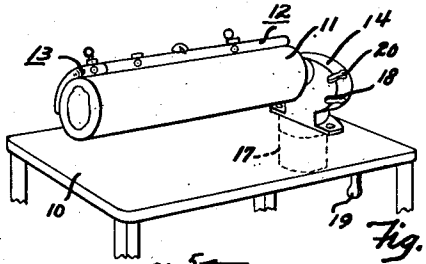

Fig. 1

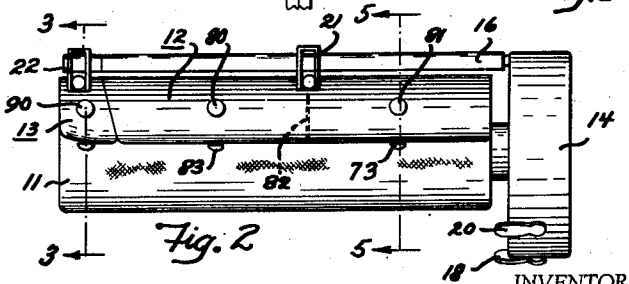

Fig. 2

INVENTOR.
John B. Dyer
BY
Spencer, Hardman and Fehr
ATTORNEY.

March 5, 1946. J. B. DYER 2,396,164

DOMESTIC APPLIANCE

Filed Jan. 31, 1940 2 Sheets-Sheet 2

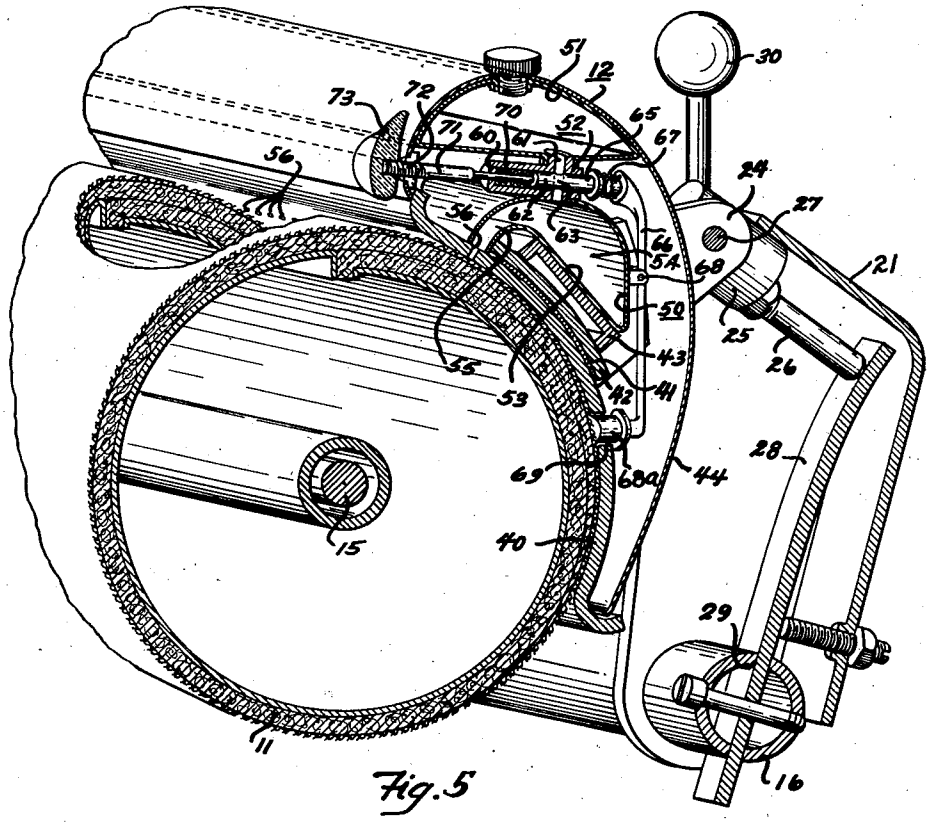

Fig. 5

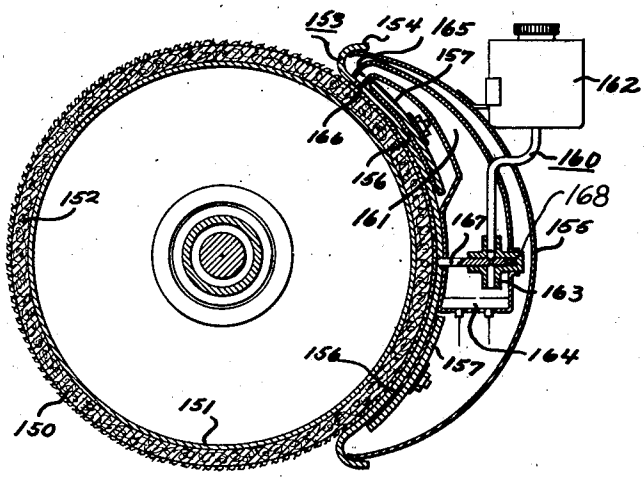

Fig. 6

INVENTOR.
John B. Dyer

BY
Spencer, Hardman and Fehr
ATTORNEY.

Patented Mar. 5, 1946 2,396,164

UNITED STATES PATENT OFFICE

2,396,164

DOMESTIC APPLIANCE

John B. Dyer, Dayton, Ohio, assignor to General Motors Corporation, Dayton, Ohio, a corporation of Delaware

Application January 31, 1940, Serial No. 316,599

7 Claims. (Cl. 38—54)

This invention relates to a domestic appliance and particularly to a machine for ironing or pressing articles of apparel.

An object of this invention is to provide an improved ironing machine wherein articles of apparel are moistened upon entering the pressing area of the machine, and wherein the heating element of the ironing or pressing member of the machine provides means to instantly generate vapor for moistening the apparel.

A further object of the invention is to provide an ironing machine wherein different quantities of moisture can be simultaneously applied to various areas of an article of apparel passing through the machine, the quantity of moisture applied within the individual areas being individually controlled.

A still further and important object of this invention is to provide an improved ironing machine wherein the ironing or pressing shoe is composed of a large major shoe and a small end shoe, said shoes working individually or in cooperation, and wherein a smooth concentric padded surface on the roll of the machine is provided to permit even operating pressure of the shoes upon the roll, whereby the quantity of moisture applied to the articles of apparel passing through the machine can be evenly distributed within a controlled area.

In accomplishing the aforementioned object, it is an object of this invention to provide a padded roll for an ironing machine which will present a smooth substantially concentric working surface by causing the surface pad to be wound upon the roll in a continuously increasing spiral.

Further objects and advantages of the present invention will be apparent from the following description, reference being had to the accompanying drawings, wherein a preferred form of the present invention is clearly shown.

In the drawings:

Fig. 1 is a perspective view of an ironing machine incorporating features of my invention;

Fig. 2 is a plan view of the ironing machine showing the manner in which a plurality of shoes are positioned with respect to the roll of the machine;

Fig. 3 is a transverse cross-sectional view of the small end shoe, taken substantially along the line 3—3 of Fig. 2;

Fig. 4 is a bottom view of the small shoe showing the ironing or pressing surface;

Fig. 5 is a perspective transverse cross-sectional view of the major shoe taken substantially along the line 5—5 of Fig. 2; and

Fig. 6 is a transverse cross-sectional view of a roll and cooperating shoe showing a modified form of the invention.

In this invention, the ironing machine consists of a table 10, a roll or padded member 11, a major shoe 12 and a small end shoe 13. The rotation of the roll or padded member 11 and the movement of the shoes 12 and 13, with respect to the roll 11, is controlled and operated by means of a suitable mechanism enclosed within the housing 14. A drive shaft 15 extends from the mechanism enclosed within the housing 14 and is suitably connected to the roll 11 for rotating the roll according to the operation of the mechanism, which is controlled by the operator of the machine. A rock shaft 16 also extends from the mechanism contained within the housing 14 and is interconnected with the shoes 12 and 13 to cause advancement or retraction of the shoes with respect to the roll 11, under control of the mechanism contained within the housing 14, according to the desires of the operator of the machine.

An electric motor 17 may be positioned below the mechanism housing 14 and be suitably geared to the mechanism contained within the housing 14 for driving the same. The electric motor 17 may be a variable speed type in order to vary the speed of the roll-driving portion of the mechanism and thus vary the speed of rotation of the roll, or a suitable interchange of gear ratios may be provided within the driving mechanism for changing the speed of rotation of the roll 11 when a constant speed motor is used. Either of the speed change functions may be controlled by a hand-operated lever 18.

The interconnection of the driving elements of the drive mechanism with the driven elements of the drive mechanism may be controlled by means of a lever 19. This lever 19 is suitably interconnected with the working mechanism within the housing 14 to control starting and stopping rotation of the roll 11 and for advancing or retracting the shoes 12 and 13 with respect to the roll 11, all of which functions are under control of the operator by movement of the lever 19.

In order to provide for a position wherein the roll 11 will be stationary, but the shoes 12 and 13 or both are advanced against the roll 11, thereby providing a press position, a lever 20 is provided with a suitable interconnection with the mechanism for declutching the roll from the driving portions of the drive mechanism.

All of the aforementioned functions of an ironing machine mechanism are well known in the art and, as examples, suitable mechanisms are

shown in U. S. Patents to Janda 2,026,345, Foley 1,970,511 and Peter et al. 1,921,301, which mechanisms perform one or more of the aforementioned operations.

The shoes 12 and 13 of my ironing machine are mounted upon channel-shaped members 21 and 22 respectively. These channel-shaped members 21 and 22 are, in turn, mounted upon the rock shaft 16. The rock shaft 16 extends from the mechanism housing 14 and is substantially as long as the roll 11. The channel-shaped member 22, which carries the small end shoe 13, is mounted upon the rock shaft 16 near the end thereof, thereby locating the small shoe at the open end of the roll 11. The channel-shaped member 21, which carries the major shoe 12, is mounted centrally upon the shoe 12 which, thereby, centralizes the shoe 12 and the carrying member 21 with respect to the roll 11 to provide an even distribution of pressure of the shoe 12 upon the roll 11.

The shaft 16 may be rocked in the same manner as shaft 20 in Foley 1,970,511 or in the same manner as shaft 32 in Peter et al. 1,921,301. Applicant's lever 19 may perform the same functions as button 122 of Janda 2,026,345 to clutch the roll 11 to the motor 17 and to actuate the shoe rocking mechanism. Applicant's lever 20 corresponds to Janda's lever 102 for the purpose of disconnecting the roll to prevent its rotation; but to allow the rocking of the shoe structure. Applicant's lever 18 may change the speed of rotation of the roll 11 by actuating a two-speed switch controlling the motor 17 in such a manner as to energize different windings of the motor in a manner well-known in the motor control industry.

The loose connection which supports the major shoe 12 upon the channel-shaped carrying member 21 comprises a yoke 24 which is rigidly attached to the shoe 12. The yoke 24 straddles a spacing block 25. A pivot pin 27 extends through the side walls of the channel-shaped member 21, the yoke 24 and the spacing block 25, thereby providing a hinged mounting joint for the shoe 12 and the block 25. An adjustable length pin 26 extends from one end of the block 25 and engages a cantilever spring 28. This spring 28 extends through a slot 29 in the rock shaft 16 and provides the driving connection between the rock shaft 16 and the shoe 12 through the pin and block connections 25 and 26, whereby the shoe 12 is caused to advance or retract from the roll 11 according to the rotation of the rock shaft 16. A handle 30 extends from the upper end of the spacing block 25 which provides means to pivot the block 25 and pin 26 about the pivot pin 27 to cause disengagement of the pin 26 from the cantilever driving spring 28, when it is desired by the operator to relieve the shoe 12 of pressure against the roll 11 so that the shoe 12 will be inoperative in its pressing or ironing function.

A similar hinged joint is provided for supporting the small end shoe 13 upon the channel-shaped carrying member 22. This joint comprises a yoke 31 which straddles a spacing block 32. The block 32 carries an adjustable pin 33 on one end thereof and a handle 34 on the opposite end thereof. The pin 33 engages a cantilever spring 35, which spring extends through a slot 36 in the rock shaft 16. A pin 37 extends through the channel-shaped member 22, the yoke 31 and the spacing block 32, thereby providing a free hinged joint for supporting the shoe 13 upon the channel-shaped member 22 and to provide a pivoted joint for the block 32. The pin 33 may be released from engagement with the cantilever spring 35 by moving the handle 34, causing the block 32 to be rotated about the pin 37. This disengagement of the pin 33 from the cantilever spring 35 releases the pressure of the shoe 13 against the roll 11, so that the shoe will become inoperative.

This arrangement for mounting the shoes 12 and 13 is such that both shoes may be caused to simultaneously engage the roll 11 upon advancement of the shoes by rotation of the rock shaft 16 and function as a single shoe element, or each of the shoes may be individually released of its driving engagement with the rock shaft 16 to permit the other of the shoes to advance against the roll and operate as an individual shoe element. Either of the shoes may thus be used individually for ironing or pressing articles of apparel.

When using domestic ironing machines, it is the usual practice to dampen the articles of apparel prior to the time they are to be ironed upon the machine. This dampening of clothes is usually done by hand and particularly by sprinkling a quantity of water over the articles of clothing. This method of dampening clothes results in considerable uneveness of distribution of moisture upon the articles. When such dampened articles are sent through an ironing machine, the areas of the articles of apparel which have been over-moistened will leave the machine in a dampened condition. Unless the articles are perfectly dry after they leave the machine, they will again wrinkle upon the least movement of the article, particularly in the areas which are still moist.

To relieve this situation, I provide by my invention, means to moisten the articles of apparel as they enter the ironing or pressing areas of the machine, and to provide means whereby the moisture may be evenly distributed over the articles of apparel, or the moisture within certain areas may be changed to meet various material requirements within different areas while the article is passing through the machine.

The shoe 12 of the ironing machine is provided with a face or pressure plate 40, the contour of which is arcuate to match the diameter of the roll 11. An electric heating element 41 is in thermal association with the pressure plate 40. This heating element 41 may be of any of the conventional structures used in ironing machines which usually comprise an electric resistance element positioned between mica insulating members. A metal back plate 42 is positioned over the heating element 41 and is of the same arcuate shape as the pressure plate 40. This back plate member 42 is pressed against the heating element 41 and the element 41 is in turn pressed against the pressure plate 40 by means of a channel-shaped member 43. The back plate 42 and the channel member 43 are thus arranged in thermal association with the electric heating element 41 for the shoe 12. A hood 44 encloses the exposed upper face of the pressure plate 40, heating element 41 and clamping means 42 and 43.

Within the interior of the hood 44, I provide a flash vapor-generating device. This device comprises an elongated vapor-generating tank 50, a liquid reservoir 51 and a control valve 52. Liquid, such as water, is admitted to the vapor-gen-

erating tank 50 from the reservoir 51 under control of the valve 52.

The vapor-generating tank 50 extends throughout the longitudinal length of the shoe 12 and is in thermal transfer relationship with the clamping plate 43 throughout its entire length within the shoe 12. Since the clamping plates 42 and 43 are in thermal association with the heating element 41 of the shoe 12, heat will be conducted through the plates 42 and 43 to the vapor-generating tank 50. Since the wall 53 of the tank 50 is in direct thermal contact with the clamping plate 43, this wall will be at approximately the same high temperature as the heating element 41. Any liquid contacting this wall 53 will be instantly flashed into vapor, thereby filling the internal chamber 54 of the tank 50 with hot vapor. An elongated throat 55 is provided upon the tank 50 and extends throughout the length thereof to permit discharge of vapor from the chamber 54. A plurality of small orifices 56 are provided in the pressure plate 40 of the shoe 12 and adjacent the leading edge thereof. These orifices 56 are in alignment with the throat opening 55 throughout its entire length, and provide means whereby the vapor discharging from the throat 55 is conducted through the pressure plate 40 near the leading edge thereof and between adjacent surfaces of the pressure plate 40 and the roll 11.

The vapor-generating tank 50 with its cooperating throat discharge opening 55 may extend throughout the length of the shoe 12. The cooperating discharge orifices 56 will also extend throughout the length of the shoe and cooperate with the throat discharge opening 55 of the tank 50 to permit an even discharge of vapor through the plurality of orifices over the entire length of the shoe 12. The vapor discharge throat opening 55 and the orifices 56, which cooperate therewith, are so arranged that the vapor is discharged between the pressure plate 40 and the roll 11 at a point nearest the point of entrance of articles of apparel between the pressure plate 40 and the roll 11.

The arrangement of this invention thus provides an apparatus for utilizing the heating element of the ironing shoe as a means for generating vapor or steam to be applied to articles of apparel as they enter the pressure area between the shoe and the roll, to thereby moisten the articles of apparel just prior to the time they are to be ironed.

In order to control the quantity of water passing from the reservoir 51 to the steam-generating tank 50 and thus control the quantity of steam discharged from the apparatus, the control valve 52 is provided. This control valve consists of a body member 60 having an opening 61 passing therethrough to interconnect the reservoir 51 with the steam-generating tank 50. To control the fluid passing through the opening 61, a piston-type plunger 62 is arranged to intersect the opening 61. The plunger 62 is provided with an opening 63 through the body portion thereof. This opening 63 may be caused to be brought into or out of alignment with the opening 61 to thereby control the flow of fluid through the opening 61 and thus control the amount of liquid entering the vapor-generating tank 50.

The piston 62 is slidably mounted within the body 60, and has one end thereof extending from the body 60. This extending end 65, of the piston 62, is resiliently connected to a pivoted lever 66 through a spring 67. The lever 66, pivoted at 68, has one end thereof which engages the spring 67 and has a button 68a mounted upon the opposite end thereof. This button 68a extends through an opening 69 in the pressure plate 40 of the shoe 12, to permit the button to engage the surface of the roll 11 when the shoe 12 is in the advanced position.

A spring 70 is positioned between the enclosed end of the piston and the body 60 of the valve 52. It is thus seen that the piston 62 is a free floating member, the position of which is determined by the respective compression strength of the springs 67 and 70.

To control the degree of movement of the piston 62, and thus the degree of alignment of the opening 63 in the piston 62 with the opening 61 in the body 60, a rod 71 extends through the body 60 and may engage the enclosed end of the piston 62. This rod 71 is provided with a threaded portion 72 and a knob 73 for manually rotating the rod 71. Rotation of the rod 71 will cause advancement or retraction of the end thereof with respect to the opening 61 in the body 60 and will thus control the degree of movement of the piston 62 and thus the alignment of the opening 63 in the piston 62 with the opening 61 in the body of the valve 52. This manual control of the alignment of the openings 61 and 63 provides means to accurately control the quantity of water flowing from the reservoir 51 to the steam-generating tank 50 and thus the quantity of steam which can be applied to the articles of apparel passing through the ironing machine.

In view of the fact that the usual temperature of operation of a heating element on an ironing machine is in the neighborhood of 350° F., it may be readily seen that if water is fed in droplets to a surface heated to this temperature, the drops of water will be instantly flashed into a vapor. This manual control of the alignment of the openings 61 and 63 in the control valve 52 determines the rate at which the drops of water are fed onto the hot surface of the steam generator 50 and thus controls the quantity of steam generated. By this arrangement of the vapor generator, it is possible to have a supply of moisture available as soon as the shoe of the ironing machine reaches its working temperature.

When the shoe 12 is in the retracted position with respect to the roll 11, the button 68a mounted upon the arm 66 can move through the opening 69 in the pressure plate 40. The arm 66 will then rotate about its pivot 68, due to the pressure of springs 70 and 67 exerting their pressure against the upper end of the arm 66. Movement of the upper end of the arm 66 will relieve the compression of spring 67 and permit the spring 70 to move the piston 62 outwardly, whereby the opening 63 in the piston 62 will be moved out of alignment with the opening 61, thereby stopping the flow of liquid from the reservoir 51 to the vapor-generating tank 50. As long as the roll is in retracted position, vapor cannot be generated within the tank 50. However, upon advancement of the shoe 12 with respect to the roll 11, the arm 66 will be moved to compress spring 67, the compression of which will overcome the compression of spring 70, whereby the opening 63 will be again brought into alignment with the opening 61; the degree of alignment of the two openings 61 and 63 being determined by the position of the end of the rod 71.

As disclosed in the drawings, with particular reference to Figs. 1 and 2, it will be noted that I have shown two steam-generating devices being

positioned within the major shoe 12. These steam-generating devices are located at positions 80 and 81 respectively and are divided by a partition wall 82. Each of the steam-generating devices is under individual control by means of the manipulating knobs 83 and 73. This arrangement provides means whereby the degree of moisture applied to articles of apparel passing through the machine may be varied over certain areas.

I have also disclosed a separate steam or vapor-generating device 90 positioned within the small end shoe 13. This third device provides an additional area which has individual control over the degree of moisture applied to the articles of apparel passing therethrough.

The steam-generating device 90, provided in the small shoe 13, is similar in all respects with the steam-generating device heretofore described and positioned within the major shoe 12. The device 90 comprises a steam or vapor-generating chamber 91, a liquid reservoir 92 and a control valve 93. The control valve 93 is operated by means of an arm 94 pivoted at 95 and functions in all respects the same as the liquid control valve 52. The flash vapor or steam-generating chamber 91 is, however, shown in the small shoe 13 as being in direct thermal association with the heating element 96 of the pressure shoe 97. Suitable orifices 98 are provided in the pressure plate 97 to conduct the vapor from the steam-generating chamber 91 to between adjacent surfaces of the pressure plate 97 and the roll 11.

The small end shoe 13 is provided with an oblique point 99, the orifices 98 following the general contour of the oblique point 99 whereby a greater number of orifices occur at the oblique point, thereby providing the greatest quantity of moisture at the point of the shoe. The arrangement of steam orifices is such, in the small shoe 13, that the point of greatest usage obtains the greatest amount of moisture.

In order to provide an even distribution of moisture over the articles of apparel as they are passing through the ironing machine, it is necessary that the moisture-exuding orifices in the shoes be retained in close contact with the surface of the roll at all times. It is thus, necessary that both the large and small shoes ride evenly and smoothly over the padded surface of the roll 11. If, for any reason, there are any irregularities in the padded surface of the roll 11, the shoes 12 and 13, and particularly the small shoe 13, will be caused to ride momentarily in a higher position than normal when the irregularity enters the shoe, thereby raising the front end of the shoe, relieving the pressure of the shoe upon the roll and permitting moisture to escape.

To provide a smooth and substantially concentric surface on the padded surface of the roll 11, whereby the shoes 12 and 13 may be caused to ride in a constant plane, the pad material for the roll is wound upon the sheet metal base of the roll in a continuously increasing spiral. The roll consists of a tubular sheet metal member 100 which has a surface contour formed as one convolution of a spiral. The degree of spiraling of the sheet metal member 100 is equal to the thickness of the pad which is to be wound upon the roll. The ends of the sheet metal roll member 100 are bent inwardly of the roll, thereby forming flanges 101 and 102. The starting end 103 of the pad member 104 is clamped between the flanges 101 and 102, thereby securely fastening the same to the roll 100.

When the pad 104 is then wound about the surface of the sheet metal member 100, the first consecutive layer of pad material will rest directly upon a concentric surface when the pad material reaches the starting point of winding, since the depth of the recess in the sheet metal member is equal to the pad thickness. The pad member may continue to wind upon the roll and form subsequent layers of material until the desired thickness of pad has been reached. After the desired number of layers of pad material have been placed upon the roll, the end of the pad material is cut or frayed into a long taper, so as to eliminate any sharp definition of the end of the pad winding. The outer cloth material may then be wound about the roll to retain the pad in position.

This arrangement, in the manner of constructing a padded roll surface, provides a construction whereby any irregularity, due to the starting point of the pad, is eliminated. It is desirable that the starting of the pad winding be securely fastened in place to prevent the pad from slipping around the roll. This is hardly practical when a long tapered forward starting edge of the pad is provided, since the degree of fastening to the thin tapered or frayed edge is of insecure nature. It is thus seen that I have provided a roll structure which will permit the finished padded surface of the roll to be retained in a substantially concentric form and will eliminate all irregularities in the padded surface of the roll and will permit the shoes of the ironing machine to ride evenly and with constant pressure upon all areas of the padded surface.

In Fig. 6, I have shown a modified form of my invention wherein the vapor or steam-generating device is carried by a shoe of the ironing machine so that it will be advanced or retracted from the roll of the machine when the shoe is advanced or retracted, so that movement of the shoe controls the functioning of the vapor or steam-generating device. This function is similar in all respects to the function of the device heretofore described.

In this modification, however, the roll 150 of the ironing machine comprises a metal cylinder 151 and a pressure pad 152 suitably attached to the roll 151. An ironing or pressing shoe 153 is provided adjacent the roll 150 and is suitably attached by means (not shown) to a rock shaft which advances or retracts the shoe with respect to the roll, according to the functioning of the driving mechanism of the ironing machine.

The shoe 153 comprises a pressure plate 154 and an enclosing housing 155. Heating elements 156 are placed in thermal relationship with the pressure plate 154 and are retained in this relationship by means of the back plates 157. A vapor or steam-generating device 160 comprising a vapor or steam-generating chamber 161, a liquid reservoir 162, a control valve 163 and a heating element 164 is mounted upon the ironing shoe 153 and carried thereby. The vapor or steam-generating chamber is provided with a throat discharge opening 165 through which vapor discharges through orifices 166 positioned in the pressure plate 154 near the leading edge thereof. Vapor generated within the chamber 161 is thus applied to articles of apparel entering between the shoe 153 and the roll 150.

The amount of vapor or steam generated by the steam-generating chamber depends upon the quantity of liquid vaporized by the heating element 164. The amount of liquid which enters the chamber is controlled by means of the valve 163. This valve 163 is provided with a pin 167

extending from the body portion thereof which engages the surface of the roll 150 when the shoe is in the advanced position against the roll. This pin intersects an opening through which liquid from the reservoir 162 must pass in its flow through the valve 163.

When the shoe is in retracted position with respect to the roll, the pin 167 is moved outwardly, or to the left by spring 168, to permit an opening through the pin to break alignment with the liquid passage through the valve 163, thereby stopping the flow of liquid through the passage. As long as the shoe is in the retracted position, liquid cannot flow into the steam or vapor-generating chamber 161 and thus no moisture will be discharged through the openings 166 in the pressure plate 154. When the shoe is advanced against the roll, the pin 167 will move inwardly, or to the right, to permit alignment of an opening through the pin with the liquid passage through the valve 163. The alignment of the passages in the pin and valve will permit liquid to drop upon the heating element 164 which will immediately vaporize the same, filling the chamber 161 with steam. The steam will discharge through the throat 165 and the orifices 166 to be applied to articles or apparel passing between the shoe 153 and the roll 150.

When it is desired to iron clothes, the same are placed between the roll 11 and the shoe structures 12 and 13. If flat work is to be ironed, the knobs 30 and 34 of the shoes are pulled forward, and the handle 18 is actuated. This causes rotation of the roll and causes both shoes to be brought forward into contact with the roll. At this time, the levers 66 and 94 are rocked causing introduction of liquid from the liquid chambers 51 and 90 into the vaporizing chambers 50 and 91. The vapor flows through the openings 56 and 98 onto the flat work and aids in the ironing operation. If the speed of rotation of roll 11 is to be increased the lever 18 is actuated either to increase the speed of the motor 17 or to change the transmission in casing 14 to provide for the change in speed of roll 11. If it is desired to press the clothes without relative rotation of the roll 11, the lever 20 only is actuated and this brings the shoes into contact with the stationary roll 11. If it is desired to iron collars or other small articles, the knob 30 of shoe 12 is pushed back while the knob 34 of shoe 13 is pulled forward. Thereafter the lever 19 is actuated, whereupon the roll 11 rotates and the shoe 13 is brought forward into engagement with the roll. As it comes into engagement, the lever 94 is rocked to introduce liquid from the liquid chamber 90 into the vaporizer 91 to moisten the articles being ironed.

By the arrangement disclosed in my invention, I have provided a greatly improved form of clothes moistening device, in that the operation of the device is entirely automatic, being carried by the shoe of the ironing machine and being governed in its operations by movement of the shoe with respect to the roll, and wherein the degree of moisture of the articles of apparel may be controlled within certain areas of the machine. The clothes moistening device is also particularly advantageous in that it can utilize a source of heat from the ironing machine which is always available and which source is always of sufficient temperature to generate vapor when liquid is brought into contact with a surface heated by source. Since I have provided a roll which has a smooth revolving surface and substantially concentric in circumference, and since the pressure of the shoe upon the roll will always be constant, in view of the evenness of the contour of the roll, I am thus able to control exactly the degree of moistness of articles of apparel passing between the shoe and the roll.

While the form of embodiment of the invention as herein described constitutes a preferred form, it is to be understood that other forms might be adopted, all coming within the scope of the claims which follow.

What is claimed is as follows:

1. An ironer comprising a padded roll, a major shoe in operative association therewith, a small shoe adjacent the end of the major shoe in operative association with said roll and adapted to be operated in unison with said major shoe and engage said roll simultaneously with said shoe, individual means for heating said shoes, means in thermal association with each of said heating means to vaporize a liquid for supplying vapor between adjacent faces of said shoes and said roll, said roll having a pad wound upon a spirally shaped tubular base member to provide a surface on said roll which is smooth and substantially concentric whereby said shoes are enabled to ride evenly upon the surface of said roll when said roll is rotated to evenly distribute vapor throughout defined areas.

2. An ironing machine comprising a padded roll, a shoe, a heating element for said shoe, means for changing the operative relationship of said shoe with respect to said roll, a shield forming an insulating space in the rear of said shoe, a light reservoir supported by said shoe in said insulating space, a vapor-generating chamber in said insulating space in thermal exchange relationship with said heating element, valve means interconnecting said reservoir and said vapor generator, means for controlling operation of said valve means in response to operation of said shoe, and means for conducting vapor from said generator to between adjacent faces of said roll and said shoe.

3. An ironer comprising a padded member, a shoe in operative association therewith, actuating means for causing relative to and fro movement between said shoe and padded member, vapor introducing means for introducing vapor between adjacent surfaces of said padded member and shoe, and a movable button carried by said shoe and moved relatively to said shoe by contact of said button with said padded member for controlling said vapor introducing means.

4. An ironer comprising a padded member, a shoe in operative association therewith, actuating means for causing relative to and fro movement between said shoe and padded member, vapor generating means, means for introducing vapor from said vapor generating means between adjacent surfaces of said padded member and said shoe, liquid introducing means for introducing liquid into said vapor generating means, and a movable button carried by said shoe and moved relatively to said shoe by contact of said button with said padded member for controlling said liquid introducing means.

5. An ironer comprising a padded member, a shoe in operative association therewith, actuating means for causing relative to and fro movement between said shoe and padded member, vapor introducing means for introducing vapor between adjacent surfaces of said padded member and shoe, and means carried by said shoe and having a button operated by contact of said but-

ton with said padded member for controlling said vapor introducing means.

6. An ironer comprising a rotatable padded roll ironing member, a shoe ironing member, means to cause relative movement to and fro between said members, said shoe member including a face plate having an arcuate transverse cross-section, an enclosing housing mounted on the rear side of said face plate and forming an insulating space, a liquid holding tank in said insulating space, a vaporizing chamber in said insulating space, electric heating means for heating said face plate and for heating a vaporizing surface in said vaporizing chamber, liquid flow means connecting said tank and chamber, a valve in said liquid flow means, and a device actuated by movement of said ironing members together to open said valve.

7. An ironer comprising a rotatable padded roll ironing member, a shoe ironing member, means to cause relative movement to and fro between said members, said shoe member including a face plate having an arcuate transverse cross-section, an enclosing housing mounted on the rear side of said face plate and forming an insulating space, a liquid holding tank in said insulating space, a vaporizing chamber in said insulating space, electric heating means for heating said face plate and for heating a vaporizing surface in said vaporizing chamber, liquid flow means connecting said tank and chamber, a valve in said liquid flow means, and a device carried by said shoe ironing member having a button actuated by contact with said roll ironing member for controlling the opening of said valve.

JOHN B. DYER.