Nov. 10, 1964 H. RUSKIN ETAL 3,156,058

CAP

Filed March 1, 1961

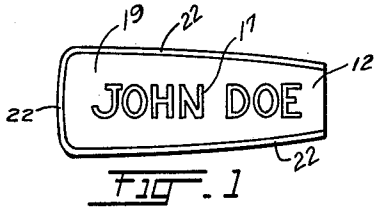

Fig. 1

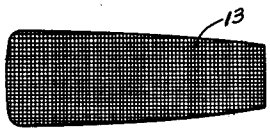

Fig. 2

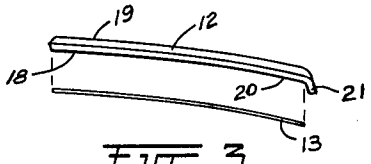

Fig. 3

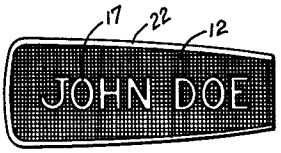

Fig. 4

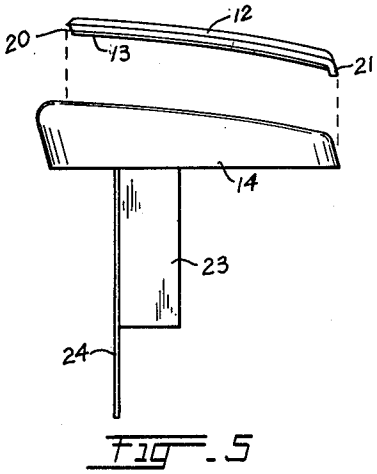

Fig. 5

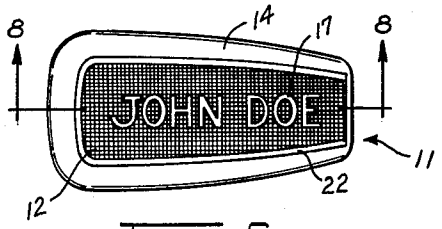

Fig. 6

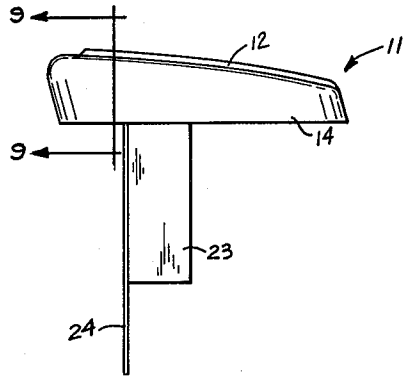

Fig. 7

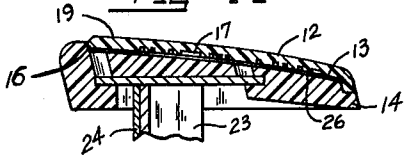

Fig. 8

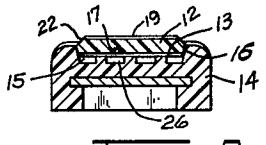

Fig. 9

INVENTORS.
HENRY RUSKIN
ERNEST S. VIOLA

BY

J. Walter Bade

ATTORNEY

United States Patent Office 3,156,058 Patented Nov. 10, 1964

3,156,058

CAP

Henry Ruskin, Bayside, and Ernest S. Viola, Westbury, N.Y., assignors to Swingline Inc., Long Island City, N.Y., a corporation of New York

Filed Mar. 1, 1961, Ser. No. 92,616
5 Claims. (Cl. 40—331)

This invention relates to a cap and a method of making the same. The cap of this invention finds particular application when utilized as the driver actuating portion of a stapling machine. The cap construction of the instant invention may also be employed for typewriter keys, push buttons or any other application where indicia are borne by a member and where permanency is desired.

The cap of the instant invention is simple and inexpensive to manufacture. The parts of the cap are held to one another permanently and durably. Mechanical impact upon the cap will generally not break it and the indicia are permanently readably and protectively disposed upon the cap at all times.

Other objects and advantages of the instant invention may also become apparent to the reader of this specification.

The cap of the instant invention may be briefly described as comprising a body member having a recess therewithin and a top member having indicia thereupon disposed within said recess and adhesively secured thereto. The cap is preferably made of a plastic, preferably a dissolvable thermoplastic material, and the top member of the cap is preferably made of a transparent plastic. Raised indicia are preferably cut into the cap portion extending upwardly from the lower surface thereof, a layer of solvent dissolvable paint is disposed upon said lower surface, and an intermediate member preferably intervenes the top member and the bottom of the recess within the body member.

The method of forming the cap of the instant invention may be briefly described as comprising the steps of obtaining an intermediate member impervious to the action of a solvent, which solvent should have the capacity of at least partially dissolving the paint layer upon the lower face of the top member of the body member. The intermediate member is then impregnated with the solvent and placed in abutting relationship with the painted surface of the top member. The solvent is thereafter applied to the securable surfaces of the top member and the body member, and the surfaces are placed in abutting relationship until adhesive securement of the parts to one another is obtained.

The invention will be further described by reference to the accompanying drawings which are made a part of this specification.

FIG. 1 is a top plan view of the top member of this invention.

FIG. 2 is a plan view of the intermediate member of this invention.

FIG. 3 is a side exploded perspective view of the top member and the intermediate member of this invention.

FIG. 4 is a plan view of the top member and intermediate member of this invention with the parts in assembled relationship.

FIG. 5 is a side exploded perspective view of the top member, intermediate member and body portion of the instant invention.

FIG. 6 is a top plan view of the top member, intermediate member and body portion of the instant invention in assembled relationship.

FIG. 7 is a side view of the instant invention utilized as a cap for a stapling machine.

FIG. 8 is a sectional view of the form of the invention shown in FIG. 6 taken along lines 8—8 of FIG. 6.

FIG. 9 is a sectional view of the form of the invention shown in FIG. 7 taken along lines 9—9 of FIG. 7.

Referring now to the form of the invention shown in the accompanying drawings for a detailed description thereof, the cap 11 of this invention is formed with a top member 12, an intermediate member 13, and a body portion 14. Body portion 14 is formed with a recess 15 which is open at the top thereof and is formed with a bottom 16 and side portions 26.

Top member 12 bears indicia 17 (consisting in the modification shown of the words "JOHN DOE") which indicia are cut into the lower face 18 of top member 12 and extend upwardly therefrom but do not project through the upper face 19 of top member 12. Top member 12 also has a paint layer 20 below its lower surface 18 thereof and a downwardly extending tail portion 21 at the rear thereof. Top portion 12 is also formed with side portions 22.

Body portion 14 of cap 11, in the modification shown in the drawings, is utilized as a cap for a stapling machine and bears a support portion 23 and a driver 24 secured thereto. However, it is pointed out, that the cap construction of this invention could also be applied to other devices by obvious modifications of the construction thereof.

Body portion 14 of cap 11 is preferably made of cellulose acetate butyrate resinous material and top member 12 made of the same material. In the preferred modification top member 12 is substantially transparent.

Intermediate member 13 is preferably made of a fibrous material such as cotton, paper and the like. Generally intermediate member 13 is woven into such design as will serve as proper background material for indicia 17.

With the foregoing description of the instant invention, the method of making the same will now be explained.

Body portion 14 is prepared with a recess 15 therewithin, top portion 12 with indicia cut thereupon, and intermediate portion 13 are also prepared. Top member 12 is thereafter painted on its lower surface preferably with a conventional lacquer paint so that the indicia 17 appear to have a three-dimensional aspect within top member 12. The above steps are conventional and well known in the art. Intermediate member 13 is then dipped into a material which will partially dissolve paint layer 20 and is applied, in a proper fixture, to paint layer 20 so that, where intermediate portion 13 has a woven effect, top member 11 will take the woven appearance of intermediate portion 13 as indicated in FIG. 4.

Where the paint used constitutes a lacquer, acetone is the solvent employed.

The application of intermediate member 13 to top member 12 must be very carefully done and both portions should be brought together at right angles to their longitudinal axes and carefully.

After the above assembly is carried out, and where cellulose acetate butyrate is employed as the plastic, ethyl acetate is then applied to the side portions 22 of top member 12 and to the bottom and side portions of recess 15. This step partially dissolves the plastic. The parts are then carefully brought together in a fixture at right angles to their longitudinal axes and held into position until adhesive securement of all three members is obtained.

Before concluding this specification some of the terms used herein and in the appended claims must be specially defined since the meanings used are somewhat at variance with the technical definitions thereof.

The term "dissolvable," as used to define the paint used herein, means that the adhesion of the paint to the surface upon which it is applied may be broken.

The term "dissolvable" as used to define the plastic

which is used to manufacture parts of the instant invention, means that such plastic can be softened and made sticky so that one member can be adhered to the other member.

The term "solvent," as used in this specification, means a material which can break the adhesion of the paint to the surface to which it is applied and/or which can soften the plastic parts of the instant invention.

The foregoing specific modifications of the instant invention as set forth in the specification herein are for illustrative purposes and for purposes of example only. Various changes and modifications may obviously be made within the spirit and scope of this invention and would occur to those skilled in this art.

We claim:

1. A cap comprising a body member of resinous material having a recess therewithin, a substantially transparent top member of resinous material overlying said body member and adhesively secured thereto, said top member having an upper face, a lower face, indicia cut out of said lower face but beneath said upper face, a dissolvable paint layer beneath said indicia; and a non-dissolvable intermediate member impregnated with a paint dissolving solvent intervening said top member and said body member.

2. A cap comprising a body member of resinous material having a recess therewithin, a substantially transparent top member of resinous material overlying said body member and adhesively secured thereto, said top member having an upper face, a lower face, indicia cut out of said lower face but beneath said upper face, and a dissolvable paint layer beneath said indicia; and a downwardly extending tail portion, and a non-dissolvable intermediate member impregnated with a paint dissolving solvent intervening said top member and said body member.

3. A cap comprising a body member of resinous material having a longitudinally disposed recess therewithin, a substantially transparent top member of resinous material overlying said body member and adhesively secured thereto, said top member having an upper face, a lower face, indicia cut out of lower face but beneath said upper face, an acetone dissolvable paint layer between said indicia and a non-acetone-dissolvable but acetone impregnated intermediate member intervening said top member and said body member.

4. A cap comprising a body member of cellulose acetate butyrate resin having a longitudinally disposed recess therewithin, a substantially transparent top member also of cellulose acetate butyrate resin overlying said body member and adhesively secured thereto, said top member having an upper face, a lower face, indicia cut out of said lower face but beneath said upper face and a lacquer layer beneath said indicia, a woven fiber acetone impregnated intermediate member intervening said top member and said body member.

5. A cap comprising a body member of thermoplastic resinous material having a longitudinally disposed recess therewithin, a substantially transparent top member also of thermoplastic resinous material overlying said body member and adhesively secured thereto, said top member having an upper face, a lower face, indicia cut out of said lower face but beneath said upper face and a paint layer beneath said indicia; and a paint dissolving solvent impregnated fiber intermediate member intervening said top member and said body member.

References Cited by the Examiner

UNITED STATES PATENTS

1,918,243	7/33	Bergaud.	
1,974,682	9/34	Margoshes	40—331 X
2,214,030	9/40	Pereles.	
2,294,159	8/42	Calabro	154—118
2,295,468	9/42	Haley	40—332
2,338,189	1/44	Libby et al.	154—118
2,733,526	2/56	Blay	40—331

JEROME SCHNALL, *Primary Examiner.*

E. V. BENHAM, *Examiner.*