Aug. 1, 1939. J. GLASKER 2,167,926

TRAVELING KIT

Filed June 7, 1937 2 Sheets-Sheet 1

Fig. 1

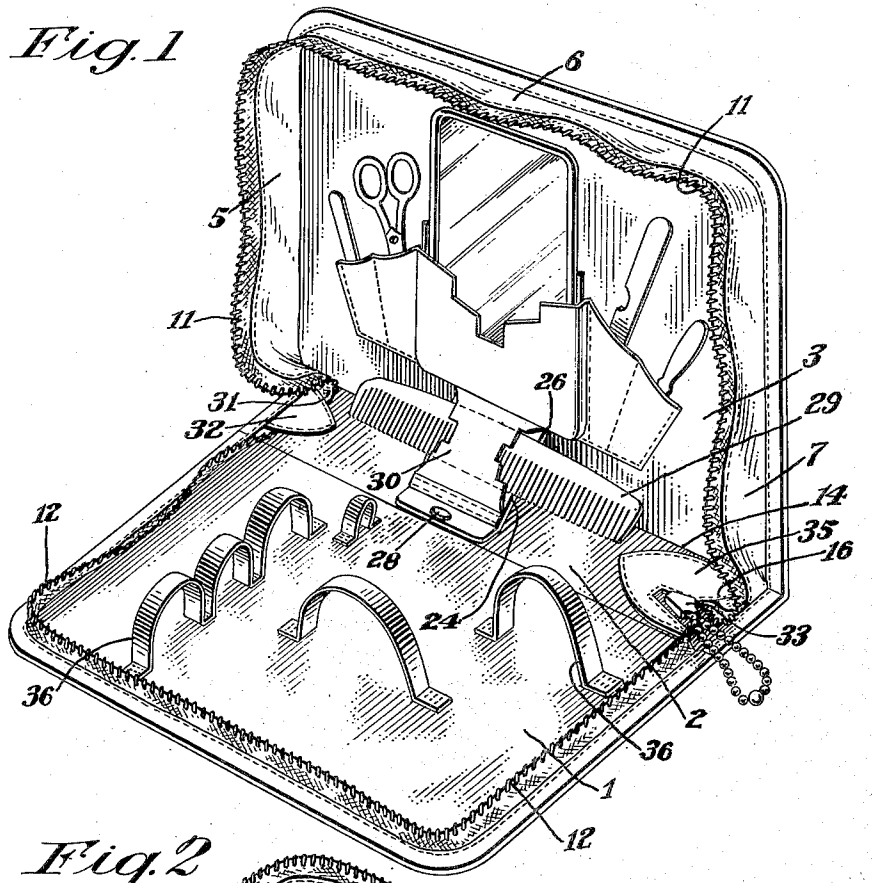


Fig. 2

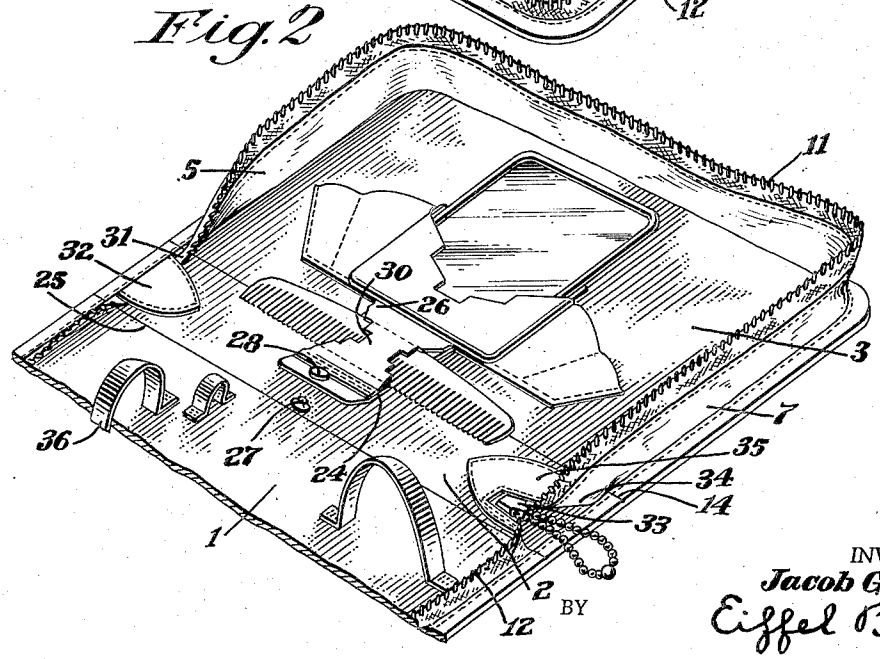


INVENTOR.
Jacob Glasker
BY
Eiffel B. Gale
ATTORNEY.

Aug. 1, 1939. J. GLASKER 2,167,926

TRAVELING KIT

Filed June 7, 1937 2 Sheets-Sheet 2

Fig. 3

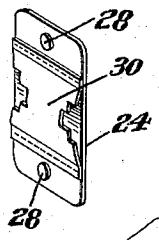


Fig. 4

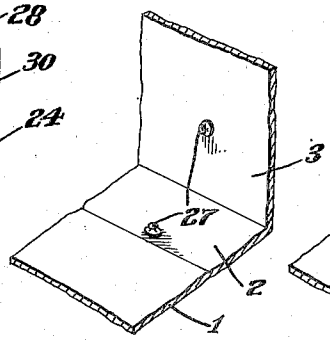


Fig. 5

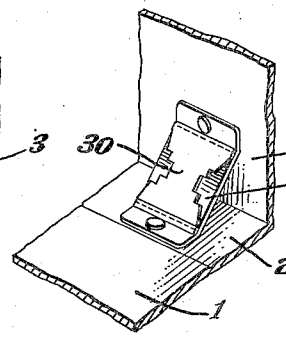


Fig. 6

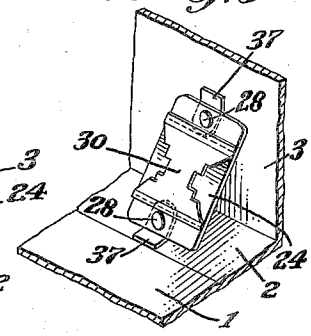


Fig. 7

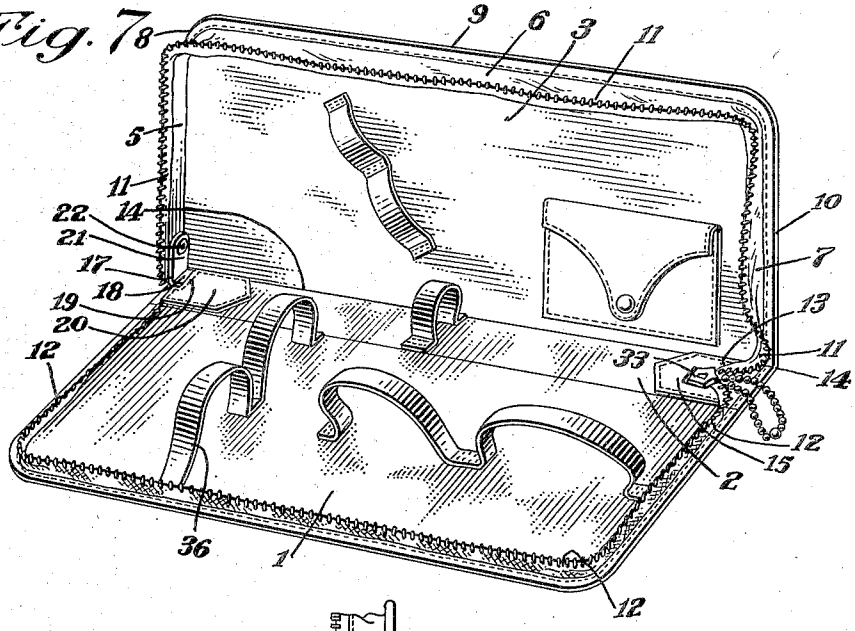


Fig. 8

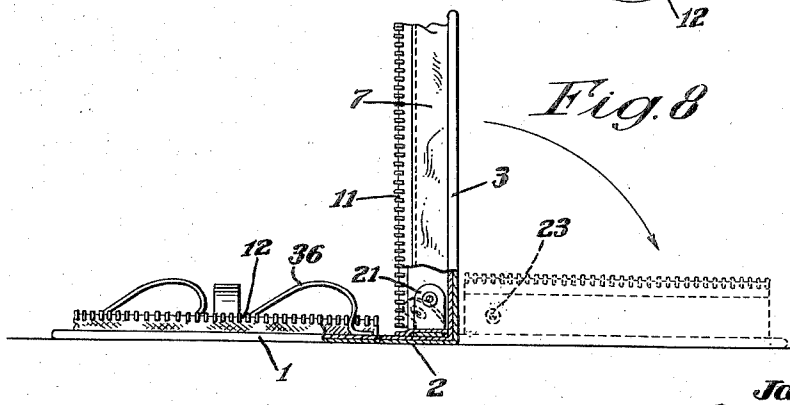


INVENTOR.
Jacob Glasker

BY Eiffel B. Gale

ATTORNEY.

Patented Aug. 1, 1939 2,167,926

# UNITED STATES PATENT OFFICE

2,167,926

## TRAVELING KIT

Jacob Glasker, Boston, Mass., assignor to Corliss Manufacturing Co., Boston, Mass., a corporation of Massachusetts

Application June 7, 1937, Serial No. 146,735

9 Claims. (Cl. 132—79)

This invention relates generally to toilet and traveling kits or cases and relates more particularly to cases generally known in the trade as a "book type" comprising a top, a bottom, one edge of each of which is connected to opposite sides of a back strip in such a manner as to permit, when the case is open, the top, back strip and the bottom of the case to lie flat upon a supporting surface so that all three members may lie in substantially the same plane. In such a book type of case, in normal use, both the top and the bottom may be moved about the lines of hinged or pivotal connection with the back strip, in opening or closing the case.

In display of the cases and contents, for sales purposes, it is at times desirable to provide means for adjustably or temporarily supporting either the top or bottom in upstanding or erect position. In addition to facilitating display of the case and contents when one part is held in upright position, an additional advantage is that the counter space occupied by the upstanding case is conserved, because only about one-half of the space is required for the case with one side upstanding as compared with the space required when the case is open with the top, back strip and bottom lying in the same plane.

In certain cases of the book type heretofore used it has been common practice in the trade to provide a zipper type of fastener between the top and bottom, which zipper fastener extends about the edges of such top and bottom members in a manner such as indicated in Patent No. 2,038,319, dated April 21, 1936. Dependent upon the particular use of the case and the character and location of the articles in the top or bottom of the case the particular location or spacing of the zipper fastener with reference to the top or bottom of case may be varied from a position equally spaced from the top or bottom, to other positions in which the zipper connection is unequally spaced so as to be in closer relation to either the top or the bottom. If the larger and relatively heavier articles are placed or held as by straps on the bottom of the case, the articles may be more readily withdrawn if the zipper is unequally spaced between the top and bottom so as to provide a relatively narrower strip or side wall about the base or bottom of the case; in some instances, the fabric backing or strip of one portion of the zipper may be stitched or otherwise secured directly to the bottom so that substantially the entire width of the side wall closing the space between the top and bottom, extends about the edge of the top member. Such a case may be said to be a box type of case with a cover turned upside down with the top serving as a base to carry the heavier pieces of the toilet set, and with the box portion on top when the case is closed. Whether or not the upper box-like part is pivotally swung about the rear edge of the base, so as to stand in an upright position, or whether the top may be swung back about a pivotal or hinged connection with the back strip to lie flat is determined by the particular manner or angle at which the ends of the side portions are connected or stitched to the back strip, if connected at all. This involves matters of practical importance in the manufacture of the case and relates particularly to the type of machine used and the facility or inconvenience with which the stitching operation may be performed in making cases of either the "book type" or the "box type." If the ends of the side walls are secured to the back strip in the manner disclosed in Patent No. 2,038,319, without the use of the rigid angle pieces, the top may be swung about the hinged connection at the upper edge of the back strip so as to lie flat in the same plane with back strip and base.

Heretofore, in the practical manufacture of cases of either the "book type" or the "box type", or, cases of the permanent stand-up type, such as the "box type" turned upside down, in which the nominal cover or top serves as a base or bottom, as exemplified in Patent No. 2,062,237, the particular problems of manufacture or character of case involved, arises out of the specific, permanent arrangement and relation between the back strip and the particular disposition of ends of the side portions relative back strip, and the top or bottom.

One of the objects of this invention is to provide dual or duplex type of case that may be readily converted from a "book type" of case in which, when open, the top, back strip and base may lie flat, to a case having the stand-up characteristic of a "box type" case in which the box is reversed so that what would normally be called the cover or top serves as the base or bottom.

A further object is to provide a case which may be manufactured and stitched with the facilities of a flat or book type of case, but may be readily changed or converted from a type of case, which when open, lies flat to a stand-up type.

A further object is to provide an improved book type of zipper case having a top, back strip, bottom and side walls, in which only one end of the side walls carrying the zipper fastener is stitched or otherwise secured to the back strip, the other end of the side walls being free and having no attachment or connection with the back strip, when the case is opened with the top, back strip, and bottom in the same plane.

A further object is to provide in a case of the book type having a top, back strip, and bottom adapted to lie flat when open, an independent means forming no essential integral part of the book type case proper, whereby the book type

case may be readily changed to a stand-up box type of case.

A further object is to provide a simple and improved construction for cases employing a zipper type of fastener whereby the case may be readily changed from a case, which when open, is of the flat "book type" case to a stand up "box type" case, the construction being such that in both types, only a relatively narrow side wall or strip around the free edge of the base or bottom may be used in order to facilitate the convenient sidewise withdrawal or removal of articles held by tapes or straps on the base.

Generally stated, the above objects are accomplished and objections to prior art structures overcome by providing in a book type of case an independent member having one portion attached to the case independent of the side walls of the case, and another portion provided with a detachable connection preferably a snap button adapted for connection with the top in such a manner that the top may be held in upright position. It is desirable that parts be so disposed relative to the snap connection that the forces effective through the independent attaching member do not serve or tend to disengage the snap members. If desired, the independent fastening member may be arranged wholly independent of the side walls, and may serve to perform an additional function as a holder or support for one or more of the articles carried by the case.

An additional advantage of a case possessing the dual character of a book type and box type case is that on certain occasions such a case may serve as a book carrier or cover; of course, when so used, the larger pieces of the toilet case would not be used.

In the accompanying drawings, one practical embodiment and certain modified forms are shown for purposes of illustration:

Fig. 1 is a perspective view showing a book type zipper case with the top held in upright position, the independent fastening means also serving as a holder for one of the toilet articles.

Fig. 2 is a perspective view with a portion of the bottom broken away, showing a book type case in open flat position with back strip and top in the same plane.

Fig. 3 is a perspective view of an independent member for holding the top of a book type case in upright position, said member having detachable means at each end thereof.

Fig. 4 is a fragment of the bottom, back strip and top showing the top in upright position, together with one arrangement of the dome portions of the snaps.

Fig. 5 is a fragment of the top, back strip and bottom, showing a top hold-up device detachably connected at each end and disposed intermediate the ends of the back strip.

Fig. 6 is a fragment similar to that shown in Fig. 5, but with the detachable snaps so disposed as to withstand maximum strains and to minimize possibility of accidental separation under slight forces.

Fig. 7 is a perspective of a case showing a modified form of hold-up device enabling an open flat case of the book type to be changed to one having the top stand-up characteristic of the box type case with the back strip and the bottom or case in the same plane.

Fig. 8 is a side view of the case shown in Fig. 7 partly in section with the side wall broken away, and showing in dotted lines the position of the top when a case of the book type is opened to the usual flat position. The independent hold-up tab is also shown in dotted lines detached from the side wall.

In the drawings a case of the book type is shown as including a base or bottom 1, a top 3, and a back strip 2. The top 3 and the bottom 1 are hingedly or pivotally connected to opposite sides of the back strip in a suitable manner well known in the art so that the specific details of such construction are not herein shown or described. Generally stated, it may be said one usual method of construction in the manufacture of toilet cases of the book type is to provide separate pieces of relative stiff flat material, such as pressed board, cord or fibre board, to serve as the bottom 1, back strip 2, and top 3; these parts are placed in proper relation and covered with a flexible fabric or other suitable material, such as leather, imitation leather, or the like. The parts and covering may be retained in proper relative position by suitable means appropriate to the materials used, such, for example, as by stitching, paste cement, or other securing means.

The flexible or readily yielding covering material may serve as the hinged or pivotal connection to permit relative swinging movement of the top and bottom about the lines of hinged connection at opposite sides of the back strip to enable such parts of the "book type" case to lie flat.

One of the features that characterize a case known as a "book type" of case is that of being able to pivotally swing both the top and bottom about the respective lines of hinged connection with the back strip from a closed position in which the top and bottom are parallel with each other, but each are perpendicular to the back strip to an open flat position in which the top, back strip and bottom are in substantially the same plane.

Another type of toilet case in contrast to the "book type" is known as a reversed "box type" in which the normal box top becomes the base or bottom on which the heavier or larger toilet articles are supported and retained in position by tape or straps; such an arrangement permits the ready, sidewise withdrawal of the toilet pieces from under the retaining straps or loops. It is an inherent property or feature of any reversed "box type" case that the ends of the side wall of usual construction are permanently attached or secured to the back strip in such a manner as to make it impossible for any pivotal movement of the top about the upper edge of the back strip; this is true even though during the process of manufacture and before the ends of the side wall are attached directly to the back strip, it may have been possible by reason of a flexible hinge joint between the top and upper edge of the back strip to pivotally swing the top about the back strip to a position in the same plane as the back strip.

In a toilet case of the "book type", even though the various toilet articles may be held or retained in position on the top or bottom in pockets or by straps, it is desirable to provide a side wall between the top and bottom and extending around the free edges thereof, to serve as a closure therefor. Such a side wall is well adapted to receive a closing and locking means of the zipper type, which may be disposed in the side wall in various relations to the top and bottom, so as to be either equally spaced, or nearer to one or the other. In such a manner, the box-like portion of the case may be arranged so as to lie adjacent to either the top or bottom when the case is open.

In one preferred practical embodiment shown in Figs. 7 and 8, the side walls 5, 6, 7 extend around and are secured to the free edges 8, 9, 10 of the top 3 so as to form with the back strip 2 an upstanding box-like portion when the top 3 is supported in upright position as shown. Preferably the side wall strip is formed of a flexible material such as leather, imitation leather, or the like, to which one part 11 of a zipper type fastener 11, 12, may be readily secured as by stitches. The use of flexible or yielding material in the side wall is of advantage in facilitating the permanent attachment of one end, such as 13, of the side wall 7 and zipper 11 to the back strip 2 in such a manner as by stitching at the proper angle, as to permit the top 3 together with the side walls 5, 6, 7 to be swung back about the line of hinged or pivotal connection 14 with the back strip 2 so that the top 3 may lie flat in substantially the same plane as the back strip 2 and base or bottom 1, as shown in dotted lines in Fig. 7; see also Fig. 7 showing the top in full line flat position. This represents the normal open position of a "book type" of case.

When the top 3 is moved to an upstanding position as shown in full line position of the top 3, as shown in Figs. 7, 8, and Fig. 1, the yielding material of the side wall 7 and zipper 11 is flexed somewhat.

One way of permanently anchoring or securing one end of the side wall 7 and one end, such as the closed end, of the zipper parts 11, 12 to the back strip 2 is to provide an anchoring stay or strip 15 which may be stitched over the end of the side wall 7 and end of zipper parts 11, 12; of course, such ends may be secured to the back in other suitable manner well known in the art. While one end of the side wall is permanently secured to the back strip, it is done in such a way as to serve no function in holding the top 3 in upstanding position, but on the contrary, in the preferred form the line of stitching is at such an angle such as 45° or more, with the end of the back strip, so as to enable the top to be swung back into an open flat position so that the top may lie in the same plane as the bottom and back strip. Under such conditions, the end of the side wall secured to the back strip is turned or flattened somewhat when the case is opened flat, and the line of the zipper teeth on the side wall is flexed somewhat when the case is open with the top in upstanding position. On the other hand, the opposite side wall 5 having the end free and without any stitched connection with the back strip when the case is opened to flat position, presents a neat, trim, upstanding, straight line appearance for both the flat and the upstanding open positions of the top 3.

In order to change or transform the case when open from a flattened "book type" case to one having the upstanding or upright top characteristic of a "box type" case, a simple but yet effective fastening means is provided; this means is independent of and forms no essential integral part of the "book type" case structure when in either closed or in open flat position with the top, back strip and bottom in the same plane. The independent fastening means is functionally effective in an active sense when detachably connected between a portion of the back strip and a portion of the top or of the side wall, in such a manner as to support or hold the top in upright position.

In Figs. 7 and 8, a preferred transforming or change-over means is shown as comprising a tab 17 having one end 18 connected as by stitches 19 and a finishing patch 20, to the end of the back strip 2, adjacent the free and unsecured end of the side wall 5. The top also includes an upstanding portion 21 which is provided with means for effecting a detachable connection with the side wall 5, when the top 3 is in desired upstanding position, and the free side wall 5 is positioned above and spaced from the back strip 2. In this position, the upstanding portion 21 of the tab extends parallel and adjacent to the free end of the side wall 5 and preferably lies wholly within the case when open or closed.

Preferably, the simple and effective means for quickly detachably connecting one end of the tab 17 to the side wall is the snap button type of fastener, but other means well known in the art may be used. As shown, one member, preferably the ball portion 22, is secured to the tab 17 and the complementary socket portion 23 is secured in the side wall 5. The relative arrangement of the snap fastener parts 22, 23 and the forces transmitted through the vertical tab 17 lying in parallel adjacent relation to the vertical side wall 5, are such as to minimize the likelihood of any accidental separation of the snap fastener parts, because the normal forces transmitted through the side wall 5 and tab 17 are transverse to the relative direction of movement for separation of the fastener parts 22, 23. Under such conditions, the forces are not effective at the side of either of the snap members, or in such a direction as might tend to disengage the snap members.

If desired, additional snap members may be provided in the free side wall 5 to cooperate with the snap member in the tab 17 and may be suitably disposed for adjustably supporting the top at various angles in upstanding position. A general utility case thus arranged may be readily adapted for use as zipper type book cover or carrier, rather than for toilet articles; the angular adjustable feature may enable the case to serve as a back for supporting a book in an angular upright position for reading.

A modified type of support for selectively holding the top 3 in upright or upstanding position in changing the character of the case from a book type case to box type, is shown in Figs. 1 to 6 inclusive.

As shown in Figs. 1, 2, 5, and 6, an independent holding member 24 wholly independent of the free end of the side members 5 and of the side member 7, is disposed intermediate of said sides, and is so arranged as to enable the top 3 to be selectively either held in an upright position as shown in Fig. 1 or to lie flat in the same plane as the back strip 2 and the bottom 1.

The holding or bracing member 24 is shown as extending between a portion of the top 3 between the ends thereof, at one end of the member 24, to the back strip 2 at a point between the ends thereof and preferably at a point adjacent the hinge line 25 between the bottom 1 and back strip 2. There may be occasions, however, where it may be desirable to have the bracing member 24 extend between the bottom 1 and the top.

The bracing member 24 may be provided with a suitable detachable means at either or both ends, or intermediate the ends thereof, so that the top 3 may be swung back so as to lie flat in the same plane as the bottom 1 and back strip 2 when the case is open and may thus be changed from a case having the upstanding top characteristic of the box type case, see Fig. 1, to a

book type in which the top 3, back strip 2, and bottom 1 lie flat and in the same plane (see Fig. 2).

The detachable means for the independent upright bracing member may be of the two part snap button type, but other suitable means for effecting the detachable connection, well known in the art, may be used, such for example, as various types of buckles, friction slides, or equivalent devices.

It is, of course, understood that the detachable, adjusting feature may be dispensed with if it is not desired to employ the convertible feature to the book type in which the top 3 may lie flat in the same plane as the back strip 2 and bottom 1. Under such conditions, the independent bracing member would have its ends permanently secured at points intermediate the ends of the top and back strip and would preferably be composed of a yieldable material which bends and yields when the case is closed.

As shown in Figs. 1 and 2 the independent bracing member 24 has one end 26 permanently secured to the top 3 at a point spaced from the line of hinged connection 14 between the top 3 and back strip 2 and as shown is disposed centrally between the sides 5 and 7. The other end 27 of the bracing strip 24 is shown detachably connected to the back strip 2 preferably at a point near the line of hinged connection 25 between the bottom 1 and the back strip 2. The detachable connection is shown as a two part snap button type, one part 27 being secured to the back strip or a portion of the covering thereof, and the other part 28 is fixed in the end of the bracing member 24 at a suitable position to brace or support the top 3 in substantially upright or upstanding position or at the desired angle of inclination with the plane in which the bottom 1 and back strip 2 lie.

As shown in the illustrative embodiment in Figs. 1 and 2 the member 24 functions not only as a bracing member, but also serves as a holding or positioning means for an article, such as a comb 29, which is held in position in spaced relation from either the bottom, back strip or top members; this spaced arrangement enables the article to be more readily grasped with the fingers and thus facilitates removal from or insertion in its position in the case. As shown, a slip pocket for the article is formed by the strip 30, the opposite ends of which are secured as by stitches to the bracing member 24.

As shown in Figs. 1 and 2, the end 31 of the side member 5 is not free and independent of the back strip 2 as it is shown in Figs. 7 and 8, but is secured and attached to the back strip 2 in such a manner as not to function to hold or maintain the top in upright position when the case is open, but is secured or connected to the back strip in such a manner that the top 3 may be freely pivotally swung about the line 14 of hinged connection between the top 3 and the upper edge of the back strip so that the case may be opened as a book type with the top 3 in the same plane as the bottom 1 and back strip 2, as shown in Fig. 2. The end 31 is connected directly to the back strip 2, or a portion thereof or covering therefor, as by a strip or patch 32 which may be stitched, pasted or otherwise secured over the end 31 of the side 5 so as to lie flat upon the back strip 2 and thus present a neat appearance. When the top assumes the flat position shown in Fig. 2 the end of the side is tightened somewhat and is deflected from the upright position assumed by the main portion of the sides 5, 6, and 7.

When the top 3 is in upright or upstanding position as shown in Fig. 1, the end of side 5 adjacent its point of attachment to the back strip 2, is flexed or bent somewhat and the side 5 adjacent the line 14 of hinged connection stands in upright position substantially normal to the top 3 so as to present a box-like effect and to facilitate closure by the zipper runner 33 when it locks the zipper fasteners 11, 12 and is moved to a position near the end 31 of side wall 5. Of course, it is understood that if desired the end 31 of the side wall 5, as shown in Figs. 1 and 2, may be free and independent of the back strip 2, as shown in Figs. 7 and 8, and still obtain the advantages of this invention.

In Figs. 1 and 2 the end 34 of the side wall 7 is also shown anchored or secured to the back strip 2 or a portion of the covering or a tab attached thereto, but the arrangement is such as to permit the top 3 to be freely swung about the hinge line of connection 14 between the top 3 and back strip 2 so as to permit the top 3 to lie flat as in a book type case, in the same plane as the back strip 2 and bottom 1 when the case is open, as shown in Fig. 2. In this position the end portion of the side wall 7 is stressed and is under a slight tension, but when the top is held in upright or upstanding position by the bracing member 24 (see Fig. 1) a portion of the side wall 7 adjacent the end is flexed slightly and is not under tension such as would exist if the end 34 of the side wall 7 were secured or attached to the back strip in such a manner as to hold or maintain the top 3 in upstanding position as is the usual and customary form of box type of case whether the side walls are formed of a flexible or yielding material or of a relatively rigid or stiff material.

An anchoring and finishing strip or patch 35 may be employed to secure the end 34 of the side wall 7 and also the adjacent ends of the zipper fasteners 11, 12. This presents a neat and finished appearance and serves as a reaction or anchoring point against which reactive stresses are exerted when the runner 33 is to slide around to lock the case in closed position. As shown, the portion of the zipper fastener secured to and extending around the edge of the bottom forms a relatively low or narrow wall which is convenient in facilitating the ready removal of articles which may slide outward over said shallow wall, from under the securing straps or tapes 36 on the bottom 1.

It is, of course, obvious that if desired, the case may be reversed, that is, turned upside down, so that the part heretofore referred to as the bottom would be comparable to the cover or top of the usual box type case. In this position, the larger articles previously held in straps 36, could be loosely packed or carried in the box-like portion, and the case may be used as a general utility box-type case, when the tab or flap 21 is connected to the end of the side wall 5, as shown in Fig. 7, or when the bracing member 24 is arranged as shown in Fig. 1.

It is understood that this invention is not limited to any particular use or arrangement of tools or other articles in either part of the case.

Certain modified forms and arrangement of the bracing member 24 are shown in Figs. 3, 4, 5, and 6.

In Fig. 3, the bracing member 24 is shown as

a detachable member having the detachable snap connector 28 at each end.

Fig. 4 is a fragment showing a portion of the bottom 1 and back strip 2 in the same plane, and shows the top 3 standing upright. The location of the cooperating portions 27 of the snap fastener is shown in the back strip 2 and the top 3.

Fig. 5 is a composite fragment similar to Fig. 4, but showing the bracing member 24 in position to hold the top 3 in upright position.

Fig. 6 is a modified form in which the snap members 28 for holding the bracing member 24 are so arranged and disposed as to minimize the chances of accidental detachment under slight pressure. One portion of the detachable snap is carried in a yielding tab which is suitably secured as by stitches or other means to the top 1 and back strip 2 respectively. Under such an arrangement, the flat portion of each portion of the snap fastener lies in the same plane as the plane of tension in the bracing member 24.

It is understood that various changes and modifications well known in the art and trade may be made without departing from the spirit of my invention if within the scope of the following claims.

What I therefore claim and desire to secure by Letters Patent is:

1. In a book type case comprising a back strip, a bottom, and a top hingedly (or pivotally) connected to opposite sides of said back strip so that when the case is open the top, back strip and bottom may lie flat in substantially the same plane, side walls between the top and bottom when the case is closed extending about the free edges, and a zipper fastener for said side wall to permit the case to be opened or closed, one end of said side wall and zipper fastener being free and having no connection with the back strip, a fastening means independent of any integral structure essential for the book type case structure detachably connected between the back strip and a portion of the top including the free end of side wall whereby said flat book type case may be converted into a stand-up case of the box type in which the box is reversed so that the top serves as a base in the same plane as the back strip when the case is open and the box portion is in upright position.

2. In a case of the book type including a back strip, a bottom and a top, each having a pivotal connection with opposite sides of said back strip whereby when the case is open the top, back strip, and bottom may lie flat in substantially the same plane, a side wall extending around the free edge of the top, and a fastening device for the closing of the case, a means including a relatively short tab like member, independent of the side wall and having a detachable connection between the back strip and a portion of the top including the side walls thereof for permitting in normal use selective changing from the flat book type case to one having the stand-up characteristic of a box-type case in which the top is maintained in an upright position while the back strip and bottom are in substantially the same plane.

3. In a case of the book type adapted to lie flat including a back strip, a top and a bottom hinged at opposite sides of the back strip, a side wall extending around the free edge of the top and secured thereto to substantially close the space between the top and bottom, one end of the side wall being free and having no connection with the back strip, and the other end of the side wall being connected to the back strip by a line of stitches at such an angle as to permit the top to be pivotally swung about the line of hinged connection with the back strip so as to lie flat, and an independent fastener disposed in a plane adjacent to and parallel with the free end of the side having one end secured to the back strip in a plane adjacent to and parallel with said back strip and a means at the other end for detachable connection with the free end of the side wall whereby when the case is open the top may be maintained selectively in either a horizontal position in the plane of the back strip and bottom, or in a substantially upright vertical position when said independent fastener is attached to the free end of the side wall.

4. In a case of the book type adapted to lie flat including a back strip, a top and a bottom hinged at opposite sides of the back strip, a side wall extending around the free edge of the top and secured thereto to substantially close the space between the top and bottom, one end of the side wall being free and having no connection with the back strip, top hold-up means permanently connected to the back strip at one end and detachably connected to a portion of the top including the free end of the side wall at the other end for supporting the top in upstanding position.

5. A case set forth in claim 4 in which top hold-up means are connected to the back strip at a point spaced from ends thereof and spaced from the line of hinge connection with the top.

6. A case as defined in claim 4, said hold-up means including a detachable snap connection between the back strip and the top, whereby when open, the top may be selectively maintained in an upright position or said top may be in a flat position in the plane of said back strip and bottom.

7. A case as defined in claim 4, the top hold-up means including a yielding member permanently connected to the back strip at one end independent of the end of the side wall by a line of stitches which may be formed while the top and back strip are in the same plane, and means including a snap fastener at the other end of said member for detachably connecting the member to the free end of the side wall at a point spaced from the end thereof when the top is in upstanding position.

8. A case such as that defined in claim 2 wherein one end of the side wall is free and has no connection with the back strip and said last-named means includes a hold-up tab connected to the back strip at the end adjacent the free end of the side wall and extending upward so as to lie adjacent thereto when the top is in upstanding position, and detachable connecting means between the hold-up tab and the free end of the side wall.

9. A case as defined in claim 8 in which the detachable connecting means are of the snap button type whereby the force effective to maintain the top of the case in upstanding position as transmitted to the snap button through the hold-up tab and the side wall is transverse to the direction of relative movement required between the snap button parts to effect disengagement thereof, so that the likelihood of accidental disengagement of the snap button under slight force is minimized.

JACOB GLASKER.