PCT WORLD INTELLECTUAL PROPERTY ORGANIZATION
International Bureau

INTERNATIONAL APPLICATION PUBLISHED UNDER THE PATENT COOPERATION TREATY (PCT)

(51) International Patent Classification 6 : B32B 3/10, B31F 1/22

A1

(11) International Publication Number: **WO 99/26779**

(43) International Publication Date: 3 June 1999 (03.06.99)

(21) International Application Number: PCT/US98/24856

(22) International Filing Date: 23 November 1998 (23.11.98)

(30) Priority Data:
08/975,620 21 November 1997 (21.11.97) US

(63) Related by Continuation (CON) or Continuation-in-Part (CIP) to Earlier Application
US 08/975,620 (CON)
Filed on 21 November 1997 (21.11.97)

(71) Applicant *(for all designated States except US)*: MEANS INDUSTRIES, INC. [US/US]; 1860 S. Jefferson, Saginaw, MI 48601–2893 (US).

(72) Inventor; and
(75) Inventor/Applicant *(for US only)*: FIELD, Robert, H. [US/US]; 1304 Smith, Bay City, MI 48706 (US).

(74) Agents: DELEVIE, Hugo, A. et al.; Brooks & Kushman, 22nd floor, 1000 Town Center, Southfield, MI 48075 (US).

(81) Designated States: CA, JP, MX, US, European patent (AT, BE, CH, CY, DE, DK, ES, FI, FR, GB, GR, IE, IT, LU, MC, NL, PT, SE).

Published
With international search report.
With amended claims.

(54) Title: LAMINATED PARTS AND METHOD OF MAKING SAME

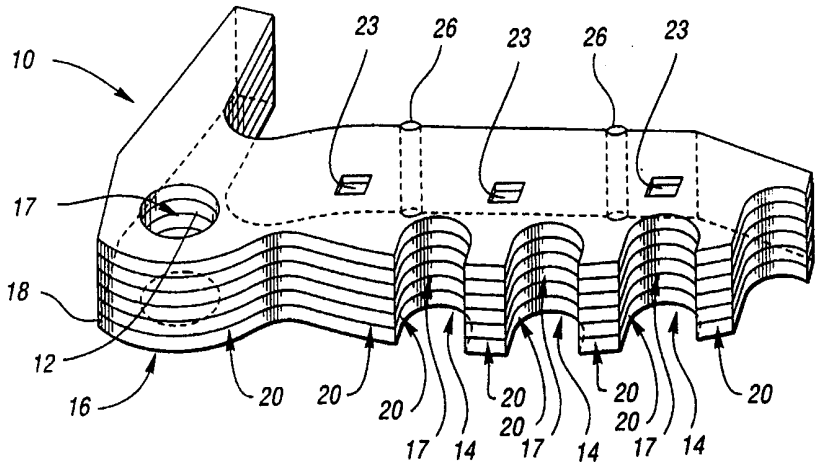

(57) Abstract

A method of manufacturing a load–transmitting component part (10) having at least two lateral engaging surfaces (17) includes stamping a plurality of thin laminas (18) from generally planar stock material. The laminas (18) are stacked together such that the laterally–disposed surfaces (20) of adjacent laminas (18) cooperate to define the lateral engaging surfaces (17) of the part (10). The laminas (18) are permanently secured together to prevent relative laminar movement when a load is transmitted from one of the part's lateral engaging surfaces (20) to another of the part's lateral engaging surfaces (20).

FOR THE PURPOSES OF INFORMATION ONLY

Codes used to identify States party to the PCT on the front pages of pamphlets publishing international applications under the PCT.

AL	Albania	**ES**	Spain	**LS**	Lesotho	**SI**	Slovenia
AM	Armenia	**FI**	Finland	**LT**	Lithuania	**SK**	Slovakia
AT	Austria	**FR**	France	**LU**	Luxembourg	**SN**	Senegal
AU	Australia	**GA**	Gabon	**LV**	Latvia	**SZ**	Swaziland
AZ	Azerbaijan	**GB**	United Kingdom	**MC**	Monaco	**TD**	Chad
BA	Bosnia and Herzegovina	**GE**	Georgia	**MD**	Republic of Moldova	**TG**	Togo
BB	Barbados	**GH**	Ghana	**MG**	Madagascar	**TJ**	Tajikistan
BE	Belgium	**GN**	Guinea	**MK**	The former Yugoslav Republic of Macedonia	**TM**	Turkmenistan
BF	Burkina Faso	**GR**	Greece			**TR**	Turkey
BG	Bulgaria	**HU**	Hungary	**ML**	Mali	**TT**	Trinidad and Tobago
BJ	Benin	**IE**	Ireland	**MN**	Mongolia	**UA**	Ukraine
BR	Brazil	**IL**	Israel	**MR**	Mauritania	**UG**	Uganda
BY	Belarus	**IS**	Iceland	**MW**	Malawi	**US**	United States of America
CA	Canada	**IT**	Italy	**MX**	Mexico	**UZ**	Uzbekistan
CF	Central African Republic	**JP**	Japan	**NE**	Niger	**VN**	Viet Nam
CG	Congo	**KE**	Kenya	**NL**	Netherlands	**YU**	Yugoslavia
CH	Switzerland	**KG**	Kyrgyzstan	**NO**	Norway	**ZW**	Zimbabwe
CI	Côte d'Ivoire	**KP**	Democratic People's Republic of Korea	**NZ**	New Zealand		
CM	Cameroon			**PL**	Poland		
CN	China	**KR**	Republic of Korea	**PT**	Portugal		
CU	Cuba	**KZ**	Kazakstan	**RO**	Romania		
CZ	Czech Republic	**LC**	Saint Lucia	**RU**	Russian Federation		
DE	Germany	**LI**	Liechtenstein	**SD**	Sudan		
DK	Denmark	**LK**	Sri Lanka	**SE**	Sweden		
EE	Estonia	**LR**	Liberia	**SG**	Singapore		

LAMINATED PARTS AND METHOD OF MAKING SAME

Technical Field

The invention relates to load-transmitting component parts and their manufacture, and more particularly to load-transmitting laminated component parts and their manufacture.

Background Art

A conventional method for manufacturing a load-transmitting component part includes stamping a roughly-dimensioned, monolithic blank from continuous strip stock material; heat-treating the blank to obtain a desired hardness; broaching or otherwise machining the blank to obtain a desired configuration of the finished part including the part's load bearing or "engaging" surfaces; and then heat treating the part again to reduce the residual stresses resulting from the broaching or machining step. This known method for making monolithic parts, with its multiple steps, is time consuming and costly.

Furthermore, because the stamping and broaching steps are typically performed on a relatively thick piece of material, close tolerances on the configuration of the finished part are costly to obtain. For example, during the stamping step, a punch tool having a configuration of the desired blank is used to punch a blank from continuous strip stock material. The stock material is supported on a die having a hole which likewise has a configuration of the desired blank, but slightly larger than the dimensions of the punch. As the punch begins to force the stock material through the die, the leading edge of the blank being formed is typically depressed slightly, thereby forming a radius on the leading edge. As the punch forces the stock material further through the die, a portion of the desired blank is sheared from the remaining stock material, thereby forming a substantially smooth shear section. Finally, as the punch forces the stock material completely through the die, the last interconnecting portion between the stock material and the trailing edge of the blank being formed breaks, thus resulting in a die break section which is rough compared to the shear section.

Typically, as the thickness of the stock material increases, both the radius formed on the blank's leading edge and the size of the die break section likewise increase. Each of these surface defects must thereafter be removed as by broaching or machining, thereby greatly increasing the relative cost of such parts. In response, the prior art teaches the use of an intermediate heat-treating step, thereby permitting use of a relatively soft stock material from which to stamp the rough part.

Other known methods of manufacturing load-transmitting component parts involve forging or casting a rough part, and then machining the rough part to obtain the desired configuration of the finished part. While it is possible to achieve close tolerances on the configuration of the finished part, these methods involve significant tooling and equipment costs.

Summary Of The Invention

In accordance with the invention, a component part having at least two lateral load-bearing or "engaging" surfaces comprises a plurality of laminas, each of the laminas having a plurality of laterally-disposed surfaces. The laminas are stacked such that laterally-disposed surfaces of at least two of the laminas cooperate to define each of the part's lateral engaging surfaces. The laminas are secured together to prevent relative movement of any one of the laminas with respect to another of the laminas when a load is transmitted through the part from one of the lateral engaging surfaces to another of the lateral engaging surfaces.

In a preferred embodiment, a plurality of projections and complementary recesses are formed in several of the lamina such that, when stacked, the projections and recesses of adjacent lamina are placed in an interference fit. In this manner, the laminas may be secured together for relatively low transmitted load applications without the use of other securing mechanisms, such as welds or fasteners.

Under the invention, a method for manufacturing a load-transmitting component part having at least two lateral engaging surfaces includes stacking a plurality of laminas together such that laterally-disposed surfaces defined on at least two of the laminas cooperate to define each lateral engaging surface of the part. The method further includes securing the laminas together to prevent relative movement of any one of the laminas with respect to another of the laminas when a load is

transmitted through the part from one of the part's lateral engaging surfaces to another of its lateral engaging surfaces.

The foregoing and other objects, features and advantages of the present invention will be more readily apparent to those skilled in the art after review of the best mode for carrying out the invention, taken in conjunction with the accompanying drawings.

Brief Description Of The Drawings

Referring to the Drawings, wherein like reference numerals are used to identify elements common to each of the embodiments illustrated therein:

FIGURE 1 is a perspective view of a first exemplary laminated part manufactured in accordance with the invention;

FIGURE 2 is a top view of the first exemplary laminated part shown in FIGURE 1;

FIGURE 3 is a side view of the first exemplary laminated part shown in FIGURE 1;

FIGURE 4 is a perspective view of a second exemplary laminated part manufactured in accordance wit the invention;

FIGURE 5 is a perspective view of a third exemplary laminated part manufactured in accordance with the invention.

FIGURE 6 is a flow chart of an exemplary method according to the invention;

FIGURE 7 is a cross sectional view of a fixture holding a stack of laminas; and

FIGURE 8 is a side view of a stack of laminas held together by clamps.

Best Mode For Carrying Out The Invention

The invention advantageously provides a method by which load-transmitting component parts, i.e., parts having at least two lateral load-bearing or engaging surfaces, can be manufactured efficiently and cost-effectively to close dimensional tolerances. The invention further advantageously provides a method by which such load-transmitting component parts can be manufactured without requiring any intervening heat treating or annealing steps. Thus, while the invention is further described below in connection with certain exemplary component parts, specifically, a first steering wheel lock shoe 10, a second steering wheel lock shoe 110, and a parking pawl 30 for a vehicle's automatic transmission, it will be appreciated that the method of the invention may be used to manufacture any suitable load-transmitting component part, including, but not limited to, such other component parts as cams/cam lobes, exhaust flanges and exhaust spacers.

Figures 1-3 show a first exemplary laminated component part constructed in accordance with the invention, specifically, a first steering wheel lock shoe 10. The first lock shoe 10 has one aperture 12 and three notches 14, and a lower end surface 16. The aperture 12 and the three notches 14 each define a lateral engaging surface 17 one the lock shoe 10, i.e., a surface against which an external load will bear when a load is transmitted through the lock shoe 10. By way of example only, the lock shoe 10 may be used in a vehicle to lock a tilt steering wheel in three different operating positions corresponding to the three notches 14. It will be appreciated that the number of lateral engaging surfaces 17 may vary, depending on the design requirements of the first lock shoe 10.

As seen in Figures 2 and 3, the first lock shoe 10 includes a plurality of stacked laminas 18. Each of the laminas 18 has a plurality of laterally-disposed surfaces 20 and a plurality of downward interlocking projections 22 and opposed complimentary recesses 23, with the exception that the lamina 18 forming the lower end surface 16 of the part 10 is provided with a plurality of openings 24 in lieu of any interlocking projections 22. For the purpose of clarity, the laterally-disposed surfaces 20 are labeled on only one of the laminas 18 in Figures 1 and 3.

In the first lock shoe 10 illustrated in Figures 1-3, each lamina 18 has roughly the same general size and shape, as defined by the laterally-disposed surfaces 20 thereof. It will be appreciated that, under the invention, the size and

shape of one or more of the laminas 18 may vary from the size and shape of another lamina 18, depending upon the design requirements of the particular part.

In the first lock shoe 10, the laterally-disposed surfaces 20 of each adjacent lamina 18 cooperate to define the four lateral engaging surfaces 17 of the first lock shoe 10. It will be appreciated, however, that the invention contemplates laminated component parts whose lateral engaging surfaces 17 are cooperatively defined by the laterally-disposed surfaces 20 of at least two, but possibly fewer than all, of the stacked laminas 18. Thus, the laterally-disposed laminar surfaces 20 that cooperate to define one of the part's lateral engaging surfaces 17 may be disposed on the same or different laminas 18 as compared with the laterally-disposed laminar surfaces 20 that define another of the part's lateral engaging surfaces 17.

Returning to Figure 3, the recesses 23 of each lamina 18 and the openings 24 of the lamina 18 forming the lower end surface 16 of the part 10 are sized and shaped to be engageable with the corresponding projections 22 of an immediately adjacent lamina 18. Thus, the projections 22 cooperate with the recesses 23 and openings 24 to lock the laminas 18 together, thereby preventing relative movement of any one of the laminas 18 with respect to another of the laminas 18, for example, when a load is transmitted from one of the first lock shoe's lateral engaging surfaces 17 (as defined by the notches 14) to another of the first lock shoe's lateral engaging surfaces 17 (as defined by the aperture 12).

While the invention contemplates providing projections 22, recesses 23 and openings 24 of any suitable shape, the projections 22, recesses 23 and openings 24 of each lamina 18 are preferably generally rectangular in plan view. The laminas 18 of the first lock shoe 10 are also preferably laser welded together, whereby at least two weld beads 26 are formed, to further prevent relative laminar movement.

Figure 4 shows a second exemplary laminated steering wheel lock shoe 110 according to the invention. The second lock shoe 110 is similar to the first lock shoe 10 described in connection with Figures 1-3, except that the laminas 18 of the second lock shoe 110 are not welded together, and the laminas 18 of the second lock shoe 110 are formed without any the projections 22, recesses 23 or openings 24. The laminas 18 of the second lock shoe 110 are secured together by a conventional rivet 28 to prevent relative movement of any one of the laminas 18 with respect to

another of the laminas 18 when a load is transmitted from one lateral engaging surface 17 to another lateral engaging surface 17. It will be appreciated that the invention contemplates securing the laminas 18 of the second lock shoe 110 together in any suitable manner in order to prevent relative laminar movement when a load is transmitted from one lateral engaging surface 17 to another lateral engaging surface 17.

Figure 5 shows a third exemplary laminated component part in accordance with the invention, specifically, a parking pawl 30 for use in an automatic transmission of a vehicle to lock the transmission in a stationary position. The parking pawl 30 includes an aperture 12, a notch 14 and a lower end surface 16. The aperture 12 and the notch 14 each define a lateral engaging surface 17 on the parking pawl 30.

As illustrated in Figure 5, the parking pawl 30 is itself formed of a plurality of stacked laminas 18. Each lamina 18 includes a plurality of laterally-disposed surfaces 20 and a plurality of downward projections 22 (not shown in Figure 5) and opposed complimentary recesses 23, with the exception that the lamina 18 forming the lower end surface 16 of the parking pawl 30 includes a plurality of openings 24 (not shown in Figure 5) in lieu of any interlock projections. For the purpose of clarity, the laterally-disposed surfaces 20 are labeled on only one of the laminas 18 in Figure 5.

As in the case of the first steering wheel lock shoe 10 described above and illustrated in Figures 1-3, the recesses 23 of each lamina 18 and the openings 24 of the lamina 18 forming the lower end surface 16 of the parking pawl 30 are engageable with the corresponding projections 22 of the immediately adjacent lamina 18. The interlocking engagement of the recesses 16/openings 24 with the corresponding projections 22 prevents relative laminar movement when transmitting a load between a pair of lateral engaging surfaces 17, without requiring any other mechanism or structure for securing together each of its lamina 18.

Figure 6 is a flow chart illustrating an exemplary method according to the invention for manufacturing a load-transmitting part, such as the first steering wheel lock shoe 10 illustrated in Figures 1-3.

In the first step, a plurality of thin laminas 18 are provided. While the method contemplates any suitable manner of providing the laminas 18, in a preferred

method, the laminas 18 are stamped from thin strip stock material. By way of example only, the laminas 18 are preferably stamped using a conventional punch and die from a strip of pre-hardened generally planar steel strip stock 46 having a hardness value preferably in the range of 65 to 100 R_b.

In the preferred method, the stamping step simultaneously forms a plurality of laterally-disposed surfaces 20 and a plurality of downward projections 22, recesses 23 and openings 24 on the laminas 18. For the purpose of clarity, the laterally-disposed surfaces 20 are labeled on only one of the laminas 18 in Figures 1 and 3. Alternatively, the laminas 18 may be formed by cutting or otherwise forming the laminas 18 from suitable stock material.

After each lamina 18 is stamped from the strip stock 46, the lamina 18 is preferably transferred as by a punch 48 into a suitable fixture, such as a stacking device 50 as shown schematically in Figure 7. The stacking device 50 includes a choke element 52 which is sized and shaped to receive and hold a stack 54 of laminas 18. As each lamina 18 is pushed into the stacking device 50, the projections 22 of the pushed lamina 18 engage the corresponding recesses 23 of the lamina 18 at the top of the stack 54, thereby locking the laminas 18 together to prevent relative laminar movement. As each lamina 18 is forcefully inserted onto stack 54, the other laminas 18 are pushed downwardly a distance roughly equal to the thickness of the lamina 18.

The laminas 18 are continually stacked in the stacking device 50 until the height of the stack 54 is roughly equal to the desired thickness of the part, e.g., the first steering wheel lock shoe 10 shown in Figures 1-3. By way of example, where the stock material is nominally about 0.94 mm (about 0.037 inches) thick, a steering wheel lock shoe 10 having a nominal thickness of about 9.4 mm (about 0.370 inches) will typically include ten laminas 18. It will be appreciated that the number of laminas required for a particular component part may vary, depending on the desired thickness and load-transmitting capability of the part.

Alternatively, the laminas 18 may be stamped or otherwise formed such that no projections 22, recesses 23 or openings 24 are formed in the laminas 18 as shown in Figure 4. For example, it may be desirable to eliminate the interlock tabs 22 from the laminas 18 if the stock material 46 is too brittle, due to a required hardness value of the stock material 46 for a particular part, to allow formation of

the tabs. The laminas 18 may then be stacked and manually or otherwise held together, such as with clamps 56 as shown in Figure 8, to substantially eliminate any gaps between the laminas 18.

During the stacking step, the laminas 18 are positioned such that the laterally-disposed surfaces 20 of at least two laminas 18 cooperate to define each of at least two lateral engaging surfaces 17 of the finished steering wheel lock shoe 10. As noted above, the number of lateral engaging surfaces 17 may vary depending on the design requirements of a particular component part. Preferably, the laterally-disposed surfaces 20 of adjacent laminas 18 cooperate to define continuous lateral engaging surfaces 17 on the steering wheel lock shoe, as seen in Figure 1.

Next, the laminas 18 are secured together to prevent relative movement of any one of the laminas 18 with respect to another of the laminas 18 when a load is transmitted through the part 10 from one of the lateral engaging surfaces 17 to another of the lateral engaging surfaces 17. As noted above, the laminas 18 may be secured together by weld beads 26 as shown in Figures 1-3, by a conventional fastener such as a rivet 28 as shown in Figure 4, or in any other suitable manner. Weld beads may be formed by conventional arc welding, laser welding, or any other welding process as understood by those skilled in the art.

Alternatively, interlocking the laminas 18 together by engaging the projections 22, recesses 23 and openings 24 of adjacent laminas 18 may be sufficient in relatively low load-transmitting applications to prevent relative laminar movement without any additional securing step. The invention contemplates the combined use of two or more such mechanisms or structures by which to prevent relative laminar movement when transmitting a load from one of the part's lateral engaging surfaces 17 to another.

In the preferred method of practicing the invention, the strip stock is provided with the desired hardness of the finished part, and no intervening heat treatment steps are required. It will be appreciated that the laminas may alternatively be heat treated following the stamping step to obtain a desired hardness.

What Is Claimed Is:

1. A part having at least two lateral engaging surfaces, the part comprising a plurality of stacked laminas, each of the laminas having a plurality of laterally-disposed surfaces, wherein the laterally-disposed surfaces of at least two of the laminas cooperate to define each of the lateral engaging surfaces, and wherein the laminas are secured together to prevent relative movement of any one of the laminas with respect to another of the laminas when a load is transmitted through the part from one of the lateral engaging surfaces to another of the lateral engaging surfaces.

2. The part of claim 1, wherein the part has at least three lateral engaging surfaces, and wherein the load is selectively transmitted between at least two of the lateral engaging surfaces.

3. The part of claim 1, wherein a first lamina has a projection and a second lamina has a recess, and wherein the projection of the first lamina interferingly engages the recess of the second lamina.

4. The part of claim 1, wherein one lamina is welded to another lamina.

5. The part of claim 1, further including a fastener for securing one lamina to another lamina.

6. The part of claim 1, wherein the laterally-disposed surfaces of one lamina define a different shape than the laterally-disposed surfaces of another lamina.

7. The part of claim 1, wherein adjacent laterally-disposed surfaces of the laminas cooperate to define at least one continuous lateral engaging surface of the part.

8. The part of claim 1, wherein at least two laminas include an aperture formed therein, the apertures defining additional laterally-disposed surfaces of the

at least two laminas, the additional laterally-disposed surfaces cooperating to define at least one of the lateral engaging surfaces.

9. A method of manufacturing a part from a plurality of laminas, wherein each of the laminas has a plurality of laterally-disposed surfaces, and the part has at least two lateral engaging surfaces, the method comprising:

stacking the laminas together such that the laterally-disposed surfaces of at least two of the laminas cooperate to define the at least two lateral engaging surfaces of the part; and

securing the laminas together to prevent relative movement of any one of the laminas with respect to another of the laminas when a load is transmitted through the part from one of the lateral engaging surfaces to another of the lateral engaging surfaces.

10. The method of claim 9, wherein a first lamina has a projection and a second lamina has a recess, and wherein stacking includes inserting the projection of the first lamina into the recess of the second lamina.

11. The method of claim 9, wherein the laterally-disposed surfaces of one lamina define a different shape than the laterally-disposed surfaces of another lamina.

12. The method of claim 9, wherein adjacent laterally-disposed surfaces of the laminas cooperate to define at least one continuous lateral engaging surface of the part.

13. The method of claim 9, wherein stacking includes inserting the laminas into a fixture.

14. The method of claim 9, wherein securing includes welding one lamina to another lamina.

15. The method of claim 9, wherein securing includes fastening one lamina to another lamina.

16. The method of claim 9, wherein the part has at least three lateral engaging surfaces by which to selectively transmit a load between one lateral engaging surface and another of the lateral engaging surfaces.

17. A method of manufacturing a part having at least three lateral engaging surfaces, the method comprising:

stamping a plurality of laminas from generally planar stock material, whereby a plurality of laterally- disposed surfaces are formed on each of the laminas, a projection is formed on a first lamina and a recess is formed on a second lamina;

stacking the laminas together such that the laterally-disposed surfaces of the laminas cooperate to define the lateral engaging surfaces of the part, and the projection of the first lamina engages the recess of the second lamina to prevent relative movement of any one of the laminas with respect to another of the laminas when a load is transmitted through the part from one of the lateral engaging surfaces to another of the lateral engaging surfaces.; and

securing the laminas together to further prevent relative laminar movement.

AMENDED CLAIMS

[received by the International Bureau on 15 April 1999 (15.04.99) ;
new claims 18 – 29 added ; remaining claims unchanged (3 pages)]

15. The method of claim 9, wherein securing includes fastening one lamina to another lamina.

16. The method of claim 9, wherein the part has at least three lateral engaging surfaces by which to selectively transmit a load between one lateral engaging surface and another of the lateral engaging surfaces.

17. A method of manufacturing a part having at least three lateral engaging surfaces, the method comprising:

stamping a plurality of laminas from generally planar stock material, whereby a plurality of laterally- disposed surfaces are formed on each of the laminas, a projection is formed on a first lamina and a recess is formed on a second lamina;

stacking the laminas together such that the laterally-disposed surfaces of the laminas cooperate to define the lateral engaging surfaces of the part, and the projection of the first lamina engages the recess of the second lamina to prevent relative movement of any one of the laminas with respect to another of the laminas when a load is transmitted through the part from one of the lateral engaging surfaces to another of the lateral engaging surfaces.; and

securing the laminas together to further prevent relative laminar movement.

18. The part of claim 1, wherein the laterally-disposed surfaces cooperating to define a first one of the lateral engaging surfaces are disposed on a first set of laminas, and the laterally-disposed surfaces cooperating to define a second one of the lateral engaging surfaces are disposed on a second set of laminas, the first set not being coextensive with the second set.

19. The part of claim 1, wherein one of the lateral engaging surfaces defines a notch.

20. A steering wheel lock shoe, for use with a motor vehicle, comprising a plurality of stacked laminas, wherein each lamina is rigid and generally planar; each lamina includes a plurality of laterally-disposed surfaces, the laterally-

disposed surfaces of at least two of the laminas cooperate to define each of a plurality of lateral engaging surfaces including at least one notch; and wherein the laminas are secured together to prevent relative movement of any one of the laminas with respect to another of the laminas when a load is transmitted through the shoe from one of the lateral engaging surfaces to another of the lateral engaging surfaces.

21. The steering wheel lock shoe of claim 20, wherein at least two of the lateral engaging surfaces are disposed along one side of the shoe.

22. The steering wheel lock shoe of claim 20, wherein the shoe has at least three lateral engaging surfaces, and wherein the load is selectively transmitted between at least two of the lateral engaging surfaces.

23. The steering wheel lock shoe of claim 20, wherein a first lamina has a projection and a second lamina has a recess, and wherein the projection of the first lamina interferingly engages the recess of the second lamina.

24. The steering wheel lock shoe of claim 20, wherein one lamina is welded to another lamina.

25. The steering wheel lock shoe of claim 20, further including a fastener for securing one lamina to another lamina.

26. The steering wheel lock shoe of claim 20, wherein the laterally-disposed surfaces of one lamina define a different shape than the laterally-disposed surfaces of another lamina.

27. The steering wheel lock shoe of claim 20, wherein adjacent laterally-disposed surfaces of the laminas cooperate to define at least one continuous lateral engaging surface of the shoe.

28. The steering wheel lock shoe of claim 20, wherein at least two laminas include an aperture formed therein, the apertures defining additional laterally-disposed surfaces of the at least two laminas, the additional laterally-disposed surfaces cooperating to define at least one of the lateral engaging surfaces.

29. The steering wheel lock shoe of claim 20, wherein the laterally-disposed surfaces cooperating to define a first one of the lateral engaging surfaces are disposed on a first set of laminas, and the laterally-disposed surfaces cooperating to define a second one of the lateral engaging surfaces are disposed on a second set of laminas, the first set not being coextensive with the second set.

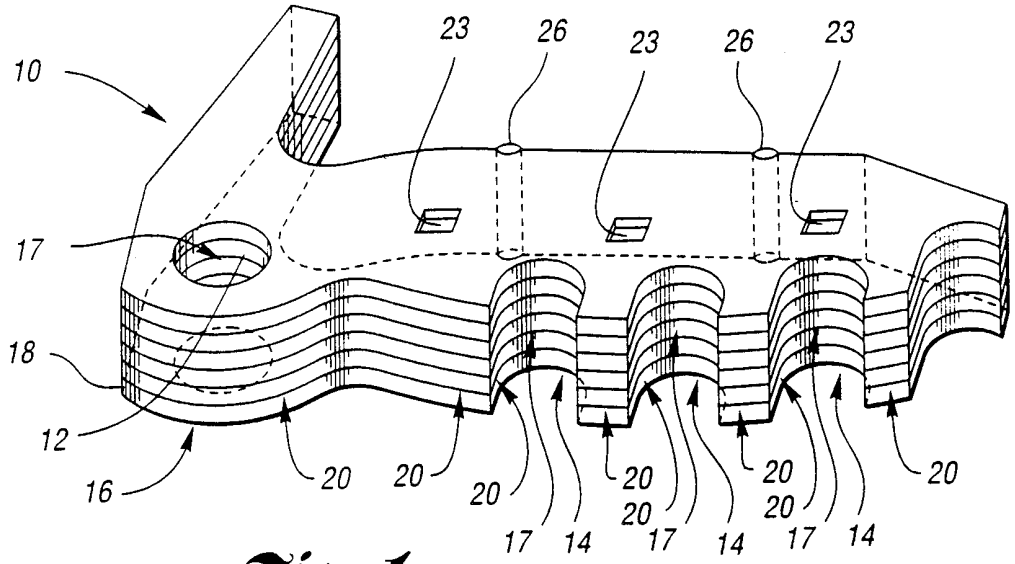

Fig. 1

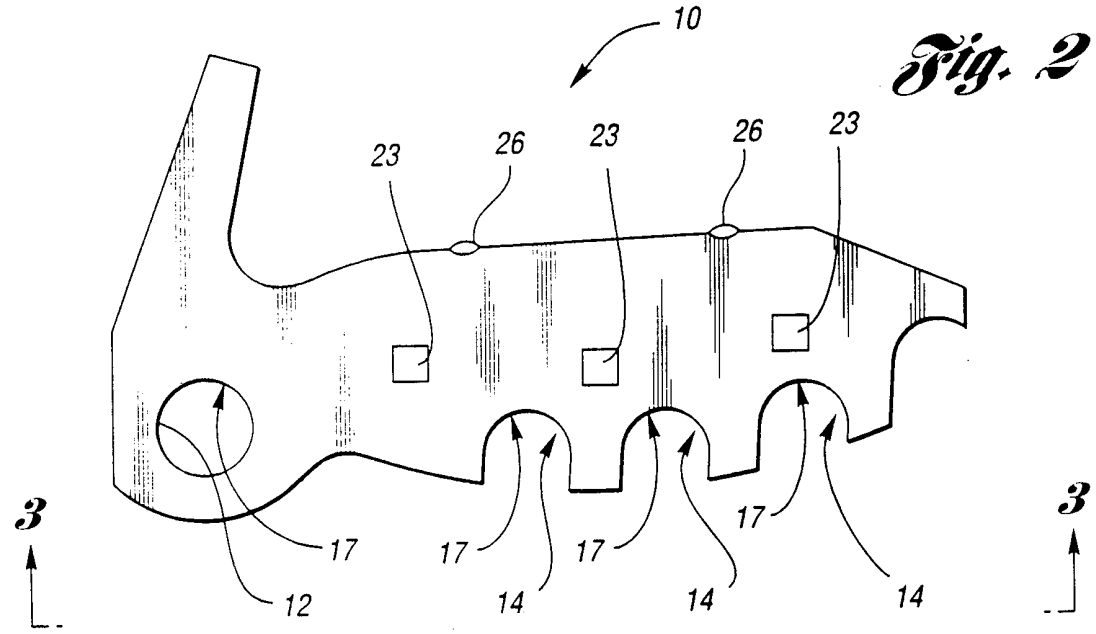

Fig. 2

Fig. 3

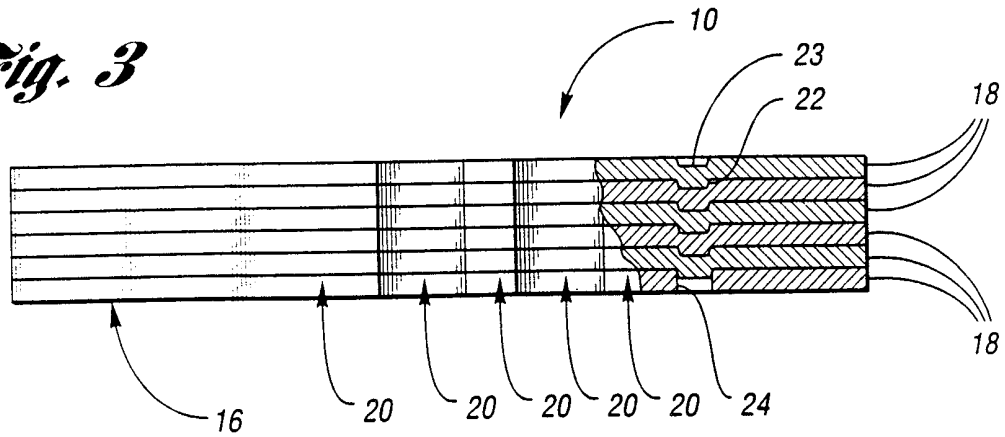

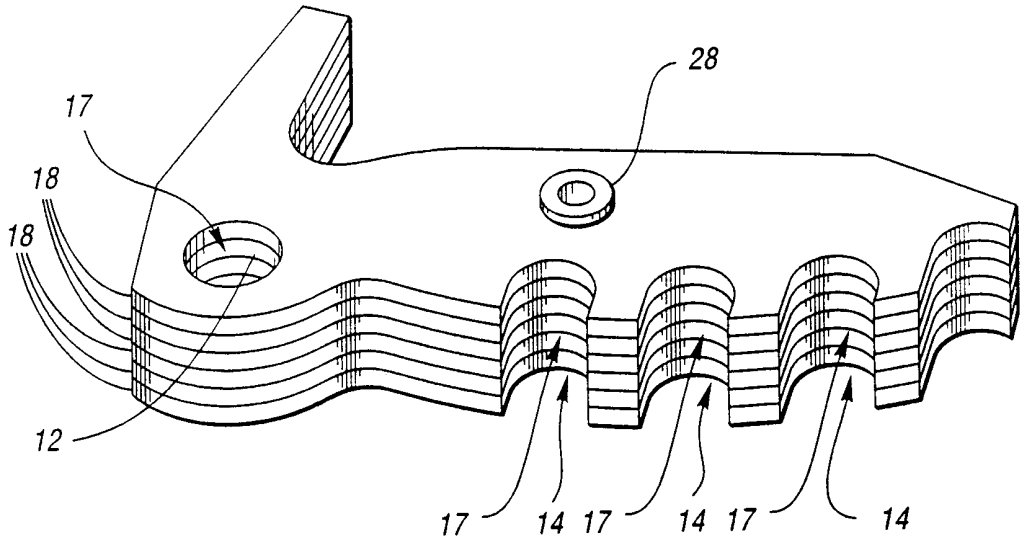
28
17
18
18
12
17
14
17
14
17
14

Fig. 4

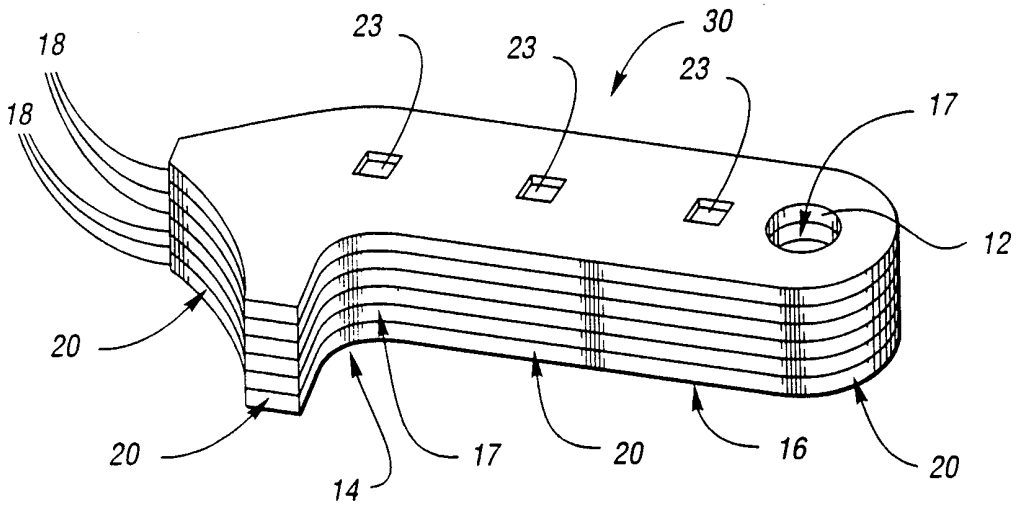
23
23
30
23
18
18
17
12
20
20
14
17
20
16
20

Fig. 5

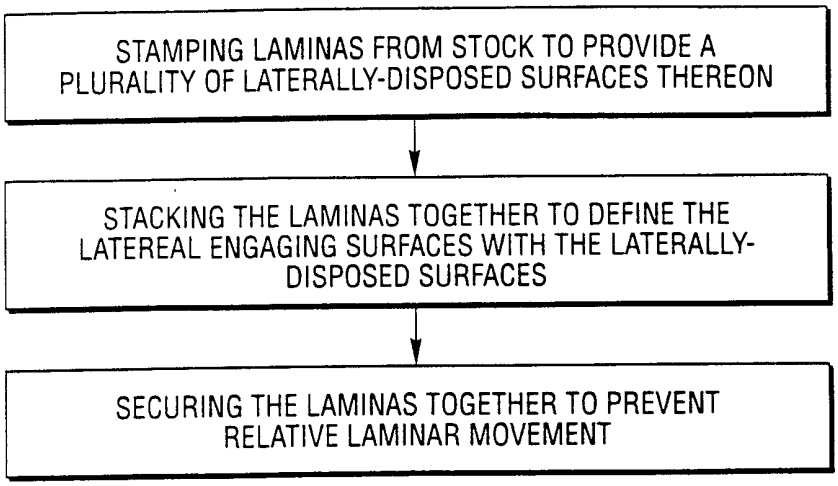

Fig. 6

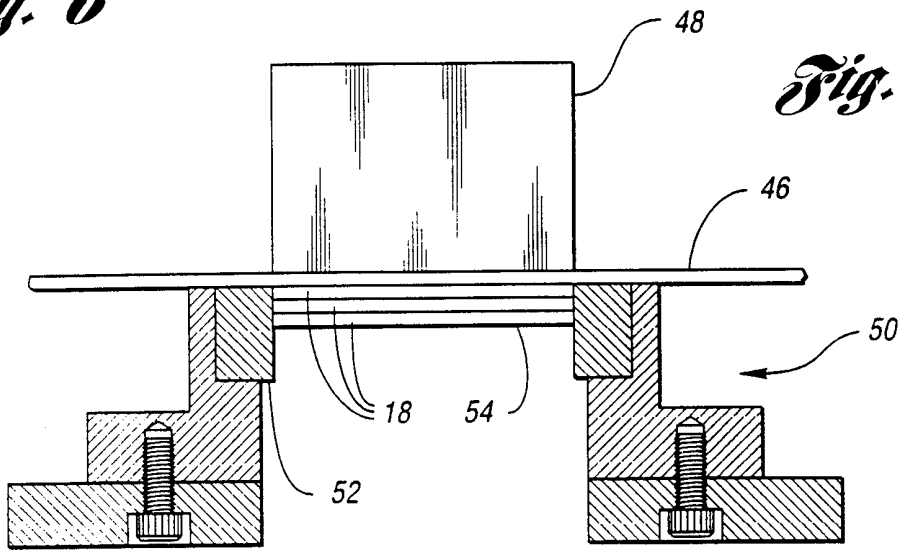

Fig. 7

Fig. 8

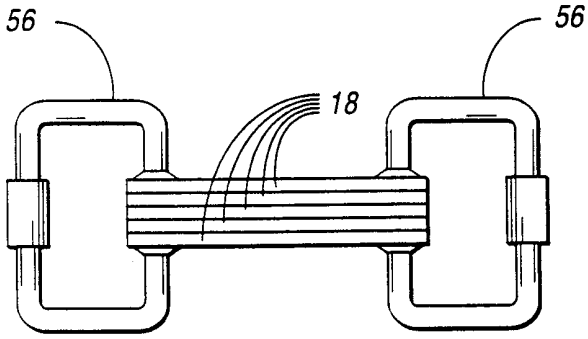

INTERNATIONAL SEARCH REPORT

International application No.
PCT/US98/24856

A. CLASSIFICATION OF SUBJECT MATTER

IPC(6) :B32B 3/10; B31F 1/22
US CL :Please See Extra Sheet.
According to International Patent Classification (IPC) or to both national classification and IPC

B. FIELDS SEARCHED

Minimum documentation searched (classification system followed by classification symbols)

U.S. : 156/176, 196, 209, 220, 222, 239, 297; 428/57, 63, 133, 137, 172, 174, 182

Documentation searched other than minimum documentation to the extent that such documents are included in the fields searched

Electronic data base consulted during the international search (name of data base and, where practicable, search terms used)

C. DOCUMENTS CONSIDERED TO BE RELEVANT

Category*	Citation of document, with indication, where appropriate, of the relevant passages	Relevant to claim No.
X -- Y	US 3,086,899 A (SMITH ET AL) 23 April 1963, see figure 4.	1-8 ---- 9-17
X -- Y	US 4,771,826 A (GREHIER ET AL) 20 September 1988 (20-09-88), see figures 5, 6B, 7, 8 and 11.	1-8 ----- 9-17
X	US 5,447,772 A (FLIEGER) 05 September 1995 (05-09-95), see figure 1b and 1c.	1-17

☐ Further documents are listed in the continuation of Box C. ☐ See patent family annex.

*	Special categories of cited documents:	"T"	later document published after the international filing date or priority date and not in conflict with the application but cited to understand the principle or theory underlying the invention
"A"	document defining the general state of the art which is not considered to be of particular relevance	"X"	document of particular relevance; the claimed invention cannot be considered novel or cannot be considered to involve an inventive step when the document is taken alone
"E"	earlier document published on or after the international filing date	"Y"	document of particular relevance; the claimed invention cannot be considered to involve an inventive step when the document is combined with one or more other such documents, such combination being obvious to a person skilled in the art
"L"	document which may throw doubts on priority claim(s) or which is cited to establish the publication date of another citation or other special reason (as specified)	"&"	document member of the same patent family
"O"	document referring to an oral disclosure, use, exhibition or other means		
"P"	document published prior to the international filing date but later than the priority date claimed		

Date of the actual completion of the international search 04 FEBRUARY 1999	Date of mailing of the international search report 16 FEB 1999
Name and mailing address of the ISA/US Commissioner of Patents and Trademarks Box PCT Washington, D.C. 20231 Facsimile No. (703) 305-3230	Authorized officer DONALD J. LONEY Telephone No. (703) 308-0651

Form PCT/ISA/210 (second sheet)(July 1992)★

INTERNATIONAL SEARCH REPORT

International application No.
PCT/US98/24856

A. CLASSIFICATION OF SUBJECT MATTER:
US CL :

156/176, 196, 209, 220, 222, 239, 297; 428/57, 63, 133, 137, 172, 174, 182