Sept. 12, 1961 R. E. STANAWAY 2,999,914

MAGNETIC SWITCH

Filed Dec. 23, 1957

Fig. 2.

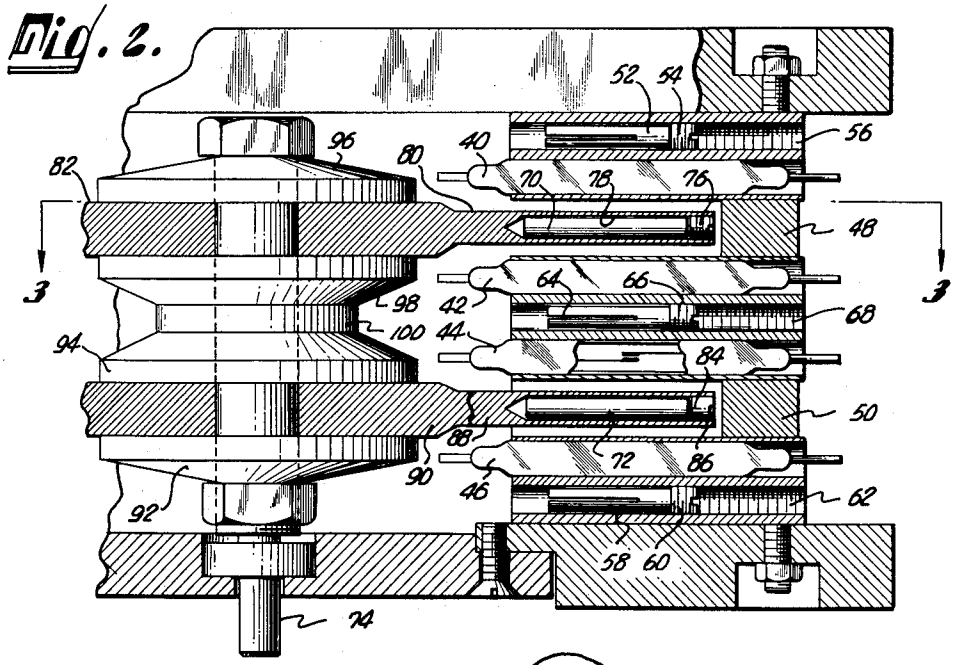

Fig. 3.

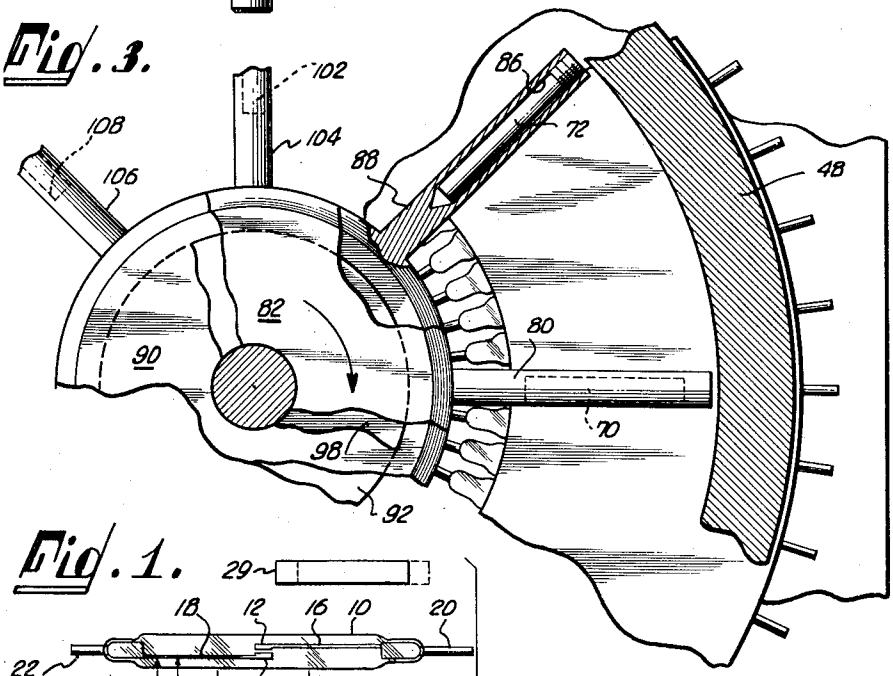

Fig. 1.

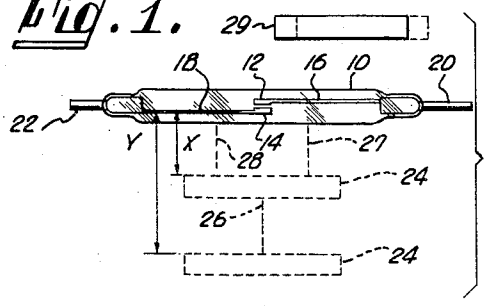

INVENTOR.
ROBERT EDWARD STANAWAY

BY

Christie, Parker & Hale

ATTORNEYS.

United States Patent Office 2,999,914
Patented Sept. 12, 1961

2,999,914

MAGNETIC SWITCH

Robert Edward Stanaway, Pasadena, Calif., assignor, by mesne assignments, to Consolidated Electrodynamics Corporation, Pasadena, Calif., a corporation of California

Filed Dec. 23, 1957, Ser. No. 704,557
5 Claims. (Cl. 200—87)

This invention relates to mechanical switches and more particularly to such switches which may be magnetically controlled.

In the field of switch devices it is desirable to obtain a switch which can be opened and closed at a high rate, yet with a minimum of contact noise so that low level signals on the order of several microamps can be switched. Where a large number of electrical devices are to be interrogated at high speeds, it is customary in many instances to employ a commutating switch of the type having a plurality of stationary contacts and a moving arm. The various devices interrogated have an output signal level connected to the various stationary contacts of the commutating switch. The movable arm is rotated, and once each revolution it engages the stationary contacts, thereby interrogating the various devices once each revolution. The wiping action of the moving contact as its crosses the stationary contacts presents several disadvantages, among which are substantially large electrical noise signals from the wiping action and a relatively short useful life from the frictional engagement of the wiping contact with the stationary contacts. As a consequence, electrical output signals having an amplitude lower than that of the electrical contact noise cannot be detected, and because of the frictional wear and tear of the stationary contacts and the wiping contact, the useful life of such a commutating switch is limited, and the necessity for periodic repair or replacement renders such a switching device expensive to use as well as often unreliable after only a few hours of use.

In order to overcome the foregoing disadvantage a switch is provided according to the present invention which is magnetically operated and controlled, and a plurality of them may be employed as a commutating switch which has no wiping contacts. High speed sampling of low level signals is permissible, and such switch is simple and easy to manufacture. Furthermore, it has a long useful life, is relatively small, and is inexpensive to manufacture and maintain.

According to the present invention, any leaf-type switch may be employed provided the leaves are magnetizable. Numerous magnetic relays, commercially available, may be suitable. A small magnet such as a bar magnet is fixed in position within a critical zone. The critical zone can be ascertained my moving the magnet toward the switch until the contacts close and withdrawing the magnet until the contacts open. The position where the magnet causes the relay contacts to close can be defined as one boundary of the critical zone. The position where the contacts open can be defined as another boundary of the critical zone. If the magnet is fixed in position in the critical zone between the two boundaries thus ascertained, but not on these boundaries, a magnetic field is supplied to the switch which serves to maintain the switch contacts in whatever position they occupy. For example, if the contacts are closed, they are maintained closed; whereas, if the contacts are open, they are maintained in the open position.

Another magnet is brought into the vicinity of the fixed magnet with its poles arranged to aid the magnetic field of the fixed magnet and of such magnetic field strength that the resulting magnetic field applied to the leaf-type

switch is sufficiently strong to polarize the leaf members and close them by magnetic attraction. If the contacts are open beforehand, they are closed by this operation. If, on the other hand, they are closed beforehand, this operation is uneventful. At any rate, the leaf members and associated contacts are closed after this operation. Since the fixed magnet located in the critical zone is capable of maintaining the contacts in whatever position they occupy, it is seen that the contacts remain closed when the movable magnet is moved from the vicinity of the fixed magnet.

When it is desired to open the relay contacts, a magnet having poles that oppose the fixed magnet is brought into the vicinity of the fixed magnet. This movable magnet may be the same one used in the closing operation. If so, it must be rotated to reverse the position of the poles. On the other hand, the movable magnet may be an additional magnet which has its poles reversed with respect to the closing magnet. In any event, the magnetic field of the opening magnet opposes the magnetic field of the magnet fixed in located in the critical zone. Consequently, the resulting magnetic field applied to the arms of the contacts is rendered so small that the magnetic force attracting the leaf members is less than the spring force tending to separate them, and the leaf members separate. Since the fixed magnet within the critical zone serves to maintain the contacts in whatever position they occupy, it is seen that the contacts remain open when the movable magnet is withdrawn from the vicinity of the fixed magnet.

By this novel arrangement a switch is provided which may employ a fixed magnet located in a critical zone and two movable magnets oppositely poled. By providing for movement of the movable magnets to and away from the vicinity of a fixed magnet, the switch may be closed, then opened. Alternatively, by reversing the poles of each magnet, the switch may be opened, then closed. In each instance, however, the switch is bi-stable in its operation because the fixed magnet in the critical zone serves to maintain the leaf-type contact arms in whatever position they occupy whenever a movable magnet is brought inot the vicinity thereof and removed.

A commutating switch device without wiping contacts may be provided according to this invention by arranging a plurality of such switches in a given pattern, arranging fixed magnets in a critical zone with respect to the switches, and providing for a pair of movable arms on which are mounted magnets of oppositely disposed poles. By controlling the speed of the movable arms, the switches can be operated at a desired rate without the use of wiping contacts. Electrical noise signals from wiping contacts is eliminated and a commutating device having an extremely long and useful life is provided.

Whenever moving magnets are employed in or near closed electrical circuits, the problem of induced signals arises, and in order to secure accurate measurements of electrical signals from devices under interrogation, it is necessary to eliminate the effects of the induced signals. The problem associated with induced signals is overcome in the present invention by displacing the movable arms on which the magnets of oppositely disposed poles are mounted. If the displacement of the movable magnets is sufficiently great, a region therebetween can be secured which is substantially free of any magnetic field. The size of such a region may be varied by changing the strength of the magnets employed as well as their displacement from one another. The time during which such a field free region is present at a given switch is determined by the speed of the movable magnets. Such factors as pole strength, displacement of the magnets and speed of the magnets can be varied to provide a given

period during which no signals are induced in each of the plurality of magnetic switches and the associated electrical circuits under interrogation. It is during this period that the electrical devices under interrogation are sampled and an accurate measurement made of their electrical output signals, substantially free and clear of any induced signal from the movable magnets which serve to open and close the various circuits in a given order. Accurate electrical measurements can be made with a commutating device of this type operated at high speed.

These and other features of this invention may be more fully appreciated when considered in the light of the following specification and drawings in which:

FIG. 1 illustrates the invention in its most elemental form.

FIGS. 2 and 3 illustrate the invention employed in a commutating switch device.

Referring first to FIG. 1, the present invention is described first with reference to a single switch. Within a glass envelope **10** a pair of switch contacts **12** and **14** are disposed on respective flexible arms **16** and **18** which in turn are connected to respective terminals **20** and **22**. The flexible arms resist movement, and when closed, they exert a spring force which tends to separate them. Where this force is less than that desired, small bias springs may be used on one or both of the arms **16** and **18** to separate the contacts **12** and **14**.

If a magnet **24** of given field strength is disposed as shown at a distance X from the switch arm **18**, the magnetic field applied to the switch arms **16** and **18** is sufficiently strong to polarize these arms and cause them to close against the spring tension which normally holds apart the contacts **12** and **14**. If the magnet **24** is moved away from the switch a distance Y as indicated in the dotted line position, the magnetic field applied to the switch arms **16** and **18** is diminished to the point where the polarized arms have a force of magnetic attraction which is less than the mechanical spring bias force tending to separate the contacts. Consequently the spring bias forces the contacts apart and the switch is opened. The region between the X and Y locations may be referred to as the critical zone, and if the magnet **24** is fixed in position within this zone, it serves to hold the contacts **12** and **14** in whatever position they occupy, either closed or open. It is pointed out that the magnet **24** cannot occupy either of the two positions shown. If the magnet is placed a distance X from the switch, the switch always remains closed, and if the magnet is placed at a distance Y from the switch, the switch is never held closed. Therefore, the magnet **24** must lie somewhere between the two positions shown. Assuming the contacts **12** and **14** are closed, the magnetic field from the magnet **24**, tending to hold these contacts closed, approaches a maximum as the position of the magnet **24** approaches the distance X from the switch, and this magnetic force approaches a minimum as the magnet **24** approaches the distance Y from the switch. This assumes of course that the magnet **24** always remains within that critical zone defined by the X or Y positions indicated and does not occupy either the X or Y position.

There are numerous other regions within which a critical zone is delineated. If the center of the magnet **24** is shifted to the right or left to respective dotted lines **27** and **28**, a closure of the blades **16** and **18** is effected if the magnet **24** is moved to the upper extremity of either line and a release of the blades is effected if the magnet is moved to the lower extremity of the same line. Other lines parallel to the lines **26**, **27** and **28** and located at intermediate positions likewise define critical zones. Still other critical zones may be determined by moving the magnet **24** to the right and left but parallel with the longitudinal axis of the blades **16** and **18**. To simplify the illustration, another magnet **29** is employed. Positioned as shown, the magnet **29** effects a closure of the blades **16** and **18**. If moved right to the dotted line position indicated, the magnet **29** permits a release of the blades. Thus a critical zone is defined intermediate these two positions. If the magnet **29** is moved within a corresponding area on the left end of the envelope **10**, another critical zone is defined. If the magnet **29** is moved from the position shown in FIG. 1 toward the envelope **10** and to the right still further critical zones can be determined. If the magnet **29** is moved left from the position indicated and away from the envelope **10**, still other critical zones are found. When a critical zone is defined by placing the center of the magnet opposite the center of the envelope **10**, the magnet is at the greatest lateral distance from the switch for critical zones involving movement of the magnet **24** longitudinally and parallel with the axis of the switch.

From the foregoing discussion it is seen that numerous regions constitute critical zones. A magnet placed within such zone serves to provide a field which magnetizes the switch arms and holds them closed once they are closed by any other means and permits the switch arms to remain open if they are opened by any other means. Stated in the alternative, the magnet in a critical zone supplies a magnetic field to the switch blades which is effective to maintain the blades in whatever position they occupy, either the opened or closed position.

If the magnet **24** is fixed in position somewhere within a determined critical zone and if the contacts **12** and **14** are pressed together by some means not shown, the magnetic field from the magnet **24** tends to concentrate in the blades **16** and **18**, and the magnetic field density in the blades **16** and **18** when they are closed is greater than when they are open. Thus it is seen that the function of the magnet **24** is that of a holding magnet which, although the total magnetic field thereof does not change, the effective field through the switch blades does change, being greater when the blades are closed and less when the blades are open. The two magnetic field intensities in the blades are such that once the blades are closed, the effective magnetic force therein tending to hold them closed is greater than the spring bias tending to open them, and the effective magnetic force tending to close these blades when they are open is less than the spring bias serving to hold them apart. It is this characteristic which provides the bi-stable action of holding the blades closed once they are closed or leaving them open once they are opened.

The manner of opening and closing the blades may be performed by any technique desired. One suitable manner in which this might be performed is to use another magnet having a field which aids that of the fixed magnet **24**. The aiding magnet in conjunction with the fixed magnet supplies a magnetic field to the blades which is sufficiently strong to polarize the blades and effect a closing operation by magnetic attraction against the spring bias, and when the aiding magnet is removed the magnetic field of the holding magnet is effective to maintain sufficient polarization to keep the contacts closed. When it is desired to open the contacts, a further magnet poled to oppose the magnetic field of the holding magnet **24** may be brought into the vicinity thereof. The opposing fields thus provide an effective field on the blades which is insufficient to hold these blades closed against the spring bias inherent in the blade arms **16** and **18**. Consequently, the blades separate and the switch is opened. Once the opposing magnet is removed, the effective field from the holding magnet is insufficient to reclose the contacts **12** and **14**, and hence the switch remains open. The aiding and opposing magnets may be the same magnet which is brought into the vicinity of the holding magnet **24**, first in an aiding relationship to close the contacts and second in an opposing relationship to open the contacts. Alternatively, two separate magnets may be employed.

The field strength of the aiding magnet in one arrangement may be sufficiently strong to close the switch arms

16 and 18 without the aid of the holding magnet. In another arrangement the field strength of the aiding magnet may be insufficient alone to polarize the switch arms and effect a closure by magnetic attraction, but in combination with the field strength of the holding magnet the two magnets provide a magnetic field intensity sufficient to polarize and close the switch arms by magnetic attraction against the spring bias. The field strength of the opposing magnet must be sufficient to effectively cancel the field of the holding magnet to the point where the effective magnetic field on the switch arms is insufficient to polarize these switch arms and hold them by magnetic attraction against the spring bias. The strength of the opposing magnet must of necessity be limited. If it is too strong, it serves to polarize the switch arms in the opposite direction and maintain the switch arms closed against the spring bias by the reverse polarization. Thus it is seen that the aiding magnet may include any magnetic field strength above a given minimum. The opposing magnet must have a field strength sufficiently large to effectively balance out the magnetic field of the holding magnet at the switch arms, yet the strength of the opposing magnetic field must not exceed that of the holding magnet by an amount which causes reverse polarization of the switch arms and maintains them closed against the spring bias.

Referring next to FIGS. 2 and 3, the switch in FIG. 1 is illustrated in a commutating arrangement which involves no wiping contacts. A plurality of switches are arranged in a circular pattern within a cylindrical drum. FIG. 2 shows a cross-sectional view through the right half of the drum and FIG. 3 illustrates in plan view a portion of the drum along the line 3—3 in FIG. 2. As more clearly shown in FIG. 2 a plurality of switches are designated generally at 40, 42, 44, 46. These switches are preferably of the type shown and described in FIG. 1, but numerous other leaf-type switches may be utilized. A spacer 48 separates the switches 40 and 42 while a spacer 50 separates the switches 44 and 46. A magnet 52 having a threaded end portion 54 is screwed into a threaded bore 56. This magnet serves as a holding magnet, and as explained with reference to the switch in FIG. 1, it is positioned within a critical zone by adjusting its position longitudinally with respect to the switch 42. A magnet 58 having a threaded end portion 60 is screwed into a threaded bore 62 and is moved to the right or left to insure proper positioning in a critical zone of the switch 46. The switches 42 and 44 share a single magnet 64 which has a threaded end portion 66 that engages a threaded bore 68. By adjusting the position of the magnet 64 longitudinally with respect to the switches 42 and 44, this magnet may be positioned in the critical zone of both switches.

Movable magnets 70 and 72 are disposed on a rotatable shaft 74. As shown more clearly in FIG. 2, the magnet 70 has a threaded end portion 76 which engages a threaded bore 78 located in an arm 80 of a mounting disk 82. In a similar fashion the movable magnet 72 has a threaded end portion 84 which screws into a threaded bore 86 located in the end of an arm 88 attached to a mounting disk 90. Binding collars 92 and 94 hold the mounting disk 90 in proper position for the magnet 72 to move between the two banks of switches positioned circumferentially around the lower inside portion of the drum, one bank including the switch 44 and the other bank including the switch 46. In a similar fashion, binding collars 96 and 98 engage the mounting disk 82, and this unit is properly positioned by a spacer 100 so that the rotating magnet 70 moves between two banks of switches located circumferentially around the upper inside portion of the drum, one bank including the switch 40 and the other bank including the switch 42.

As shown in FIG. 3 there are two arms on each mounting disk X which carry movable magnets. The mounting disk 82 carries the magnet 70 in the arm 80 and a magnet 102 in an arm 104. Both arms 80 and 104 are connected to the mounting disk 82. The mounting disk 90 has two arms 88 and 106 connected thereto with each arm carrying respective magnets 72 and 108 therein. If the shaft 74 is rotated in the clockwise direction as indicated by the arrow in FIG. 3, the moving magnets 70 and 102 cause the upper two circular banks of switches to be sequentially operated, whereas the movable magnets 72 and 108 cause the lower two banks of switches to be operated. Two types of operation are possible. For example, if the switches are normally open, they may be sequentially closed by one associated moving magnet and a short period later be opened by the other associated moving magnet. Alternatively if the switches are normally closed, they may be sequentially opened by one associated moving magnet and a short period later be closed by the other associated moving magnet. Conversion from either type of operation to the other type of operation is secured by reversing the poles of both movable magnets.

Assuming it is desired to sequentially close the various switches for a short period but leave them normally opened, the magnets 70 and 72 are poled to perform as closing magnets, and as such they are poled to aid the field of the associated fixed magnets 52, 58 and 64. Thus the magnets 102 and 108 serve as opening magnets, and as such they are poled to oppose the associated fixed magnets 52, 58 and 64. The fixed magnets 52, 58 and 64 serve as holding magnets which insure that the switch contacts remain in whatever position they are in until the associated movable magnets effect a change in the position of the switch arms. When the movable magnet 70, for example, approaches the switch 40 in FIG. 2, the contacts of this switch are closed because the magnetic field of the magnet 70 aids the magnetic field of the fixed magnet 52 at the blades of the switch 40. The field intensity of the magnet 70 may be sufficient alone to close the switch blades. On the other hand it may be insufficient alone to close the switch blades, but when combined with the field of the magnet 52, the net field may be sufficient to close the switch blades. In either case the magnetic field is sufficient to polarize the switch blades and close the switch contacts against the inherent spring bias of the switch blades. As the movable magnet 70 moves away from the switch 40, the magnetic field supplied by the fixed magnet 52 to the switch blades is sufficient to hold these blades together against an inherent spring bias. As the movable magnet 70 proceeds in a clockwise direction around the inside of the drum, switches located in the bank of switches that includes the switch 40 are likewise closed along the way. The movable magnet 102 follows the movable magnet 70 and is poled opposite to both magnets 52 and 70. When the magnet 102 reaches the switch 40, the resulting magnetic field through the switch blades is reduced to a point where the inherent spring bias of these blades exceeds the closing force of the net magnetic field. Consequently the switch blades open, thereby separating the blade contacts. When the magnet 102 leaves the switch 40, the field of the fixed magnet 52 on the switch blades is insufficient to force these blades together, and thus the switch 40 remains open until the movable magnet 70 returns in the next revolution to the switch 40. As the movable magnet 102 proceeds in a clockwise direction around the inside of the drum, associated switches located in the bank of switches that includes the switch 42 are likewise opened along the way.

The movable magnets 70 and 102 operate in conjunction with the fixed magnet 64 to open and close switches located in the bank of switches that includes the switch 42, and the movable magnets 72 and 108 operate in conjunction with the fixed magnets 58 and 64 to open and close the two banks of switches which include respective switches 44 and 46. Although four banks of switches are shown in the commutating device of FIGS. 2 and 3,

it is to be understood that the number of banks of switches may be increased or diminished as desired. In the simplest form of commutating device only a single bank of switches may be employed. Thus it is seen that the bank of switches which includes the switch **40** and the bank of switches which includes the switch **42** are sequentially operated to close for a short period and remain open for a relatively longer period. The period during which a switch remains closed may be increased or diminished by respectively increasing or decreasing the angle between the two arms **80** and **104**. The period during which a switch is closed is determined by the time which the magnet **102** lags behind the magnet **70**. The time which a switch is open is determined by the period of time which the magnet **70** follows behind the magnet **102**. It follows that the period of closure is relatively shorter than the period when the switch is open. In a similar fashion the movable magnets **72** and **108** control the lower banks of switches, switch **44** being located in one of the banks and the switch **46** being located in the other bank.

Signals are induced in electrical circuits associated with closed switches. If the switches **40** and **4 2**in FIG. 2, for example, are closed by the magnet **70**, signals are induced in the electrical circuits associated with these switches as the magnet **70** moves toward and away from these closed switches. Likewise as the magnet **102** subsequently approaches these switches, signals of opposite polarity are induced because the magnet **102** is oppositely poled with respect to the magnet **70**. The signals induced by the magnet **102** occur as this magnet approaches the switches **40** and **42** and continues until these switches are opened. If the angle between the arms **80** and **104** is made sufficiently great a region intermediate the two arms may be secured which is free of magnetic lines of flux from both the magnets **70** and **102**. The size of this region free of any magnetic field may be controlled by varying the strength of the magnets **70** and **102** as well as the angle between the arms **80** and **104**. As the strength of the magnets is decreased, the size of this region increases, and as the angle of displacement of the arms **80** and **104** is increased, this region is enlarged. Once the angle of displacement between the arms **80** and **104** is fixed and the strength of the magnets **70** and **102** is selected, the size of the region between the two arms free of any magnetic field is determined.

In order to illustrate how the commutating switch device is operated to permit sampling of electrical outputs without interference from induced signals, assume thaat the switches **40** and **42** are opened. When the magnet **70** approaches the switches **40** and **42** and reaches a given position, the switches are closed, as explained above. The magnetic field from the magnet **70** applied to the switches **40** and **42** induces a signal in these switches and their associated circuits as soon as the switches are closed. The amplitude of the induced signal is determined by the speed and the magnetic field intensity from the magnet **70**, the amplitude of the induced signal being greatest when this magnet is immediately under the switch **40** and over the switch **42**. As the magnet **70** moves away from these switches, the amplitude of the induced signal decreases and reaches a value of zero when the region of zero magnetic field approaches and surrounds the switches. As long as the switches **40** and **42** are engulfed in the region of zero magnetic field, no signal is induced therein, and the period of time during which this region engulfs the switches is determined by the speed of the moving arms **80** and **104**. This period may be increased or decreased by correspondingly decreasing or increasing the rotational speed of the arms **80** and **104**. It is during the period when the region of zero magnetic field surrounds the switches **40** and **42** that electrical devices associated therewith may be sampled and electrical measurements made which are free and clear of any induced signal by the moving magnets **70** and **102**. As the region of zero magnetic field leaves the switches **40** and **42**, the magnetic field of the magnet **102** approaches and is applied to the switches **40** and **42**. The intensity of the applied magnetic field increases as the magnet **102** approaches these closed switches, thereby inducing a signal which commences at a zero level and builds up to a maximum level when the magnet **102** approaches these switches sufficiently close to open them as explained above. Since measurements of the electrical output of the devices under investigation is already completed, the latter induced signal is without consequence. In a similar fashion each of the remaining switches associated with the magnets **70** and **102** are in turn closed first by the field of the magnet **70**, subsequently opened by the magnetic field of the magnet **102** and during the interim both switches undergo a period of zero magnetic field during which associated electrical devices may be sampled without interference from signals induced by the moving magnetic fields. The magnets **72** and **108** and their associated switches are operated in a like manner to sequentially open and close each switch once during each revolution of the arms **88** and **106**.

Thus a novel switch device is provided which is very reliable in operation, simple and easy to manufacture. The switch is well adapted for use in a commutating type switch device, and because wiping contacts are eliminated, its useful life is extended and operating costs are reduced. It is to be understood that various modifications and numerous other arrangements are readily suggested to one skilled in the art.

What is claimed is:

1. A commutator switch device including a plurality of magnetic switches each mechanically biased to one of two positions, means for applying a fixed magnetic field to said switches, first and second magnets displaced from one another and movably mounted to move past each of said magnetic switches, said first magnet serving to apply a magnetic field which operates each switch to a second position against the mechanical bias, said fixed magnetic field serving to hold each magnetic switch in the second position when the magnetic field of the first magnet is removed, said displacement between the first and second magnets being sufficiently great to provide a region therebetween which is substantially free of any magnetic field from either magnet, said second magnet having a magnetic field poled opposite to that of the first magnet and serving to reduce the net magnetic field of each switch when applied thereto whereby each magnetic switch is returned to the one position by its mechanical bias.

2. The apparatus of claim 1 wherein said first and second magnets are disposed on two arms which rotate about a common axis and said magnetic switches are arranged about the common axis to come under the influence of the first and second magnets once each revolution of the two arms.

3. A commutator switch device including a plurality of magnetic switches each mechanically biased to one of two positions, one magnet for each magnetic switch placed in a critical region for applying a holding magnetic field to said switches, first and second magnets displaced from one another and movably mounted to move past each of said magnetic switches, said first magnet serving to apply a magnetic field which aids the holding magnetic field to operate each switch to a second position against the mechanical bias, said holding magnetic field serving to hold each magnetic switch in the second position when the magnetic field of the first magnet is removed, said displacement between the first and second magnets being sufficiently great to provide a region therebetween which is substantially free of any magnetic field from either magnet, said second magnet having a magnetic field poled opposite to that of the first magnet and serving to oppose the holding magnetic field to reduce the net magnetic field of each switch when applied thereto whereby each

magnetic switch is returned to the one position by its mechanical bias.

4. A commutator switch device comprising a plurality of switches each including a pair of magnetizable switch arms spring biased to normally occupy an open position, first means for applying a fixed magnetic field to the switch arms of each of said switches, said fixed magnetic field located with respect to the switches such that the magnetic field applied to said switches is sufficient to hold closed any switches which are in the closed position but is insufficient to close any magnetic switches which are in the open position, second means to apply to said switches an aiding magnetic field having a polarization like that of the fixed magnetic field, third means to apply to said switches an opposing magnetic field having a polarization reversed from that of the fixed magnetic field, and fourth means for moving the second means and the third means successively past each of said switches.

5. Apparatus in accordance with claim 4 wherein the fourth means is a rotatable member and the second means and the third means are magnets, each of the magnets being mounted on the rotatable member and displaced from each other whereby the magnets sequentially operate the plurality of switches once during each revolution of the rotatable member.

References Cited in the file of this patent

UNITED STATES PATENTS

2,523,297	Hastings	Sept. 26, 1950
2,550,605	Schenck	Apr. 24, 1951
2,795,773	Perkins et al.	June 11 ,1957
2,803,720	Mason	Aug. 20, 1957
2,821,597	Germanton et al.	Jan. 28, 1958
2,872,597	Ormond	Feb. 3, 1959
2,877,315	Oliver	Mar. 10, 1959
2,902,558	Peek	Sept. 1, 1959
2,902,564	Fleck	Sept. 1, 1959
2,912,678	Robinson et al.	Nov. 10, 1959
2,922,994	Kennedy	Jan. 26, 1960