Feb. 14, 1939. R. S. STONER 2,147,506

FLOATING WEIGHT ELECTRIC SWITCH

Filed Nov. 3, 1936 3 Sheets-Sheet 1

Fig. 1

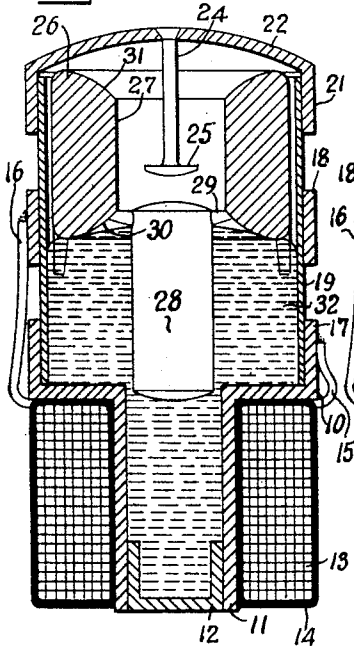

Fig. 2.

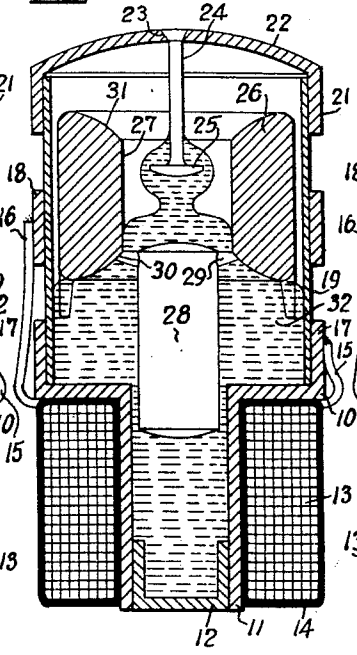

Fig. 3.

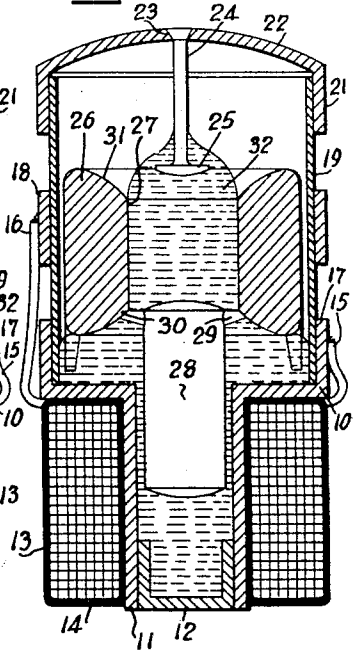

Fig. 4.

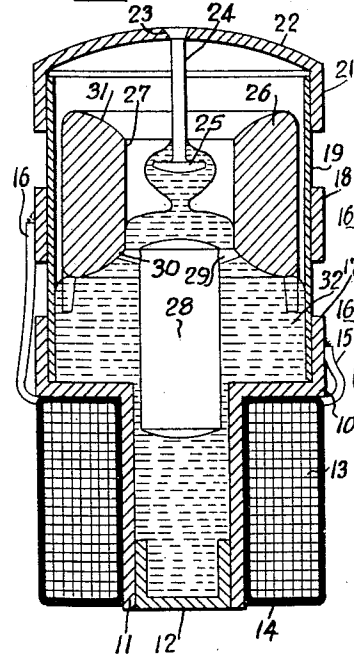

Fig. 5.

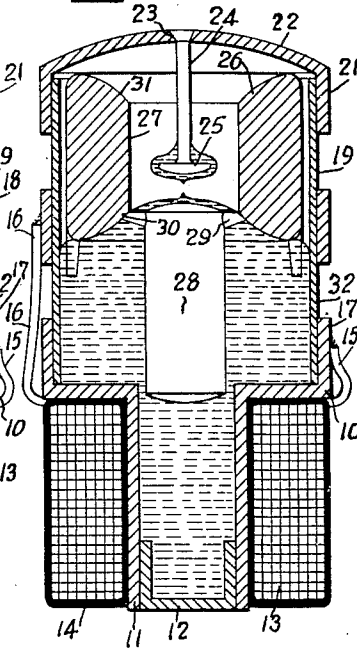

Fig. 6.

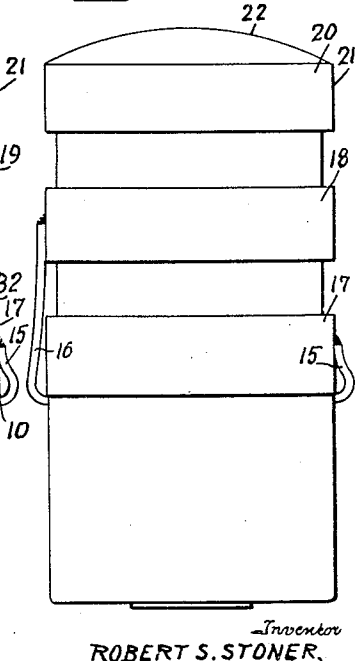

Inventor
ROBERT S. STONER,
BY
Goudmin & Goudmin
Attorneys

Feb. 14, 1939. R. S. STONER 2,147,506

FLOATING WEIGHT ELECTRIC SWITCH

Filed Nov. 3, 1936 3 Sheets-Sheet 2

Fig. 7.

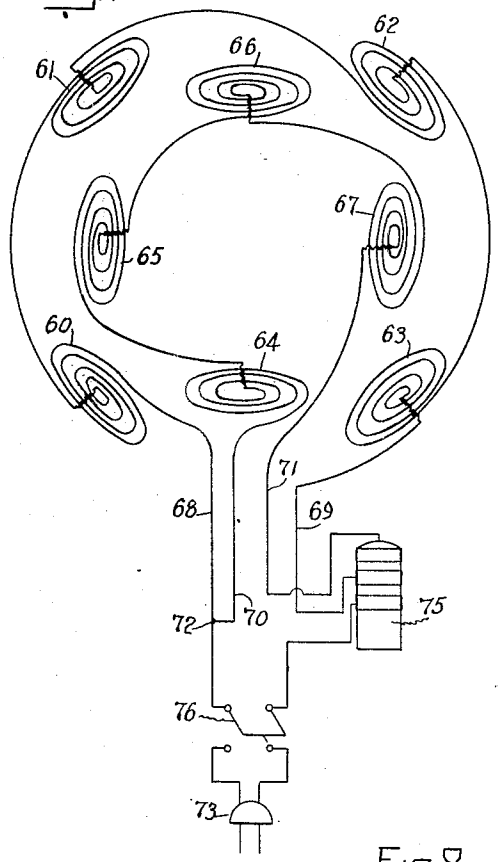

Fig. 9.

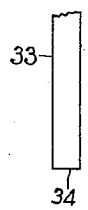

Fig. 10.

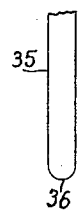

Fig. 11.

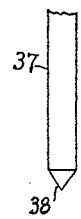

Fig. 12.

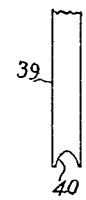

Fig. 13.

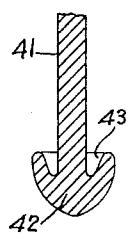

Fig. 14.

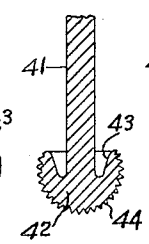

Fig. 15.

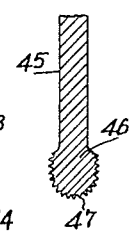

Fig. 16.

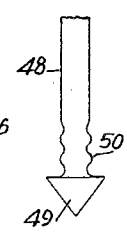

Fig. 8.

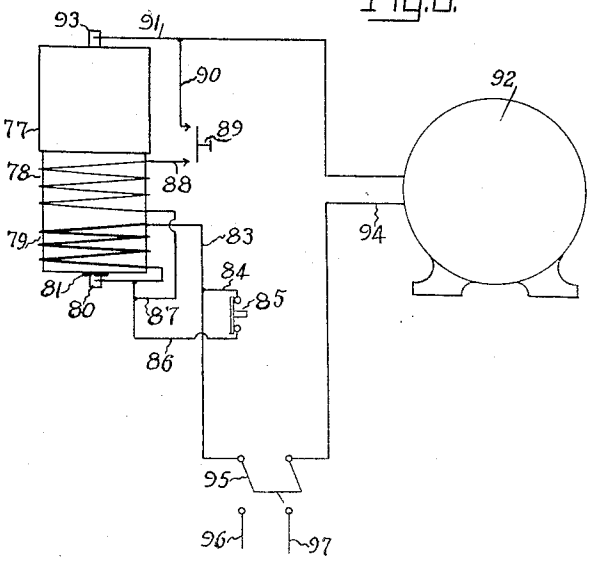

Fig. 17.

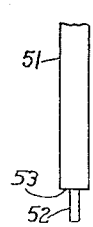

Fig. 18.

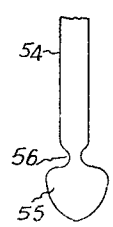

Fig. 19.

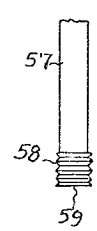

Inventor
ROBERT S. STONER,
BY
Toulmin & Toulmin
Attorneys

Feb. 14, 1939. R. S. STONER 2,147,506

FLOATING WEIGHT ELECTRIC SWITCH

Filed Nov. 3, 1936 3 Sheets-Sheet 3

Fig. 20.

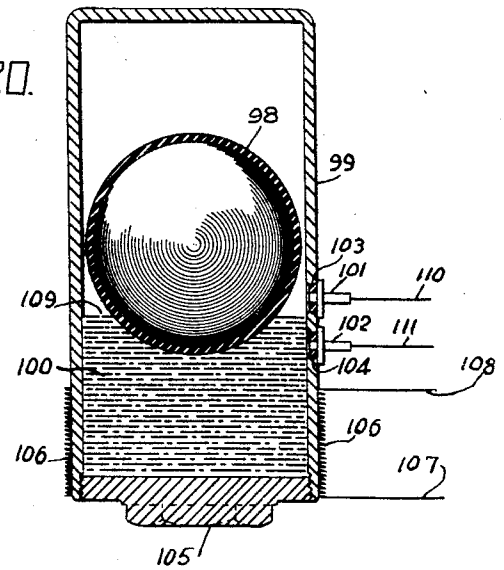

Fig. 21.

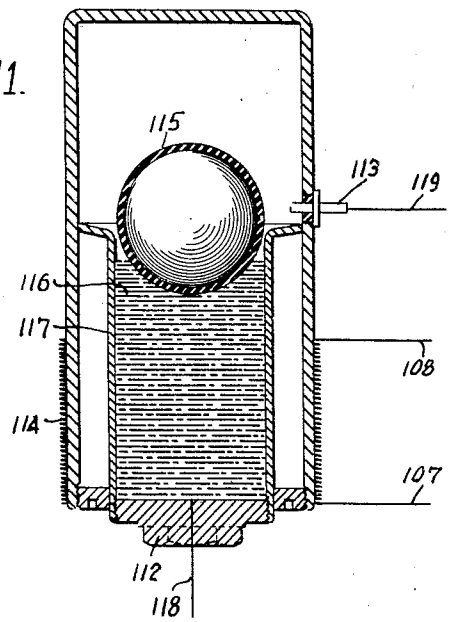

Inventor
ROBERT S. STONER,
By Goulmin & Goulmin
Attorneys

Patented Feb. 14, 1939 2,147,506

UNITED STATES PATENT OFFICE

2,147,506

FLOATING WEIGHT ELECTRIC SWITCH

Robert S. Stoner, Dayton, Ohio, assignor to The Brown-Brockmeyer Company, Dayton, Ohio, a corporation of Ohio

Application November 3, 1936, Serial No. 108,986

15 Claims. (Cl. 200—112)

This invention relates to electric switches and similar circuit breakers, and in particular, to such switches which employ conducting fluids in their operation.

One object of this invention is to provide an electric switch employing a weight float upon a conducting fluid in connection with an electromagnetic coil, in such a manner that the attraction of the weight by the magnetic forces of the coil causes the displaced liquid to engage an electrode which is normally out of contact with the liquid.

Another object is to provide an electric switch having a weight floating upon a conducting liquid, the weight having associated therewith an armature which is adapted to be attracted by the magnetic forces produced by the energization of a coil, the fluid displaced by the downward motion of the weight and armature being caused to rise and engage a contact or electrode which is normally spaced apart from the liquid.

Another object is to provide a switch of the type described above, wherein the conducting liquid is of such a nature that it adheres to the electrode during the upward motion of the float and downward motion of the fluid, thereby causing the breaking of the circuit to take place not between the fluid and the electrode but between different parts of the fluid itself. In this manner the wear and pitting of the electrode, which ordinarily takes place, are effectively reduced or prevented.

Another object is to provide a float-operated switch wherein the fluid consists of mercury having other substances mixed therewith in such a manner as to form a mercury-like liquid, but having the distinctive property of adhering to the electrode and of being drawn out into a thin neck as the liquid surface moves away from the electrode. This thin neck not only causes the breaking of the circuit to take place at a point away from the electrode, but also reduces the amount of current flowing across the neck at the instant of the break because of the increased resistance of the small neck.

Another object is to provide an electric switch having a float operated by a coil in such a manner as to displace a liquid upwardly into engagement with an electrode, the liquid consisting principally of mercury and a foreign substance, such as a metal resembling lead, and preferably forming an amalgam with the mercury.

Another object is to provide an electrode for such a switch, the electrode being of such a configuration as to enhance the adhering action of the conducting liquid, thereby increasing the facility of forming the narrow neck between adjacent portions of the liquid.

Another object is to provide a float-operated electrical switch of such a character as to have a snap action, thereby bringing about the breaking of the circuit in a much quicker period of time than in ordinary switches.

Another object is to provide a motor starting circuit for split phase motors employing a float-operated switch of such a character as to require a lesser amount of current to hold the switch in engagement than to close the switch in the first place.

Another object is to provide a motor starting circuit for a split phase motor, wherein the float-actuated switch is provided with a plurality of windings so that a light-duty push button may be employed in the circuit, one winding being used merely for closing the switch and the other winding being used for holding the switch in its closed position; one winding being automatically cut out as the other winding is energized.

Another object is to provide a method of breaking electrical circuits consisting of passing the electrical circuit through a conducting liquid having an electrode capable of being immersed therein, the liquid and electrode being of such a character that as they are moved apart from each other the liquid is drawn into a narrow neck and subsequently separates, thereby first reducing the amount of current flowing through the neck because of the increased resistance thereof, and finally severing the connection entirely.

In the drawings:

Figure 1 is a central vertical section through the switch of this invention, showing the parts in the position of rest, with the operating coil unenergized.

Figures 2 to 5, inclusive, are views similar to Figure 1, but showing the successive stages of operation of the switch.

Figure 6 is a side elevation of the switch shown in Figures 1 to 5, inclusive.

Figure 7 is a wiring diagram showing the switch of Figures 1 to 6, inclusive, employed in starting a split phase induction motor.

Figure 8 is a diagrammatic view of a modified switch having a plurality of windings, one winding being employed for initially closing the switch and the other for holding the switch in its closed position.

Figures 9 to 19, inclusive, are enlarged views, partly in section, of various types of electrodes

employed in the switch shown in Figures 1 to 6, inclusive.

Figure 20 is a central vertical section through a modified form of switch employing a spherical float.

Figure 21 is a central vertical section through another modified form of switch employing a spherical float.

In general, the switch of this invention consists of a container having a conducting liquid therein, an electrode normally spaced apart from the liquid, a float resting on the liquid, and a coil adapted when energized to attract the float and thereby to cause the level of the liquid to rise and engage the electrode, thereby closing the circuit between the liquid and the electrode. In particular, the liquid employed consists principally of mercury with the addition of a foreign substance, such as lead, which causes the mercury to adhere to the electrode rather than to be separated instantly therefrom, as is the case with pure mercury.

Hitherto, in switches employing mercury, it has been necessary to use evacuated tubes and exceedingly pure mercury in order to avoid leaving a skin-like layer of conducting foreign material between the electrode and the liquid in its receded position. The tubes were evacuated or filled with an inert gas in order to prevent oxidation of the mercury and the subsequent formation of such a layer of foreign material. This effect of foreign matter in a mercury switch employing a glass tube short-circuited the tube and rendered it useless for further action. The present invention, however, deliberately utilizes mercury which is not only not pure, but in contrast, has a foreign substance or substances added thereto to give it a different effect.

When the ordinary pure mercury engages the electrode of the ordinary switch the latter merely pushes the mercury aside, and when the level of the mercury recedes it drops instantly away from the electrode without wetting it. In the present invention, however, the mercury mixture or amalgam adheres to the electrode and does not break away instantly. In contrast, the break of the circuit occurs not between the mercury and the electrode itself, as in switches hitherto made, but between different portions of the mercury mixture at a point remote from the electrode itself. This construction adds to the life of the electrode and prevents wear and pitting.

A circuit is also provided wherein the switch of this invention is employed in starting a split phase induction motor, the switch having the characteristic of requiring a smaller amount of current to hold it in its closed position than to close it in the first place. The switch of this invention also possesses a snap action, which breaks the circuit with great rapidity when a breaking thereof is desired.

Referring to the drawings in detail, Figure 1 shows one embodiment of the switch of this invention as consisting of a lower casing portion 10 having a downwardly extending reduced portion 11, the portions 10 and 11 being preferably of a non-magnetic material. The bottom of the portion 11 is closed by a plug 12, preferably of magnetic material, such as soft iron. The reduced portion 11 is surrounded by a winding forming a coil 13, having an insulating layer 14 thereover. The leads 15 and 16 of this winding are brought out, respectively, to ring-like portions 17 and 18 (Figure 6) which may be engaged by suitable clips, forming no part of the present invention, and facilitating the rapid insertion or removal of the switch.

The central portion of the switch includes a cylindrical casing 19 of non-conducting material, surrounded by the ring-like portions 17 and 18 and terminating in a cap 20 of conducting material, having a ring-like portion 21 for engagement by another clip, and an end portion 22 having an aperture 23 for the reception of one end of an electrode 24. The inner end of the electrode 24 is preferably enlarged, or otherwise provided with a portion 25 projecting therefrom to enhance the adhesion of the conducting material. Arranged to reciprocate vertically within the casing portion 19 is a float 26 of annular form, and having an inner bore 27 within which is arranged one end of an armature 28 connected to the float by the arms 29. The ends of the float are preferably streamlined, as at 30 and 31, so as to permit the passage of the fluid with the least resistance. The armature 28 is of magnetic material adapted to be attracted by the plug 12 when the latter is magnetized through the energization of the coil 13. The arms 29 are likewise preferably streamlined to enhance the passage of the fluid.

The container, consisting of the portions 10, 11 and 19, is partially filled with a fluid 32 of peculiar characteristics. This fluid is preferably of a type which will wet the electrode 24 in such a manner as to cause a thin neck of liquid to be formed as the surface of the liquid recedes from the electrode. A liquid which has been found suitable for this purpose consists of mercury and a foreign material mixed therewith, such as lead in the proportion of one part of lead to six parts of mercury. These proportions, however, are not critical and other proportions and materials may likewise be used to give the mercury an adhering effect upon the electrode.

The electrode itself may be made in a number of different forms, such as are shown in Figures 9 to 19, inclusive, in addition to the form shown in Figures 1 to 5, inclusive. In Figure 9 the electrode 33 consists of a cylindrical rod with a flat end 34. In Figure 10 the electrode 35 has a rounded end 36. In Figure 11 the electrode 37 has a pointed end 38. In Figure 12 the electrode 39 has a cup-shaped concave end 40. In Figure 13 the electrode 41 has an enlarged head 42 with an annular depression 43 at the back thereof. In Figure 14 the electrode 41 of Figure 13 has been provided with a roughened surface 44 upon the head 42. The electrode 45 shown in Figure 15 is provided with a solid enlarged head 46, with a roughened surface 47. The electrode 48 of Figure 16 has been provided with an enlarged conical head 49, with or without annular ridges 50 on the shank thereof. The electrode of Figure 17, designated 51, is provided with a reduced end portion 52, with an annular shoulder 53 separating the two portions of the electrode. The electrode 54 shown in Figure 18 consists of a head 55 having an annular groove 56 between it and the shank. In Figure 19 the electrode 57 is provided with a roughened portion 58 upon the sides thereof, immediately adjacent the end 59. The electrodes shown in Figures 13 to 16, inclusive, and 18, together with the electrodes shown in Figures 1 to 5, inclusive, have been found more suitable than the plainer types of electrodes in Figures 9 to 12, inclusive, due to the increased adhering effect provided by the enlargement of the electrode or the roughening of the end thereof.

It will be understood that the advantages of the invention are not limited to a liquid comprising a mixture of mercury and lead. Other metals, such as antimony, bismuth and tin have been found suitable for mixture with the mercury. It is advisable, however, to employ for the electrode a material which will not amalgamate with the mercury, otherwise, the electrode itself will dissolve somewhat in the course of time. The present invention makes use of this mixture of other substances with the mercury in order that the resultant liquid will adhere to the electrode and be drawn out into a neck-like form when the electrode and liquid are caused to move away from each other.

It will be understood that the switch may be constructed without the iron plug **12** at the bottom thereof. The action would then be that of a solenoid **13** attracting the armature **28**. The iron plug **12**, however, intensifies and concentrates the magnetic action of the winding **13**.

Operation

In the operation of the switch of this invention, the float **26** rests upon or near the surface of the liquid **32**, depending upon the buoyant characteristics. Under such circumstances, if the liquid **32** consists of the mercury mixture described above, the surface of the liquid will be upwardly convex. When the winding **13** is energized by closing the electrical circuit including it, the resulting magnetic field set up attracts the armature or plunger **28**. The force of attraction is at first relatively weak, and increases in strength as the armature **28** moves downwardly in response to the magnetic attraction. This is especially true when the iron plug **12** is used to concentrate the magnetic action of the winding **13**. This characteristic causes the switch to have a snap action so that the armature **28** is moving very rapidly as it approaches the downward limit of its motion. Meanwhile, the liquid displaced by the downward motion of the float **26** is forced upwardly past the spider arms **29**, and through the bore **27** into engagement with the head **25** of the electrode **24**. This action is shown in Figures 1 to 3, inclusive. Figure 1 shows the switch in its open position with the various parts at rest. Figure 2 shows the switch slightly after contact has been made between the electrode and the liquid. Figure 3 shows the switch after a full contact has been made.

The motion of the mercury itself also gives a snap action, corresponding with the snap action of the armature **28** in moving downwardly into the winding **13**. By this action the mercury is mechanically hurled up toward the top of the switch and into contact with the electrode by the downwardly accelerated plunge of the float. By reason of the mixture of the mercury with one or more other substances, as explained above, the mercury adheres to the electrode rather than the electrode being merely pushed into an indentation in the surface of the mercury, as is the case when pure mercury is employed.

When the circuit is broken the float **26** rises and the level of the liquid correspondingly drops. As the liquid surface recedes from the electrode, however, the adhesion of the liquid to the electrode causes the effect shown in Figure 4, whereby the liquid is drawn out into a neck-like form which becomes smaller and smaller as the liquid level falls. This narrowing of the neck causes the electrical resistance thereof to be raised until only a small proportion of the current carried by the switch in its fully closed position can now be accommodated. As the liquid falls still further the neck breaks, as shown in Figure 5, severing the connection between the electrode and the liquid and opening the electrical circuit in which the switch is used. This likewise has a snap action because the two portions of the liquid literally explode apart from one another at the instant of the break. The gas within the switch, which may be either air or inert gas, together with the vaporization of the mercury by reason of the heat produced at the point of break, cause this explosive effect which results in a suppression of the arc. This effect still further reduces the danger of pitting the electrodes or of injuring the various materials in the switch.

Thus, the actual break occurs not at the surface of the electrode, but at a point slightly below it. The break occurs between different portions of the mercury, or other liquid, and not directly between the liquid and the electrode, as in ordinary mercury switches. This action greatly protects the surface of the electrode and reduces the serious pitting effect which occurs when pure mercury is used, as in ordinary switches.

As the level of the mercury recedes from its contact with the head of the electrode upon the deenergization of the winding **13**, the mercury mixture or amalgam leaves the head **25** of the electrode with a rolling action, and a crystallization-like effect is observed. Upon analyzing the mercury mixture which is left upon the electrode head **25**, it is found that the proportion of foreign substances to the mercury is much higher than in the main body of the liquid. This foreign substance becomes a granulated deposit upon the electrode and produces a much finer neck-like action, or a much finer thread of liquid as the surface thereof recedes from the electrode. Thus, assuming lead to be the mixing substance, if the ratio of lead to mercury is one to six elsewhere in the main body of the liquid, the ratio may be as much as one to one on the electrode. This important effect increases the efficiency of the switch without requiring a high mixture of foreign substance in the main body of the liquid itself.

The enlargement upon the electrode, as shown in Figures 1, 13, 14, 15, 16 and 18, merely assists the adhesion of the mercury mixture to the electrode and enhances the formation of the neck or thread as the circuit is broken. The roughened portions shown in Figures 14, 15 and 19 are directed to the same purpose of increasing the adhesion of the liquid.

Moreover, this thread-like or neck-like action which occurs when the circuit is broken, enables the switch to carry a much higher current than is possible with ordinary switches where pure mercury is used, and a direct break is made between the surface of the mercury and the electrode surface. A switch of my invention may carry as much as 50 to 100 amperes of current, an amount much greater than an ordinary switch of the same size and employing pure mercury can carry. The reason for this effect is as stated above, that the neck-like action greatly increases the resistance across the switch and therefore reduces the current actually flowing to a mere fraction of that flowing when the switch is fully closed. The alloy or mercury mixture is drawn out into a form somewhat resembling a water spout. This separation of the point of break from the electrode itself enables the use of a cheap metal for the electrode, as contrasted with

the expensive tungsten or platinum necessary for use with ordinary mercury switches where the break occurs directly at the surface of the electrode. The break between different portions of the amalgam or mercury mixture protects the electrode itself to such an extent that an ordinary soft iron screw used as an electrode has been successfully used to break the circuit of current of 50 to 100 amperes without serious pitting over a considerable period of time.

It will be observed, moreover, that the switch of the present invention may be operated without evacuating the air as the latter does not create an adverse effect by its oxidation of the mercury. The question of impurities in the mercury is a serious problem in ordinary mercury switches, especially those employing glass tubes. As the mercury switch tilts, or the mercury otherwise moves, it tends to leave a trail of impurities between the electrode and the mercury surface, thereby shortcircuiting the switch. In the present invention, however, these impurities do not impede the action of the switch because the tube does not tilt, and a complete path of impurities is never made possible.

Furthermore, the action of the switch itself has a purifying effect upon the mercury mixture so that a clean surface is always presented to the electrode. In the action of the switch it is observed that although the mercury mixture surface is completely coated with impurities, in the position shown in Figure 1, by the time the mercury has risen to engage the electrode these impurities have moved aside like a curtain, and presented a brilliantly reflecting mercury surface to the electrode. Moreover, the float **26** may be spaced with a considerable clearance between it and the side walls of the container **19** because the rising of the mercury itself into this space acts as a kind of cushion and spacing agent, preventing the sticking of the float to the side walls. This arises from the difficulty of passing mercury through small apertures and is very useful when the switch is employed in connection with vibrating machinery. The switch of the present invention will also operate at varying angles such as would be encountered in an airplane of a motor car, and is not subject to the disadvantages of tilting the switch present in ordinary mercury switches.

Moreover, if the switch is inactive for a considerable period of time and an electrode of ordinary metal, such as iron or aluminum is used, the coating or oxide or other impurities which the metal may acquire, do not affect the switch adversely after a few closures thereof. It has been found that with this mercury mixture instead of pure mercury the mixture exerts an effect similar to tinning the electrode where it is impure or coated with rust and like substances at the start of the operation.

In addition to the foregoing qualities, this switch possesses the additional feature of releasing the float and opening the circuit with much less current flowing through the winding **13** than the amount of current required to attract the float and armature and close the switch. This "teaser" action or unequal effect as regards the amount of current necessary to close and open the switch, respectively, is of great value in many electrical circuits and is particularly useful in connection with circuits including motors having starting windings such as split phase induction motors.

Improved switch unit for split phase motor circuits

In Figure 7 there is shown a split phase motor circuit having windings **60**, **61**, **62** and **63** and split phase or starting windings **64**, **65**, **66** and **67** arranged in staggered sequence between the windings **60** to **63**, inclusive. The windings **60** and **62**, for example, are wound in an opposite direction from the windings **61**, and **63**, whereas the windings **64** and **66** are wound in an opposite direction from the windings **65** and **67**. The windings **60** to **63**, inclusive, are led out to the lines **68** and **69**, whereas the windings **64** to **67**, inclusive, terminate in the lines **70** and **71**. The lines **70** and **68** are connected to one another, as at **72**, and terminate in the connection plug **73**. From the opposite terminal of this plug the line **74** runs to the lower ring **17** of the mercury switch **75**. To this ring **17** is connected one lead of the coil or winding **13**, the opposite end being connected to the line **69**. The line **71** is connected to the cap **23** which holds the electrode **24**.

In the operation of the circuit shown in Figure 7 the connection **73** is plugged into a usual current outlet, an additional manual switch **76** being shifted to close the circuit. When this occurs current flows through the coil **13** of the switch **75** and closes the switch, in the manner previously described. This closing of the switch causes a connection to be made through the mercury **32** and the electrode **24** between the lines **74** and **69**, thereby energizing the starting windings **64**, **65**, **66** and **67**, as well as the windings **60**, **61**, **62** and **63**. The motor then starts its rotation, and as it comes up to speed the reverse electro-motive force arising from opposing the impressed current, causes the current in the switch winding **13** to drop steadily until at a certain definite speed approaching its full running speed (say 1500 R. P. M for a 1750-R. P. M. motor), the current becomes insufficient to hold the armature **28** against the buoyant effect of the float **26** in the mercury mixture **32**.

Due to the fact that a greater amount of current is required to close the switch than to release and open it, a lag effect occurs in association with the main field and the starting field. The main field windings **60** to **63**, inclusive, are usually of heavy wire with a relatively low resistance and high reluctance, whereas the starting field windings **64** to **67**, inclusive, arranged 90 degrees in rotation therefrom, are of high resistance and low reluctance. As the current drawn by the motor drops as it increases its speed past the critical point where it is insufficient to hold the mercury **75** in a closed position, the switch **75** opens, removing the starting windings **64** to **67**, inclusive, from the circuit and leaving only the main field windings **60** to **63**, inclusive. The iron plug **12** intensifies the magnetic action and can be varied in size and magnetic characteristics in order to adjust the lag characteristics arising from this effect. The motor continues to rotate under the effect of its main windings **60** to **63** alone until it is stopped by opening the main switch **76**. When the main switch **76** is again closed the main and starting field windings then draw the full amount of amperage possible, and the mercury switch **75** is again closed. It again remains closed until the motor speed reaches the critical point at which the current flowing through the coil **13** is insufficient to hold down the armature **28**, whereupon the switch again opens and the main fields

operate without the starting fields, in the manner heretofore described.

Multiple winding mercury switch circuit

The mercury switch circuit shown in Figure 8 is especially adapted for starting split phase motors and enables the use of light-duty starting and stopping switches, such as ordinary push button switches not particularly adapted to the passage of heavy current. For this purpose the mercury switch 77 is provided with a winding 78 of light wire and a winding 79 of heavy wire. The light winding 78 serves as a switch-closing winding and the heavy winding 79 as a holding winding for holding the switch in a closed position. The internal arrangement of the switch 77 is the same as that shown in Figures 1 to 5, inclusive, except that the iron plug 12, here designated 80, is insulated by the insulating portion 81 from the remainder of the portion 11. Connected to this end plug 80, which serves as an additional terminal on the switch, is the line 82 forming the lead from one end of the heavy winding 79, the other lead 83 of which consists of one of the power lines, an auxiliary line 84 from which leads to one terminal of the stopping push button switch 85. From the opposite terminal of the latter the line 86 runs to the lead 82 of the heavy winding or holding coil 79. From the line 86 the line 87 runs to one lead of the fine winding or closing coil 78, the opposite lead 88 of which is brought out to one terminal of the starting push button switch 89. From the opposite terminal of this switch the line 90 runs to join the line 91 interconnecting the windings of the motor 92 with the terminal 93 of the electrode 24. The remaining line 94 is the power line leading to the motor 92. A line switch 95 makes and breaks the circuit between the lines 83 and 94 and the current mains 96 and 97, respectively.

In the operation of the circuit shown in Figure 8, the general action of the switch is as described previously. When the starting push button switch 89 is closed the circuit is closed between the lines 90 and 88, thereby energizing the fine wire closing coil 78 by way of the lines 87, 86, the stopping push button switch 85 and the lines 84 and 83. The energization of the closing coil 78 attracts the armature 28 and float 26, and causes the mercury mixture 32 to rise and engage the electrode 24, closing the circuit between the terminals 93 and 80. When this occurs the current flows from the line 97, through the main switch 95, the line 94, the motor 92, the line 91, the terminal 93, the switch 77, the terminal 80, the line 82, the holding winding 79, the line 83 and the main switch 95 to the line 96. This energizes the holding coil 79 and causes it to hold the armature 28 and float 26 in their lower positions even when the push button switch 89 is released by the operator.

The closing winding 78 is therefore completely deenergized the instant the operator releases the starting switch 89. Even though the operator keep the starting switch 89 closed, however, the winding 78 is not endangered by the flow of heavy current because it is shunted out by the connection between the terminals 93 and 80 as soon as the switch closes. Consequently, the circuit shown in Figure 8 is capable of employing very light-duty switches and no damage can result to the switches even if the operator keeps the push button switches closed for an appreciable period of time. The closing winding 78 is cut out automatically and instantly by the action of the holding winding 79 as soon as the switch closes. If the operator depresses the stopping button 85, however, the motor circuit is instantly broken as this action bridges the terminals of the holding coil, the deenergization of which instantly releases the armature 28 and float 26. Accordingly, no damage can result to the windings even though the operator maintains the stopping switch 85 in a depressed position for an appreciable period of time.

Ball float switch

The modified switch shown in Figures 20 and 21 employs a ball 98 within a cup-like casing 99 having mercury or a similar conducting liquid 100 therein. The side of the casing 99 is pierced by electrodes 101 and 102, insulated by the insulating portions 103 and 104 from the casing 99. Optionally the casing 99 may itself be made of insulating and non-conducting material. A plug 105 closes the bottom of the casing 99 and a winding 106 surrounds this casing, the leads 107 and 108 being connected to a suitable source of electrical energy, in the manner previously described in connection with the other forms of switches.

The float 98 consists of a ball which is of iron or which has an iron core. If the ball is all of iron it is preferably coated with an insulating coating, such as synthetic resin, hard rubber, etc. When the winding 106 is energized the magnetic field thereby set up attracts the float 98, forcing it downwardly and causing the top surface 109 to rise to the point where it simultaneously immerses the electrodes 102 and 101. This closes the circuit and causes the energization of the lines 110 and 111 leading from the electrodes 101 and 102. The use of the ball float 98 effectively prevents any sticking because it will roll up and down the inner walls of the casing 99.

The switch shown in Figure 21 is similar to that shown in Figure 20 except that the end plug 112 replaces the terminal 102 and the terminal 113 replaces the terminal 104. As the winding 114 is energized, in a manner similar to the winding 106, the float 115 is forced downwardly into the mercury 116 within a cup 117, causing the mercury to overflow into the space adjacent the electrode 113. Accordingly, the circuit is closed between the line 118 connected to the plug 112 and the line 119 leading from the electrode 113.

Time delay switch

The switch shown in Figures 1 to 6, inclusive, can be employed as a time delay switch by causing the apertures between the armature 28 and the float 31 to be restricted in size so as to impede the free passage of fluid therethrough. Under these circumstances, the float and armature will not become operative to make or break the circuit instantly after the coil 13 has become energized or deenergized, because the opposition offered by the small apertures adjacent the arms 29 will exert a cushioning action by the mercury and retard the action of the switch. In this manner the switch is given a dash pot action which provides a time delay feature. It will be also observed that by reducing the clearance between the armature 28 and the reduced portion 11 of the lower casing portion 10, an additional dash pot action would be obtained between the armature 28 and the reduced portion 11.

It will be further observed that by placing the coil 13 at the top of the switch, so as to make the switch a normally closed instead of a normally open switch like the switch in Figures 1 to 6, inclusive, the thus modified switch can be used as a time delay overload protection switch for electrical circuits, especially where the mercury is made to pass through restricted orifices, as described above. Under these conditions the current normally flowing through the switch coil would be insufficient to open this normally closed switch. When an overload of current passes through the coils, however, it will actuate the armature and float in such a manner as to open the circuit between the mercury mixture and the electrode. If, however, the surge is of merely momentary duration so that the motor windings can carry it without damage, the dash pot action of the mercury in passing through the restricted apertures, such as those existing between the armature 28 and the float 31, will interpose a time delay before the switch can become operative to open the motor circuit. This time delay is efficient in preventing stoppages of the motor caused by momentary overloads which the motor windings can conveniently carry.

It will be understood that I desire to comprehend within this invention such modifications as come within the scope of the claims and the invention.

Having thus fully described my invention, what I claim as new and desire to secure by Letters Patent, is:

1. In combination, a container, a conducting liquid in said container, an electrode, means associated with said container for selectively creating a magnetic field, and float means responsive to the creation of said magnetic field for displacing said liquid into engagement with said electrode, said liquid being adherent to said electrode to form an elongated portion between said electrode and said liquid in response to the separation of said electrode and said liquid.

2. In combination, a container, a conducting liquid in said container, an electrode, means associated with said container for selectively creating a magnetic field, and float means responsive to the creation of said magnetic field for displacing said liquid into engagement with said electrode, said liquid comprising a mixture of mercury and a material rendering said liquid adherent to said electrode and attenuable into a slender column upon the separation of said electrode and said liquid.

3. In combination, a container, a conducting liquid in said container, an electrode, means associated with said container for selectively creating a magnetic field, and float means responsive to the creation of said magnetic field for displacing said liquid into engagement with said electrode, said liquid comprising a mixture of mercury and a material amalgamatable therewith rendering said liquid adherent to said electrode and attenuable into a slender column upon the separation of said electrode and said liquid.

4. In combination, a container, a conducting liquid in said container, an electrode, means associated with said container for selectively creating a magnetic field, and float means responsive to the creation of said magnetic field for displacing said liquid into engagement with said electrode, said liquid being adherent to said electrode and attenuable into a slender column upon the withdrawal thereof, said electrode being of material resistant to dissolubility by said liquid.

5. In combination, a container, a conducting liquid in said container, an electrode, adherent to said liquid means associated with said container for selectively creating a magnetic field, and float means responsive to the creation of said magnetic field for displacing said liquid into engagement with said electrode, said liquid comprising a mixture of mercury and a material renderng said liquid adherent to said electrode and attenuable into a slender column upon the separation of said electrode and said liquid, said electrode being of material resistant to amalgamation with said mercury.

6. In combination, a container, a conducting liquid in said container, an electrode, means associated with said container for selectively creating and abolishing a magnetic field, and float means responsive to the creation of said magnetic field for displacing said liquid into engagement with said electrode and responsive to the abolition of said magnetic field for attenuating said liquid into a slender column attached to said electrode, said liquid comprising a mixture of mercury and a metal rendering said liquid adherent to said electrode upon the separation of said electrode and said liquid.

7. In combination, a container, a mercury alloy in said container, an electrode, means adjacent said container for selectively creating and abolishing a magnetic field, and float means responsive to the creation of said magnetic field for displacing said liquid into engagement with said electrode and responsive to the abolition of said magnetic field for attenuating said mercury alloy into a slender column attached to said electrode, said mercury alloy comprising a mixture of mercury and lead.

8. In combination, a container, an electrode, a conducting liquid in said container adherent to said electrode, means adjacent said container for creating a magnetic field, and an apertured float responsive to the creation of said magnetic field for displacing said liquid through said aperture into contact with said electrode, said float adjacent said aperture having walls inclined relatively to the axis of said float whereby to offer a relatively low resistance to the passage of said liquid therethrough.

9. In combination, a container, an electrode, a conducting liquid in said container adherent to said electrode, means adjacent said container for creating a magnetic field, and float-actuated means responsive to the creation of said magnetic field for moving said liquid and said electrode relatively to each other, said electrode having a roughened surface whereby to enhance the adhesion of the liquid thereto.

10. In combination, a container, an electrode, a conducting liquid in said container adherent to said electrode, means adjacent said container for creating a magnetic field, and float-actuated means responsive to the creation of said magnetic field for moving said liquid and said electrode relatively to each other, said electrode having a projecting portion thereon whereby to assist the adhesion of the liquid thereto.

11. In combination, a container, an electrode, a conducting liquid in said container adherent to said electrode, means adjacent said container for creating a magnetic field, and float-actuated means responsive to the creation of said magnetic field for moving said liquid and said electrode relatively to each other, said electrode having an enlarged head whereby to assist the adhesion of the liquid thereto.

12. In combination, a container, an electrode, a conducting liquid in said container adherent to said electrode, means adjacent said container for creating a magnetic field, and float-actuated means responsive to the creation of said magnetic field for moving said liquid and said electrode relatively to each other, said electrode having a tip with a recess therebehind whereby to assist the adhesion of the liquid thereto.

13. In combination, a container, an electrode, a conducting liquid in said container adherent to said electrode, means adjacent said container for creating a magnetic field, float-actuated means responsive to the creation of said magnetic field for moving said liquid and said electrode relatively to each other, and means at the tip of said electrode for increasing the adhesion of the liquid thereto.

14. In combination, a container, an electrode, a conducting liquid in said container adherent to said electrode, and means responsive to the withdrawal of said electrode from said liquid for initially forming an elongated column of liquid between said electrode and the main body of said liquid and for finally severing said elongated column.

15. In combination, a container, an electrode, a mixture of mercury and at least one other substance in said container whereby to cause said mercury mixture to adhere to said electrode, and means responsive to the separation of said electrode and said mercury mixture for forming an elongated column of mercury mixture which diminishes in size to the breaking point as the separation increases between said electrode and the main body of said mercury mixture.

ROBERT S. STONER.