Jan. 29, 1946. W. MacV. BARKER 2,393,878

CLAMP FOR PRINTING PRESS PLATES

Filed Dec. 2, 1944 2 Sheets-Sheet 1

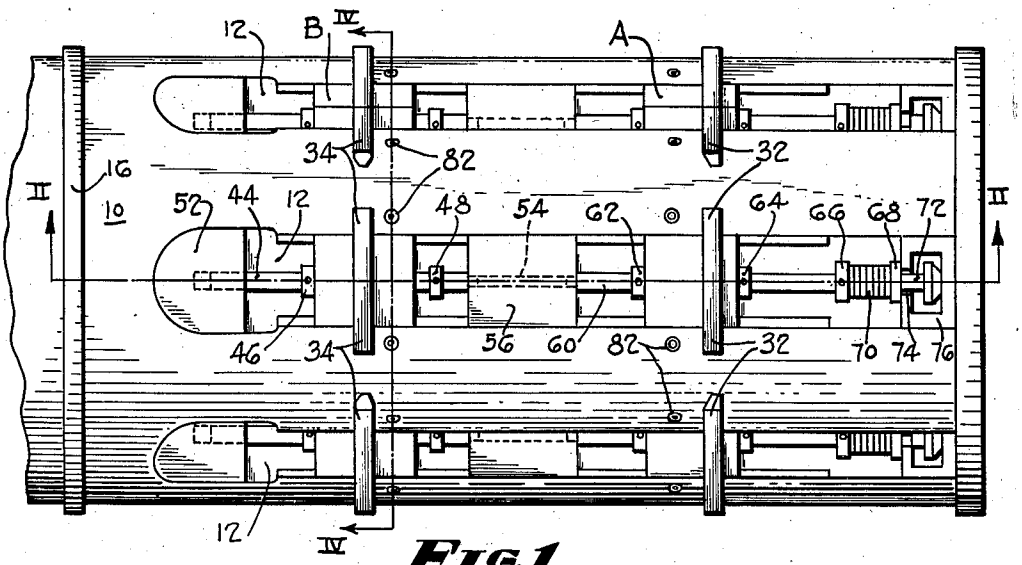

FIG. 1

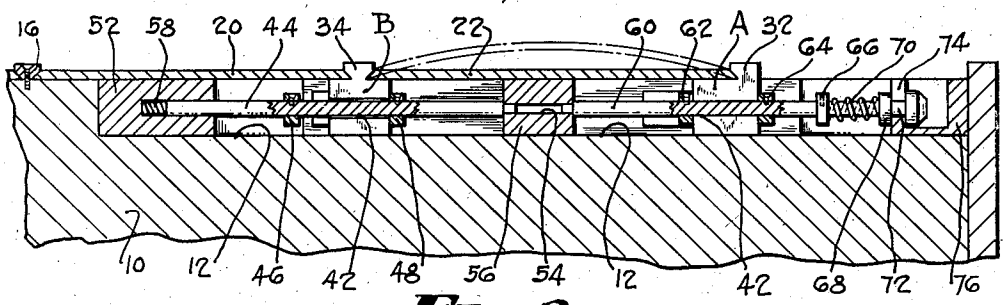

FIG. 2

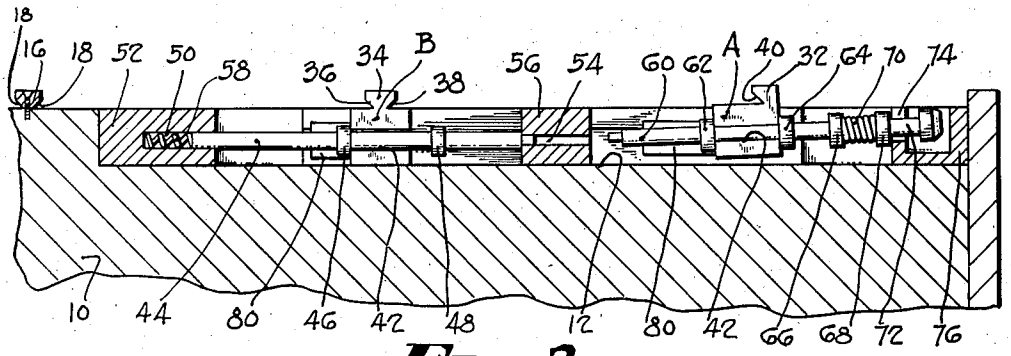

FIG. 3

WITNESSES

INVENTOR.
WAYNE MacV. BARKER
BY Louis Mecho
ATTORNEY

Jan. 29, 1946. W. MacV. BARKER 2,393,878

CLAMP FOR PRINTING PRESS PLATES

Filed Dec. 2, 1944 2 Sheets-Sheet 2

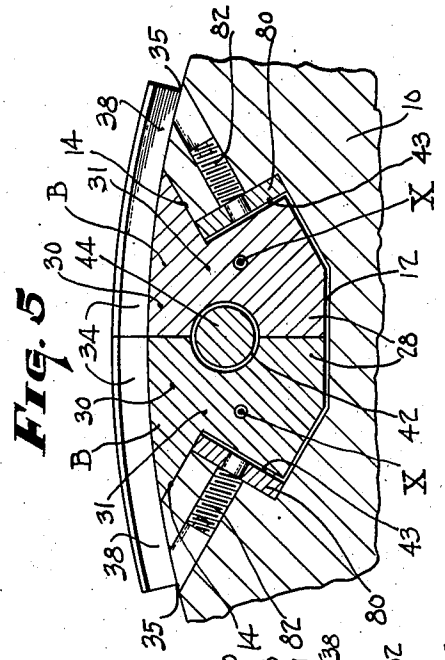

FIG. 5

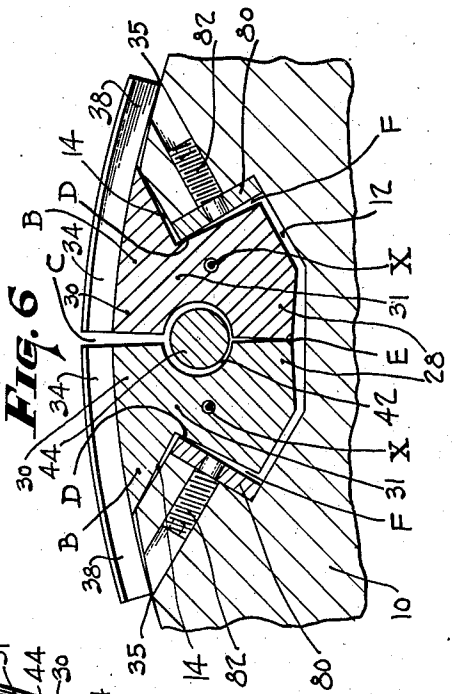

FIG. 6

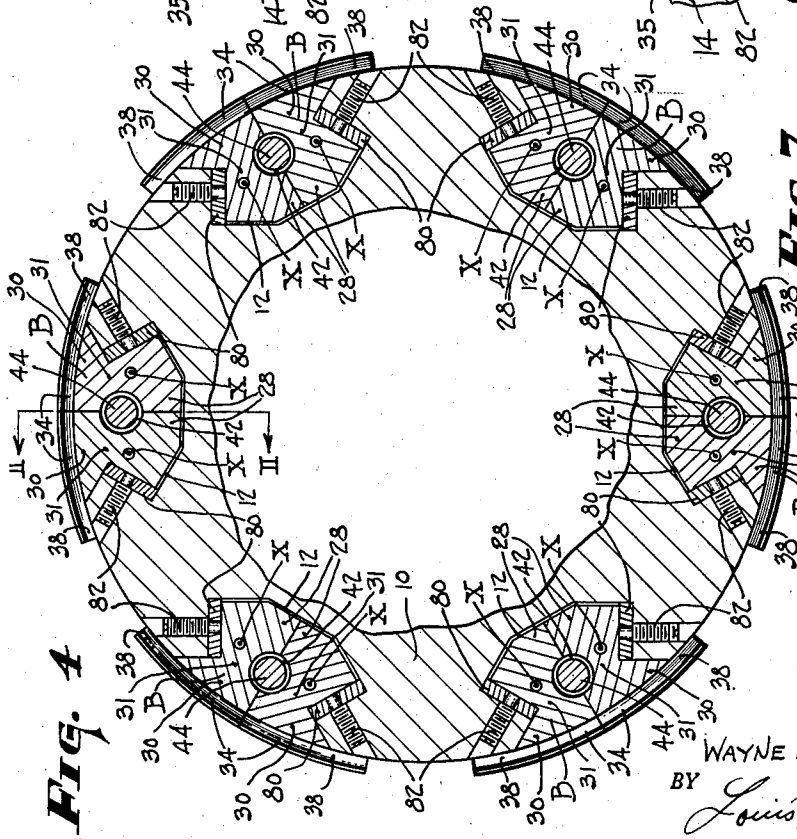

FIG. 4

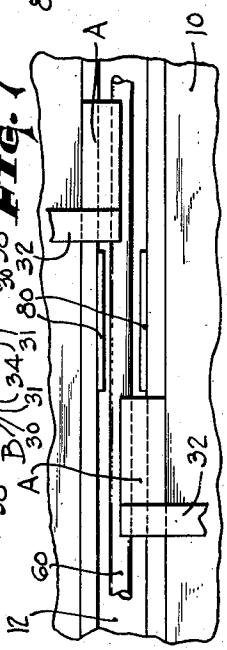

FIG. 7

INVENTOR.
WAYNE MacV. BARKER
BY Louis Necho
ATTORNEY.

Patented Jan. 29, 1946

2,393,878

UNITED STATES PATENT OFFICE

2,393,878

CLAMP FOR PRINTING PRESS PLATES

Wayne MacVeagh Barker, Philadelphia, Pa.

Application December 2, 1944, Serial No. 566,326

4 Claims. (Cl. 101—378)

In the art of printing, it is now customary to cast the type and cuts to be used in the form of curvilinear plates which are detachably secured to a supporting rotary press cylinder by clamps movable in circumferentially spaced, longitudinal grooves and engaging the opposite vertical edges of the plates, means being provided for actuating said clamps into or out of engagement with said plates.

In operation, the high speed rotation of the press cylinder produces centrifugal force of such intensity that the center portions of the plates tend to buckle or bulge away from the surface of the press cylinder. This withdraws the vertical edges of the plates away from the clamps. If, as a result, the edges of a plate are completely disengaged from the securing clamps, the entire press may be seriously damaged.

It is, therefore, one object of my invention to produce an improved clamp construction by means of which the danger of damage due to disengagement of a plate from the securing clamps is considerably reduced or eliminated.

In use, the supporting cylinder carrying the plates rotates in constant pressure against a contact cylinder. Therefore, the plates which are bulged or buckled by centrifugal force will be violently pushed back against the supporting cylinder by the contact cylinder with each revolution of the plate supporting cylinder. This results in pounding of the press plate against the supporting cylinder.

It is, therefore, a further object of my invention to produce an improved clamp construction and assembly by which the shock resulting from the pounding action referred to is effectively absorbed.

Like other parts, the clamps are subject to wear and, due to their expense, they may not be readily discarded and replaced.

It is, therefore, a further object of my invention to produce an improved clamp which will operate satisfactorily even after a relatively great amount of wear has developed.

A still further object is to devise an improved arrangement whereby the clamps may be removed from the grooves in which they operate, with minimum dismantling or disturbance of other coacting parts.

A still further object is to devise an improved arrangement by means of which the wearing strips usually provided between the clamps and the grooves in which they move, may be removed and replaced without dismantling any other parts.

A still further object is to produce an improved structure in which the tendency of centrifugal force to throw out the lubricant usually used between the clamps and the wearing strips and the walls of the grooves in which they move is greatly reduced.

These and other objects are effected by my invention as will be apparent from the following description and claims taken in connection with the accompanying drawings, forming a part of this application, in which:

Fig. 1 is a fragmentary top plan view of a rotary press cylinder of a conventional printing press, such as the "Hoe" press, to which my novel clamp is applied;

Fig. 2 is a fragmentary, longitudinal vertical section taken along line 2—2 of Fig. 1 or 4, showing a portion of a press cylinder with press plates clamped in operating position;

Fig. 3 is a view similar to Fig. 2, with the press plates removed;

Fig. 4 is an enlarged vertical section on line 4—4 of Fig. 1;

Fig. 5 is an enlarged view of a portion of Fig. 4, showing the apparatus when not in operation;

Fig. 6 is a view similar to Fig. 5, showing the parts when the cylinder is rotating; and

Fig. 7 is a fragmentary top plan view showing the manner in which the clamp sections embodying my invention may be withdrawn from the grooves in which they move.

Referring to the drawings in which like reference characters indicate like parts, 10 designates a rotary cylinder of a conventional press such as the well known "Hoe" printing press, only slightly more than one-half of the cylinder being shown. The cylinder 10 is provided with a number of equally spaced, dovetailed grooves 12 which extend longitudinally of the cylinder, as clearly shown in Figs. 1 and 4. In Fig. 4, I have shown six of these grooves, but it is to be understood that the number of grooves forms no part of the present invention. The grooves 12 open at their upper end into dovetailed recesses 14 which are coextensive with the grooves. The cylinder 10 is provided at its center with a fixed annular abutment 16 which projects beyond the circumference of the cylinder and which is provided with oppositely beveled edges 18. The abutment 16 divides the cylinder into two identical halves, only one of which is shown and described.

As shown, the cylinder is adapted to carry two or more curvilinear plates 20 and 22, which carry the desired type and cuts, and which are detachably clamped to the cylinder by means of clamps

A and B movable in the grooves 12. The vertical edges of the plates 20 and 22 are beveled, as clearly seen in Fig. 2.

As will be seen from Figs. 4 to 6, the grooves 12 and recess 14 are both of a dovetail shape, but they are disposed in apposition, with the tapered or narrow portions thereof contiguous. The clamps A and B are also shaped to fit the grooves and recess. As can be seen in Figs. 4 to 6, each clamp is made of two similar sections, each of which includes a lower enlarged portion 28 and an enlarged upper portion 30, the portions 28 and 30 being connected by a reduced portion 31 and seating in the groove 12 and recess 14, respectively. It will be noted that the center of gravity of each clamp section is located at the point X in the lower enlarged portion 28 thereof. The upper portions 30 of the clamps A and B are provided with abutments 32 and 34, respectively, which extend beyond the circumference of the cylinder and the press plates carried thereby, as best seen in Fig. 2. The abutments 34 of the clamp sections B are provided with oppositely beveled edges 36 and 38 to engage the adjacent edges of the plates 20 and 22, the inner edge of the plate 20 being engaged by the beveled edge 18 of the central abutment 16. The abutments 32 of the clamp sections A are provided with one beveled edge 40 which engages the outer edge of the plate 22. The lower portions 28 of the clamp sections A or B are recessed so as to form a bore 42 through which the shafts actuating the clamps A and B pass. Each of the clamps B is actuated by a shaft 44 passing through the bore 42 and carrying adjustable nuts or stop collars 46 and 48. The inner end of the shaft 44 is adapted to enter a bore 50 formed in a fixed block 52 or in a part of the cylinder. The outer reduced end of the shaft 44 is adapted to enter a bore 54 in a block 56 freely movable in the groove 12. The shaft 44 is normally biased outwardly, or to the right as viewed in Fig. 2, by a spring 58 seated in the bore 50.

Each of the clamps A is actuated by a shaft 60 passing through the bore 42 in the clamp and carrying adjustable nuts or stop collars 62 and 64. The inner end of the shaft 60 is reduced and is adapted to enter the other end of the bore 54 of the movable block 56. Near its other end, the shaft 60 carries a fixed collar 66 and a movable collar 68 between which is confined a spring 70. The spring 70 is stronger than the spring 58 and biases the shaft 60 inwardly or to the left of Fig. 2. The outer end 72 of the shaft 60 detachably engages a slot 74 in a bracket 76. An actuating and locking arm (not shown) moves the shafts 60 outwardly, or to the right as viewed in Fig. 2, against the action of the spring 70. The actuating arm referred to and the means by which movement of said arm is transmitted to said shafts are conventional and hence not shown nor described. It is sufficient to state that the actuating arm moves all the shafts 60, around the entire circumference of the cylinder, simultaneously, and that said arm is not directly secured to the shafts 60 themselves. Between the clamp sections and the walls of the grooves 12 are interposed wearing strips 80 which are retained in position by externally accessible dog screws 82, the heads of which are countersunk as shown in Figs. 5 and 6. By reference to Fig. 5, it will also be noted that a predetermined amount of clearance is provided between the shafts 44 and 60 and the bores 42 through which they pass.

Operation

The actuating arm is moved so as to actuate the shafts 6 to the right, as viewed in Fig. 2, against the action of the spring 70. This enables the springs 50 to push the shafts 44 and blocks 56 to the right also. In this position, the clamps A and B are also in their extreme right-hand positions, in which the beveled edges 36, 38 and 40 are out of engagement with the edges of the adjacent plates 20 and 22, which may now be removed. The parts will now appear as shown in Fig. 3. New plates can now be put in and, as soon as the locking and actuating arm is released, the spring 70 will return the parts to the position shown in Fig. 2, in which the plates 20 and 22 are tightly clamped.

As the cylinder rotates at high speed, the plates, due to centrifugal force, tend to bulge outwardly, as shown in a greatly exaggerated manner by the dotted lines in Fig. 2. When this happens, the clamps A and B, under action of the spring 70, will be moved axially of the cylinder to maintain contact with the edges of the plate, thus preventing the plates from flying off and wrecking the machine.

As the cylinder rotates in contact with a pressure cylinder, not shown, the bulged plates 20 and 22 are pressed back against the cylinder 10, thus producing a reciprocating pounding action against the clamps A and B. This action produces wear along the contacting faces of the clamps and the wearing strips, the wear being naturally greater on the wearing strips than on the faces of the clamps. In order to remove the strips for replacement, it is merely necessary to disengage the dog screws 82 and then move the strips longitudinally of the grooves until they clear the corresponding clamp sections, as shown in Fig. 7. The strips may now be pulled out from the grooves 10 and replaced with new ones without in any way disturbing the rest of the assembly.

To remove the clamp sections from the grooves, the sections of the clamps A are staggered longitudinally until they clear their respective wearing strips, as shown in Fig. 7. The clamp sections on each shaft 60, together with their supporting shaft, can then be pulled out of their respective grooves, the shafts 60 having been first disengaged from the bores 54 and the slots 74. With the shafts 60 and the clamps A removed, the shafts 44 are disengaged from the bores 50, and, with the sections of the clamps B staggered as described, the shafts 44 and the clamps B may be removed out of their respective grooves.

The clamp sections 28 fit snugly in the grooves 12, only enough clearance being provided to permit ready sliding of the clamps in the grooves. Such clearance is represented at 43 in Fig. 5. When the cylinder is rotated, the clamps are subjected to centrifugal force which moves them radially outwardly until stopped by the wearing strips. During their initial radial movement, the abutting faces of the clamp sections are parallel and slightly spaced and when the clamp sections first abut their respective wearing strips, they contact the strips along their entire area. This is the expected result of the centrifugal force acting on the clamp sections. However, I have found by observation of wear strips used in a cylinder made according to the invention and actually run and used under actual working conditions, that the wearing strips first show signs of impact and wear along the portions thereof immediately inwardly of the points D. From this

I assume that, as the cylinder rotates, the clamp sections intermittently assume the position shown in Fig. 6 which is the only position consonant with the signs of impact and which develope on the wearing strips, first, and ultimately on the corresponding portions of the abutting faces of the clamp sections. While I am not able to determine exactly what takes place, I believe this result is due to the location of the center of gravity of the clamp sections with reference to the wear strips and the reduced opening formed at the junction of the grooves **12** and **14**. By calculation, it can be seen that the center of gravity of the clamp sections is at about the point X or spaced inwardly and laterally from the points D. Due to the fact that the combined cross sectional width of the inner portions of the clamp sections is greater than the width of the opening measured along a line connecting the points D, and because the center of gravity of the left-hand clamp section, for example, is at X, or to the right, as viewed in Fig. 5, of a radius passing through the point D of the wearing strip of this clamp section, the centrifugal force will, after the clamp section has moved outwardly into abutment with its wearing strip, impose a turning moment (in counterclockwise direction) about the point D thus causing the clamp section to rotate a slight extent in counterclockwise direction. Similarly, and for the same reasons, centrifugal force imposes on the right-hand clamp section a turning moment in clockwise direction. The rotation of the clamp sections in opposite directions causes two clamp sections to abut against each other at E. The rotative movements produce inverted V-shaped clearances between the lower portions of the wearing strips **80** and the clamp sections **28**, as indicated to an exaggerated extent at F in Fig. 6, and also V-shaped clearances between the upper portions of the clamp sections, as indicated to an exaggerated extent at C in the same figure.

The rotation of the clamp sections about the line or point D causes the outer end portions **35** of its abutments **34** to be drawn radially inwardly against the plate **20** or **22** to hold the same firmly against the cylinder **10**. This turning moment thus causes the outer end portion of the abutment constantly to bear radially inwardly against and to clamp the plates **20** or **22** against the cylinder.

It will be noted that the shafts **44** of the clamps B are held relative to the cylinder by the blocks **52** and **56**, and that there is sufficient clearance between the shafts and the bores **42** so that the surfaces of the bores **42** never touch the shaft. On the other hand, the inner ends of the shafts **60** of the clamps A are held at one end by blocks **56**, but the outer ends of these shafts are movable in the slots **74**. The outer ends of the shafts **60** are, in effect, held by the clamps A and the clearance between these shafts and the bores of the clamps A is sufficient only to permit free sliding. In operation, therefore, the centrifugal force of the shaft is imposed on the clamps A and increases the turning moment exerted on the clamps A. In other respects, the scheme of operation of the clamps A is the same as that of the clamps B.

What I claim is:

1. In a printing press including a cylinder adapted to support a curved impression plate, means for locking said plate in position including a clamp formed of two complementary, identical sections, each of said sections having an outer portion, an inner portion and an arcuate abutment carried by each of said outer portions and projecting beyond the circumference of the cylinder for engaging the curved edge of said plate, said abutments being parallel to the circumference of said cylinder when said cylinder is stationary, the juxtaposed faces of said clamp sections being flat and normal to a horizontal plane passing through the axis of rotation of said cylinder, there being complementary arcuate recesses in said flat faces which, when said clamp sections abut each other, form a bore disposed parallel to the axis of rotation of said cylinder and substantially centrally of said clamp, there being a groove formed longitudinally of said cylinder and having an outer portion for seating the outer portions of said clamp sections and an inner portion for seating the inner portions of said clamp sections, the outer portion of said groove being defined, in part, by converging walls sloping from the surface of the cylinder toward a line passing through the center of the groove and normal to the axis of rotation of said cylinder, and the inner portion of said groove being defined, in part, by diverging walls beginning at the lower ends of said converging walls and sloping away from said line, the width of said groove at the junction of said converging and diverging walls being less than the width of either the outer or inner portion of said groove, the walls of said clamp sections being shaped to provide surfaces parallel to said converging and diverging walls, respectively, whereby a reduced portion is produced between the inner and outer portions of said clamp sections corresponding to, and registering with the reduced width portion of said groove formed at the junction of said converging and diverging walls, and means for actuating said clamp into and out of engagement with said plate including a shaft extending through said bore, means for engaging said shaft with said clamp for joint movement, and means for actuating said shaft and said clamp longitudinally of said cylinder.

2. The structure recited in claim 1 in which said cylinder is provided with a plurality of grooves and a plurality of clamps in said grooves, together with means for actuating each of said clamps.

3. The structure recited in claim 1 in which the width of the groove, at its restricted portion, is greater than the width of the inner portion of one of the clamp sections, but is less than the total width of the inner portions of a pair of sections constituting a complete clamp, and in which said clamp sections are movable longitudinally of each other whereby said clamp sections may be removed singly, transversely of said groove.

4. The structure recited in claim 1 together with wearing strips between the diverging walls of the groove and the corresponding portions of the clamp sections, and externally operable means for securing said strips to said walls, whereby said strips may be secured to, or disengaged from said walls and removed from the groove without removing said clamp or said shaft from said groove.

WAYNE MacVEAGH BARKER.