United States Patent [19]

Anderson, Jr.

[11] **3,880,245**

[45] **Apr. 29, 1975**

[54] **EXHAUST NOISE ATTENUATING SYSTEM WITH MUFFLER FOR PNEUMATIC TOOLS**

[75] Inventor: **Carl G. Anderson, Jr.**, Utica, N.Y.

[73] Assignee: **Chicago Pneumatic Tool Company**, New York, N.Y.

[22] Filed: **Nov. 21, 1973**

[21] Appl. No.: **418,033**

[52] **U.S. Cl.** ..... **173/163;** 173/DIG. 2; 181/36 A

[51] **Int. Cl.** **B23b 45/04**

[58] **Field of Search** ..... 173/DIG. 2, 163; 181/36 A, 181/33 A, 33 E

[56] **References Cited**

UNITED STATES PATENTS

2,950,775	8/1960	Zwayer	181/36 A X
2,966,138	12/1960	Quackenbush	181/36 A X
3,323,615	6/1967	Kessler	181/36 A X
3,384,200	5/1968	Baker et al.	181/36 A X
3,675,734	7/1972	Blatt et al.	181/36 A X

Primary Examiner—Ernest R. Purser

Attorney, Agent, or Firm—Stephen J. Rudy

[57] **ABSTRACT**

A pneumatic tool having incorporated therein a system including an arrangement of passages together with an expansion chamber, a sound resonator chamber, and a plug type screen muffler having internal screens, whereby this system the usual noise accompanying spent air exhausted from the rotor chamber of an air driven blade rotor in the tool is caused to exhaust to atmosphere relatively quietly, without undesirable pulsing, substantially free of undesirable frequencies and at an acceptable decibel level.

5 Claims, 6 Drawing Figures

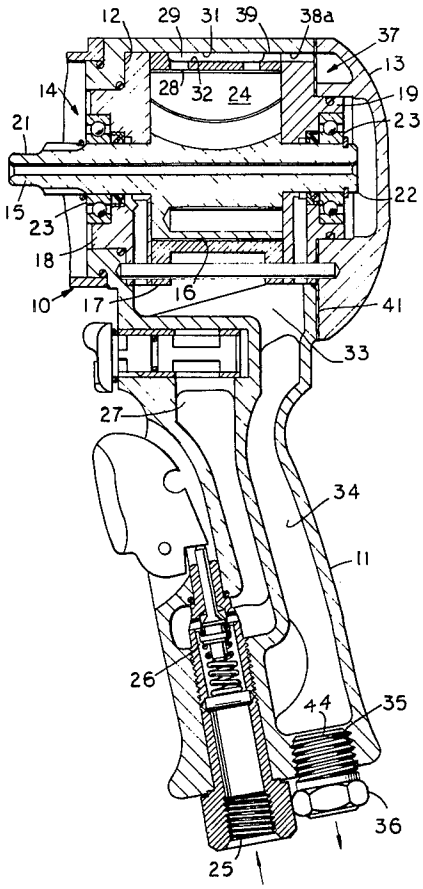

FIG. 4

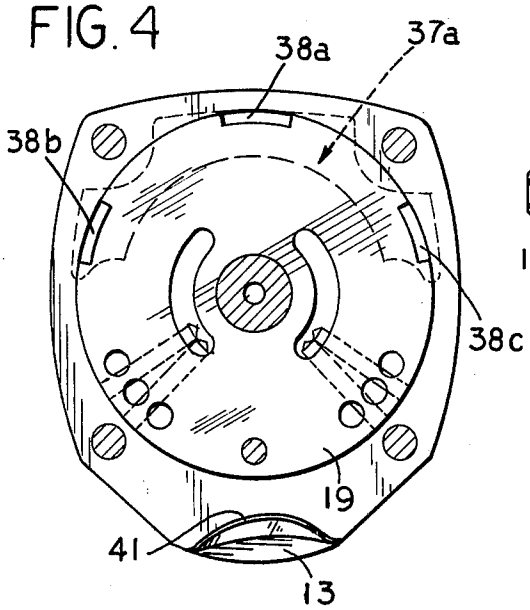

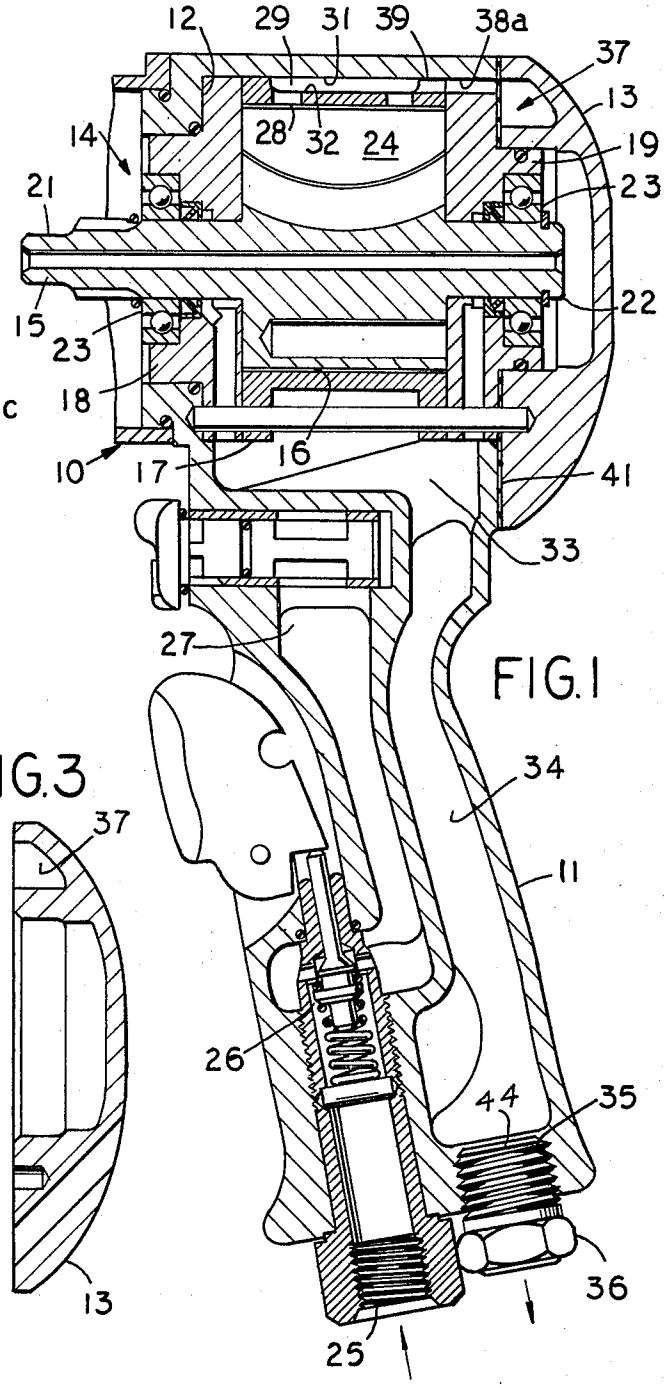

FIG. 1

FIG. 2

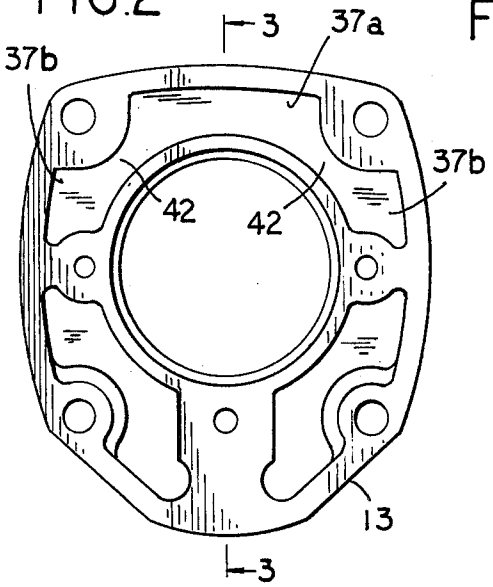

FIG. 3

FIG. 5

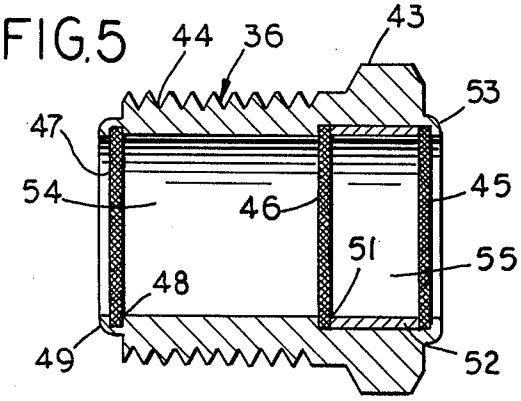

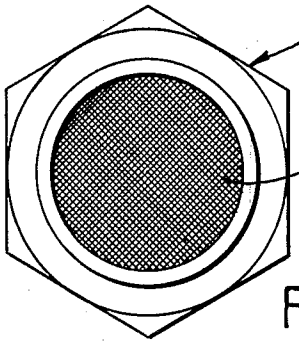

FIG. 6

EXHAUST NOISE ATTENUATING SYSTEM WITH MUFFLER FOR PNEUMATIC TOOLS

BACKGROUND OF THE INVENTION

This invention is concerned with a noise muffler and a system for quieting to an acceptable hearing level the noise that issues with the exhausting air of a pneumatically powered tool of the rotary vane motor driven type.

While the invention is subject to wide application, it is especially suited for use with a portable pneumatically powered tool of the type having a handle through which the air spent in driving the motor exhausts. It is illustrated in this application as applied to a portable pneumatically powered impact wrench.

In tools of this nature, the motor is driven at high speed by air at a constant pressure of 90 psi. The air spent in driving the rotor is rapidly forced by its vanes in rapid succession through exhaust ports to atmosphere with considerable pressure and velocity. Upon expanding outside of the tool to atmosphere, the exhausting air produces an objectionable cacophony of pulsating sounds or noise varying in its frequency, pitch and intensity.

The pulsing of the exhausting air is a characteristic of vane type rotors. As each blade successively passes at high speed over the exhaust ports, it forces or pulses a volume of spent air through the ports. The frequency of this pulsing is determined by the speed of the motor and the number of its blades so that a tool having the usual four rotor blades and operating at a speed of 6000 RPM would produce an exhaust noise wave pattern having a basic frequency of 400 CPS. The speed of the motor and as a consequence this basic frequency will vary during operation of the tool accordingly as the rotor is momentarily slowed and re-accelerated with each impacting action.

The general objective of this invention is to provide means for quieting to an acceptable hearing level the usual noise produced by the exhaust of a pneumatically powered tool of the rotary vane motor driven type.

A further object of this invention is to provide means for muffling the noise produced by the exhausting air without developing undesirable back pressure and consequent loss of power in the tool.

Mufflers for reducing the exhaust noise of pneumatic devices are know from U.S. Pat. Nos. 2,950,775 and 3,675,734, wherein fragile portions of the muffler project externally of the tool and consequently are subject to be broken off or damaged. Others are known from U.S. Pat. Nos. 3,537,543 and 3,384,200 which utilize multiple drilled escape holes for breaking up the exhausting air stream.

Another object of this invention is to provide a muffler of the plug type which is readily attachable to the exhaust port of the handle of a portable pneumatic tool, and which does not have undesirable external projecting portions or multiple drilled air exhaust holes.

The foregoing, as well as other features, objects and advantages of this invention will appear more fully hereinafter from a consideration of the detailed description which follows, taken together with the accompanying drawing wherein an embodiment of the invention is illustrated. It is to be expressly understood, however, that the drawing is for purposes of illustration and description, and it is not to be construed as defining the limits of the invention.

BRIEF DESCRIPTION OF THE DRAWING

In the accompanying drawing:

FIG. **1** is a longitudinal section through a portable pneumatically powered impact wrench illustrating the invention, only so much of the tool being shown as is needed to understand the invention:

FIG. **2** is a detail of the end cap apart from the tool, showing the resonator cavity formed in its inner face;

FIG. **3** is a section on line **3—3** of FIG. **2**;

FIG. **4** is a detail showing the cap element apart from the tool together with the rear end plate and the gasket of the motor assembly in place;

FIG. **5** is an enlarged detail in section of the muffler element apart from the tool; and

FIG. **6** is a view in elevation of the outer or right end of FIG. **5**.

DESCRIPTION OF PREFERRED EMBODIMENT

Attention is now directed to the drawing wherein there is shown in FIG. **1** a portable pneumatically powered impact wrench such as is used in setting threaded nuts in construction work in motor vehicles and in various other applications. The tool has a housing **10** provided with a pistol grip handle **11.** Sandwiched within the housing between an internal shoulder **12** and an end cap **13** is an air driven vane motor assembly **14.**

The motor assembly includes a rotor **15** which is rotatable in a cylindrical chamber **16.** The axis of the rotor is eccentric to that of the chamber. The chamber is defined by an open ended liner **17,** the ends of which are closed over by a pair of end plates **18** and **19.** The rotor is provided with axially extending end shafts **21** and **22** which are supported in the usual bearings **23.**

Rotor shaft **21** is drivingly coupled with conventional nut driving and impacting mechanism (not shown) whereby a nut to which a socket end of the tool may be applied can be initially set and then torqued to a desired tightness by means of a rapid succession of impacting actions.

The rotor is provided with four radially slidable vanes or blades **24** which function in conventional manner under pressure of air entered into the rotor chamber to drive the rotor at a high speed. Air is admitted to the tool through an inlet **25** in the handle, and passes through a manually operable throttle valve **26** to passages **27** connecting through the rear end plate **19** with the motor chamber. Air spent in driving the rotor is exhausted from the rotor chamber through a group of exhaust ports **28,** here two.

The tool is supplied with live air at a constant pressure of 90 psi. The air spent in driving the rotor is accordingly forced rapidly and under high pressure by the rotor blades through the exhaust ports as the blades successively sweep over the wall of the rotor chamber. The flow of fluid through the ports is at a frequency of about 400 CPS, the rotor operating at a speed of 6000 RPM. The fluid is intermittently discharged in pulses with the passing of each blade over the exhaust ports, there being a momentary interval between the passing of each blade over the ports and a consequent drop in the pressure of fluid flow through the ports. There is also a lull and pressure drop in the flow of exhaust air through the ports arising during the momentary lag or interval between impacting actions of the tool. Accordingly, the sound pressure wave imposed upon the fluid flow from the exhaust ports is that of a complex wave

pattern of a pulsating nature varying in amplitude and frequency, and having not only a basic or fundamental frequency but various harmonic multiples thereof.

Were the air in this condition to exhaust directly to atmosphere, it would--upon expanding outside of the tool-- produce an objectionable pulsating noise with varying intensity and pitch accompanied by sounds of irritating low and high pitch.

The characteristics of the exhaust noise that accompanies the operation of the tool is determined by the manner in which the air spent in driving the rotor is exhausted from the rotor chamber, and by the nature of the path which it travels through the tool before exhausting to atmosphere.

The structure of the tool of the present invention and, as a consequence, the path which the exhaust air travels after exiting from the exhaust ports materially affects the pressure of the exhausting air and materially quiets the sounds that accompany it on its exit from the tool to atmosphere, as will now be described.

An annulus **29** is defined between the surrounding wall **31** of the housing and an opposed recessed wall **32** of a groove formed about the periphery of the liner. The exhaust ports **28** are laterally aligned in spaced relation to each other, and open radially through the wall of the liner into the annulus. The annulus connects with a first expansion chamber **33** at a point or bottom of the annulus distant 180° from the exhaust ports. This expansion chamber is located in the main path of the exhausting air, and connects the annulus with a passage **34** in the handle. Passage **34** extends for the full length of the handle and terminates in a port **35** at the bottom of the handle. Fitted with a threaded connection in port **35** is a plug muffler **36.**

Chamber **33** serves as an expansion or sound wave attenuating chamber for the exhaust air at a point where the air leaves the annulus and before it enters the handle passage. It serves in some degree to attenuate the pulsating nature of the exhausting air.

A resonator or sound wave attenuating second chamber, generally designated **37,** is provided in the end cap **13** at the side of the annulus. It communicates with the annulus by means of a plurality of laterally extending throats or narrow ports, here three in number, designated **38***a*, *b* and *c* (FIGS. **1, 4**). Each throat extends through the end plate **19** and through an adjacent land at **39** of the liner to the annulus **31.** A sealing gasket **41** between the cap **13** and the end plate **19** is provided with separate openings registering with each of the throats **38***a*, *b* and *c*.

It is noted (FIG. **1**) that the exhaust ports **28** are located diametrically opposite the lower expansion chamber **33.** This arrangement provides a desirable advantage in initially reducing the pressure energy of the exhausting air with consequent attenuation of the intensity and pulsating nature of the sound waves accompanying the exhaust air. In this respect, as the exhausting air is forcefully driven by the rotor blades through the exhaust ports, it impinges upon the overhead wall **31** of the annulus causing some dissipation of sound wave energy. In this impinging action, the exhausting air breaks up into several main streams, some of which flow clockwise, and the others of which flow counterclockwise about the annulus to the lower expansion chamber **33.** In the latter chamber the oppositely flowing streams meet and expand. Some of the energy of the sound waves is absorbed and dissipated as they are reflected back and forth in the expansion chamber; and as some of them are canceled out.

This division and directional diversion of exhausting air in the annulus and the subsequent re-meeting and expansion of the oppositely moving air streams in the larger volume of the lower expansion chamber tends to modulate the pulsating nature of the exhausting air and to reduce the intensity and amplitude of the sound waves.

The second expansion or sound resonator chamber **37** is located adjacent a side of the annulus and not in the direct path of the exhausting air streams moving about the annulus. It is designed to provide capacitance for the sound waves carried by the exhausting air stream, tending to smooth out its pulsating characteristics.

The resonator chamber **37** (FIGS. **1–4**) extends along the side of the annulus for a distance of substantially 180°. It is centered relative to the exhaust ports so as to extend approximately 90° in a counterclockwise direction and a similar distance in a clockwise direction relative to the exhaust ports. The center one **38**a of the three throats connecting the annulus with the resonator or side chamber is centered on a line extending laterally through the exhaust port **28.** A second one **38**b of the throats is located near one end of the resonator chamber, and the third throat **38**c is located similarly relative to the opposite end of the chamber.

The resonator chamber **37,** in effect, acts as a storage container or capacitor. As spent air flowing through the exhaust ports is diverted by the opposed wall **31** of the annulus in opposite directions about the annulus, it flows over and in part through the several throats **38***a*, *b* and *c* into the side chamber **37.** During the lull between impacts of the impacting mechanism of the tool and during the intervals between the movement of each succeeding blade over the exhausting ports, the consequent pressure drop causes the air stored in chamber **37** to flow back into the annulus where it merges with the exhausting air streams. It thereby tends to smooth out and reduce the characteristic pulsing of the exhausting air. In this respect, the resonator chamber acts as a sound attenuator tending to eliminate undesirable harmonic frequencies above and below the fundamental basic frequency of the sound waves moving with the exhausting air stream.

It is also to be noted that the resonator chamber comprises (as best shown in FIGS. **2** and **4**) a central main portion **37***a* which connects at each end by a means of a pair of necks **42** with opposite end portions **37***b* of the chamber. These end portions are smaller in volume than the central portions **37***a*. This arrangement provides a further advantage. In effect, it provides three separate sound attenuating chambers, each tuned to a separate frequency and each tending to tune out certain undesirable frequencies from the sound waves in the exhausting air.

Accordingly, before the exhausting air stream passes through the muffler **36** at the end of the handle to atmosphere much of its pressure and energy has been dissipated, its pulsating nature has been reduced, and the more objectionable frequencies of the sound waves moving with the exhausting air have been tuned out.

The muffler (FIGS. **1, 5** and **6**) functions to further attenuate the sound waves of the exhausting air. It comprises a hollow open-ended plug or bushing body **43** having a threaded portion **44** engaged in the port **35.**

The interior of the bushing is fitted with an arrrangement of taut screens **45, 46** and **47** which act upon the exhausting air to further attenuate the sounds accompanying it. The arrangement includes an outer end screen **45,** an intermediate screen **46,** and an inner end screen **47,** each extending across the interior of the bushing at right angles to the axis of the latter and in parallel spaced relation to each other.

Each screen is taut and is rigidly retained in place so as to avoid undesirable vibration or distortion under the pressure of the exhausting air. The inner end screen **47** is seated upon a recessed annular shoulder **48** of the bushing and is rigidly held in place by means of a rolled over peripheral end **49** of the bushing. The intermediate screen **46** is seated upon an internal annular shoulder **51.** It is rigidly held in place by means of a sleeve **52** held pressed against the screen under pressure of a retained condition of the outer end screen **45.** The outer end screen is held in seated pressed relation upon the opposite end of the sleeve by means of a rolled over peripheral end **53** of the bushing. It is to be noted that the intermediate screen is located closer to the outer screen **45** than to the inner screen **47.**

In the flow of exhausting air through the muffler, the air is broken up or diffused into numerous streams of lesser volume so that much of its energy and that of the sound waves accompanying it is dissipated. The diffused air passing through the inner screen is reflected back and forth in various directions with consequent loss of energy before passing and being diffused through the intermediate screen. The intermediate screen is preferably located at a point where its distance from the inner screen **47** is twice that from the outer screen **45.** Each of the screens is preferably of about **30** mesh. The sleeve **52** is preferably formed of a soft aluminum material as a further aid in absorbing sound energy.

Upon the exhaust air being diffused through the inner screen **47,** it expands into the long volume chamber or space **54** below accompanied by much reflection and loss of energy. The exhaust air is again diffused with resulting loss of energy upon exiting through the intermediate screen **46** into the volume **55** defined by the sleeve. In this volume, further reflection and loss of energy occurs as the diffused air strikes the wall area of the relatively soft aluminum sleeve **52.** Diffusion of the exhausting air is again repeated as the spent air finally exhausts through the outer screen **45** to atmosphere.

As a result of this particular manner in which the air travels after exhausting from the rotor chamber and finally exiting to atmosphere, the sounds that finally accompany the exhausting air are relatively quiet, steady, without objectionable pulsing, substantially free of objectionable sound frequencies, and at an acceptable hearing level.

It is to be further added that the passages through which the exhausting air travels after leaving the rotor chamber are of sufficient cross-sectional area to accommodate the volume of exhausting air without development of undesirable back pressure or loss of motor power. The passages are free of undesirable baffles, bottlenecks or projections that might undesirably interfere with the free flow of the exhausting air to atmosphere.

It is to be further mentioned that the invention may be applied advantageously to conventional tools without increasing their overall outside dimensions.

Tests have shown a reduction of the sound level below 90 decibels in the operation of a tool embodying the invention.

While an embodiment of the invention has been illustrated and described in detail herein, it is to be expressly understood that the invention is not limited thereto. Various changes can be made in the design and arrangement of the parts of the embodiment without departing from the spirit and scope of the invention as the same will now be understood by those skilled in the art; it is my intent, therefore, to claim the invention not only as shown and described herein but also in all such forms and modifications as may reasonably be construed to fall within the spirit of the invention and the scope of the appended claims.

What is claimed is:

1. A pneumatic tool including an air driven motor comprising a rotor liner defining a rotor chamber having an air driven multiple blade rotor operating therein and having exhaust ports through the liner for the exhaust of driving air from the chamber; a housing for the tool encasing the motor having an end cap at its rear end and having a pistolgrip handle depending from its underside adapted to be held by the operator for maneuvering the tool; and a sound attenuating system through which the exhaust air passes to atmosphere comprising an annular channel around the liner into which the exhaust ports open radially, an elongated exhaust passage extending lengthwise through the handle, an exhaust air expansion chamber connecting the annular channel with an upper end of the passage that extends through the handle, a sound resonating cavity located in the cap at one side of and in parallel relation to the annular channel, a partition wall separating the annular channel from the cavity having a group of laterally extending throat ports communicating the annular channel with the cavity, and a sound muffling plug having a threaded connection with a terminal end of the exhaust passage that extends through the handle.

2. A pneumatic tool as in claim **1,** wherein the sound resonating cavity is of arcuate form extending for substantially **180°** relative to the annular channel and is divided into multiple interconnected sub-chambers each communicating by means of a separate one of the throat ports with the annular channel.

3. A pneumatic tool as in claim **2,** wherein the sub-chambers comprise a central sub-chamber, a pair of end chambers of smaller circumferential extent than the central chamber, a neck passage connecting the central chamber at one end with one of the end chambers, and a second neck passage connecting the central chamber at its other end with the other end chamber.

4. In a pneumatic tool as in claim **1,** wherein the sound muffling plug comprises a hollow open ended bushing body having a cylindrical interior and a threaded external section engaged with a complementary threaded terminal end of the exhaust passage that extends through the handle, a group of circular flat screens fitted across the interior of the bushing and fixed therein in parallel spaced relation to each other and all confined wholly within the interior of the bushing, a first screen of the group being located adjacent an inner open end of the bushing , a second screen of the group being located adjacent an opposite open outer end of the bushing, a third final screen of the group being located between the first and second screens but closer to the second screen, and a soft

metal sleeve being disposed in abutting end relation between the second and third screens.

5. For use in combination with the exhaust outlet of a pneumatically driven air vane motor, a muffling plug for attenuating the sound of exhaust air escaping from the outlet to atmosphere comprising a hollow open ended bushing body having a cylindrical interior and a threaded external section adapted to be threadedly connected in the outlet, and a group of circular flat screens fitted across the interior of the bushing and

fixed therein in parallel spaced relation to each other, in which a first screen of the group is located adjacent an inner open end of the bushing, a second screen of the group is located adjacent an opposite open outer end of the bushing, a third final screen of the group is located between the first and second screens but closer to the second screen, and a soft metal sleeve is disposed in abutting end relation between the second and third screens.

* * * * *