Feb. 13, 1923. 1,444,798

E. A. LAUGHLIN

BUILDING CONSTRUCTION

Filed Feb. 17, 1921 3 sheets-sheet 1

Fig. 1.

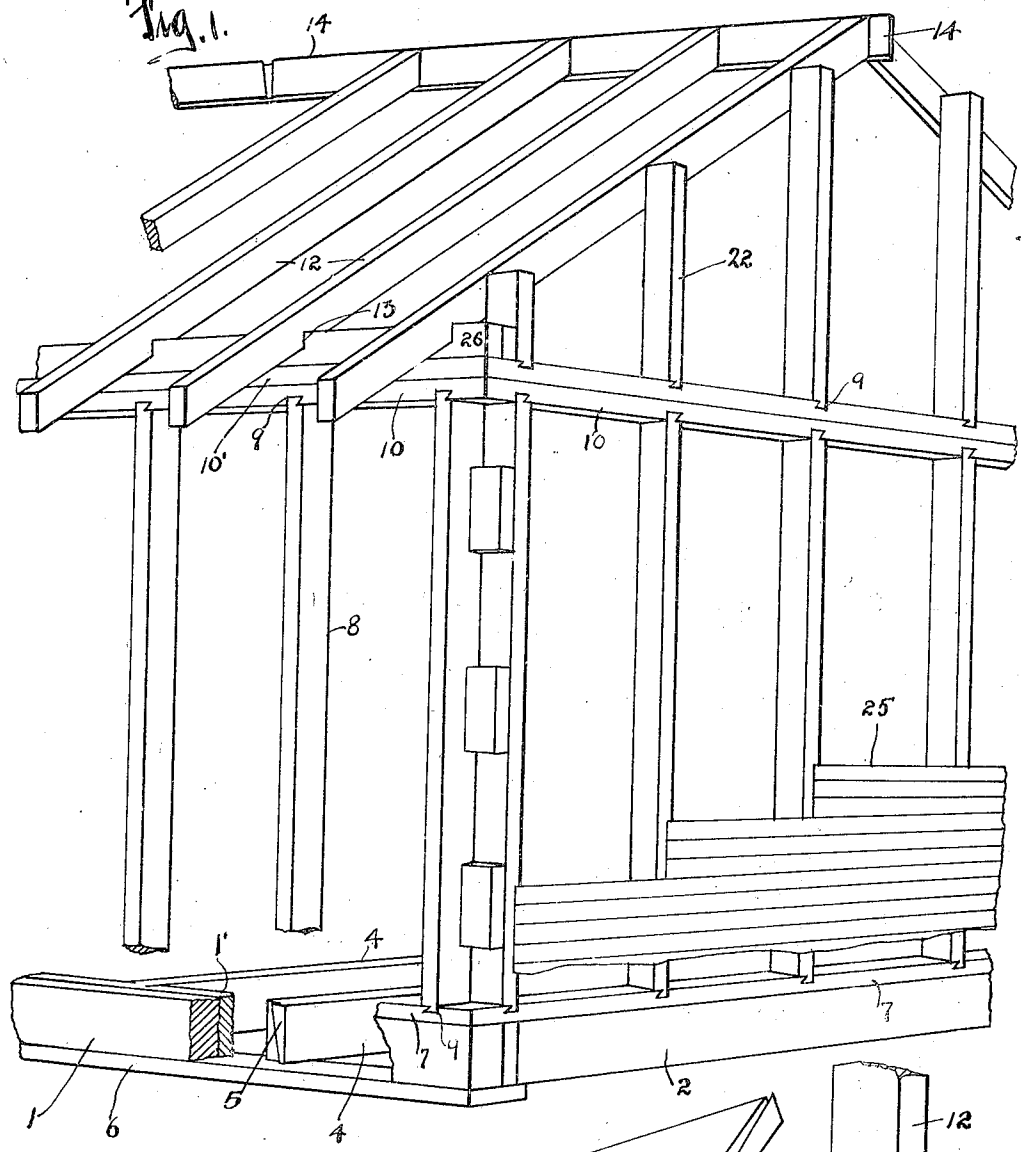

Fig. 4.

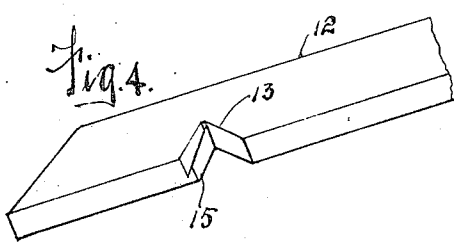

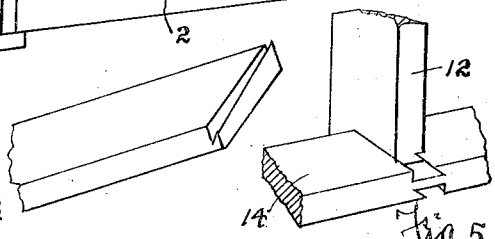

Fig. 5.

E. A. LAUGHLIN, INVENTOR.

BY Jesse R. Stone HIS ATTORNEY.

Feb. 13, 1923.

E. A. LAUGHLIN

1,444,798

BUILDING CONSTRUCTION

Filed Feb. 17, 1921

3 sheets-sheet 2

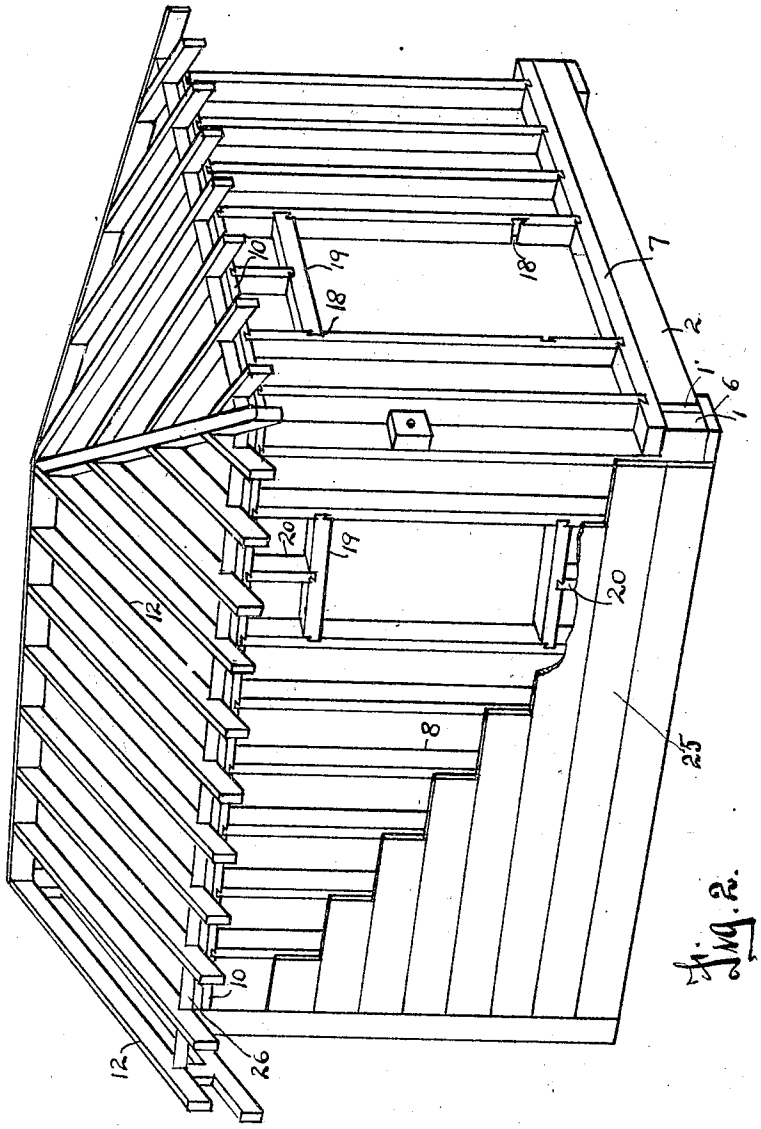

Fig. 2.

E. A. LAUGHLIN, INVENTOR.

BY Jesse R. Stone HIS ATTORNEY.

Feb. 13, 1923. 1,444,798

E. A. LAUGHLIN

BUILDING CONSTRUCTION

Filed Feb. 17, 1921 3 sheets-sheet 3

Fig. 6.

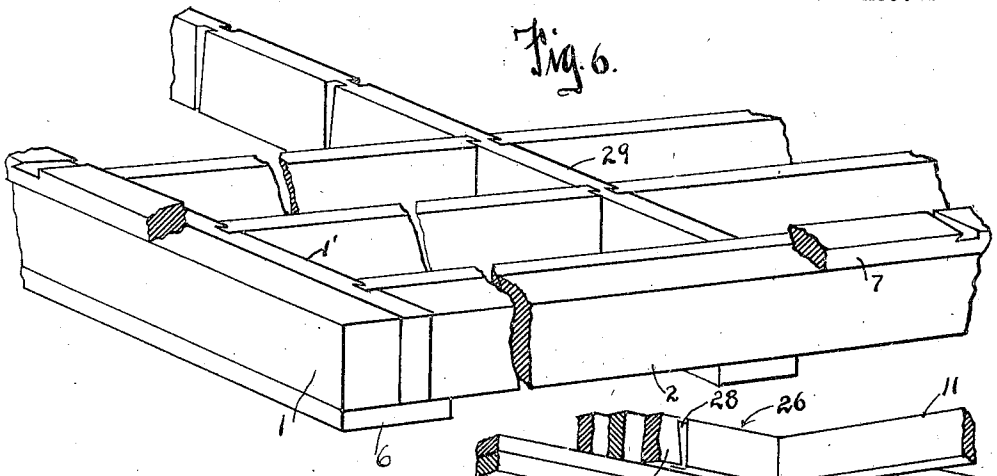

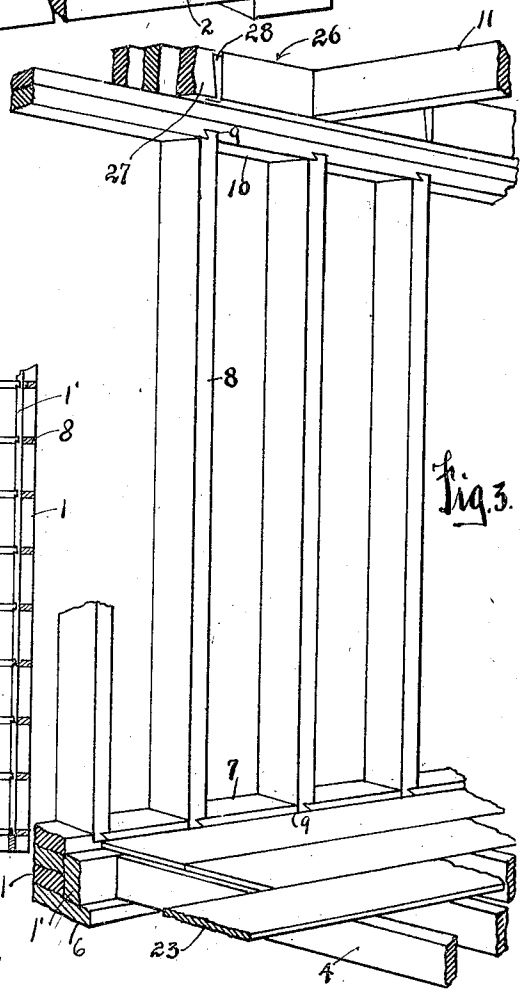

Fig. 3.

Fig. 7.

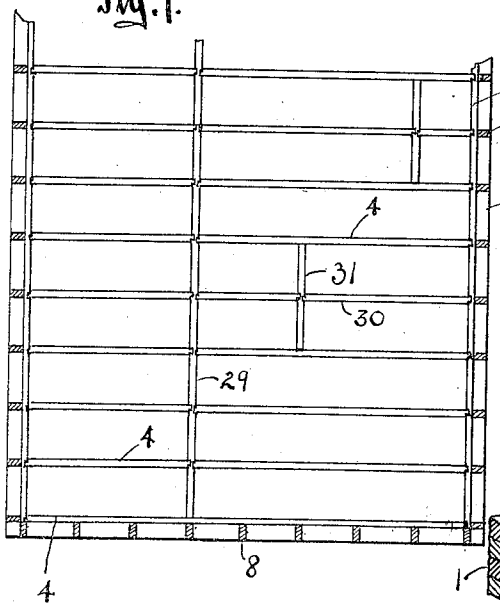

E. A. LAUGHLIN, INVENTOR.

BY Jesse R. Stone HIS ATTORNEY.

Patented Feb. 13, 1923. 1,444,798

UNITED STATES PATENT OFFICE.

EDWARD A. LAUGHLIN, OF PORT ARTHUR, TEXAS.

BUILDING CONSTRUCTION.

Application filed February 17, 1921. Serial No. 445,798.

To all whom it may concern:

Be it known that I, EDWARD A. LAUGHLIN, a citizen of the United States, residing at Port Arthur, Jefferson County, Texas, have invented a certain new and useful Improvement in Building Constructions, of which the following is a full, clear, and exact description, such as will enable others skilled in the art to which it appertains to make and use the same.

My invention relates to a unit-formed system of building construction for the purpose of standardizing and positioning the formed structural members on a unit basis, said standardized members being adapted for use in buildings of varied sizes and dimensions.

One of the objects of my invention is to provide a plan of multiple unit construction wherein I space the members a uniform unit distance apart and by positioning the floor joints, studs, ceiling joists, rafters and other essential members directly in line, one above the other, I make it possible to cut rafters, jack-rafters, gable studs, window and door framing and all dependent members to correct predetermined lengths, which assures absolute fit and wherein like or similar parts are interchangeable and readily adjusted.

Another object is to provide a system of roof construction whereby the parts are dove-tailed together in such manner that the fitting of the parts together is easily and quickly accomplished and the parts may be cut to standards at the mill in large quantities cheaply.

Another object is to so form and position the floor and ceiling plates, and the dadoes cut therein that the studs used for the outer walls will be interchangeable with studs for the inner walls by the simple expedient of making the flooring and ceiling boards of the combined thickness of one of the plates.

Another object is to so form and position side sills, intermediate sills and supporting members that joists can be cut on the unit form basis, from standard lengths of lumber without waste.

Numerous other objects and advantages will be obvious from the description which follows.

Referring to the drawings forming a part of this specification and wherein like parts are designated by like numerals of reference, Fig. 1 is a perspective view of the frame work of a building constructed in accordance with my invention and wherein certain parts are broken away for greater clearness; Fig. 2 is another similar view showing a slightly different type of building employing my invention; Fig. 3 is a broken detail showing my arrangement of plates, studs, joists and ceiling; Fig. 4 is a perspective view of a rafter; Fig. 5 is a broken detail showing the means of attachment of rafter to ridge-board; Fig. 6 is a detail showing my arrangement of floor joists and sills; and Fig. 7 is a floor plan showing how multiple unit length pieces may be worked in when necessary or desirable.

In employing my unit formed system of construction my aim is to so standardize the cutting and shaping of the members employed in the construction of the building that the work on the lumber used may be done almost entirely by machinery at the mill. The position, number, size and shape of the members are all worked out and, by standardization, the similar parts are interchangeable, and capable of being quickly adjusted in position even by unskilled labor. The members thus cut and formed automatically adapt themselves to varied types and designs of buildings with great flexibility.

In working out my plan, reference is made to Figs. 1 and 6, in which I have shown an ordinary type of building. In such construction I term the sill 1 the side sill, and the sill 2 the end sill, there being, of course, two side and two end sills. An inner sill 1′ may be made of a separate piece, if desired, and serve to receive the end of the floor joists. The side sills 1 and 1′ preferably rest on a foundation member 6, which also supports the ends of floor joists 4, generally laid parallel with the end sills 2 and uniformly spaced apart a predetermined unit distance from each other. The floor joists are provided at their ends with tenons 5 which are adapted to fit within mortises or dadoes, in the inner sides of the inner sills 1′, thus providing a dove-tailed connection. As will be obvious these mortises or dadoes may be cut by machinery at the mill and by positioning them at uniform unit distances apart, the floor joists can be quickly dropped into proper position without measurement or cutting on the grounds. The fitting of the tenons in the mortises or dadoes is facilitated by the manner in which

such tenons are formed, the same being under-cut on one side only, and the under-cut portion being deeper on the lower edge of the joist than on the upper edge and the edge of the tenon being inclined to make the lower end narrower. By so doing the smaller end of the tenon drops easily into the wide upper end of the dado and the tenon can thus be forced firmly into place. Few, if any, nails will be required in securing parts together when this method is used.

On the upper edge of the sills 1 and 2 are plates 7, the upper faces of which are mortised at 9 to receive tenons on the studs 8. The mortises or dadoes are uniformly spaced, there being one above each dado in the inner face of the inside sills 1′, thus positioning a stud immediately in line with each floor joist. The studs on the end plate are also spaced the same unit distance apart. As shown particularly in Figs. 1 and 7 the corner studs are spaced from the corner produced by the plates 7 by a distance equal to the width of one stud. This places the first end stud directly over the end of the sill 1′ and the first side sill directly in line with the end of the first floor joist 4. Beginning with the corner studs thus positioned, the matter of spacing the other studs of equal unit distances apart is an easy matter. Therefore, in cutting the dadoes in the sill 1′ for the floor joists this fixing of the starting point for spacing the members must be borne in mind.

The upper end of each of the studs is tenoned to fit within mortises or dadoes 9 in the lower faces of upper plate 10. These dadoes are uniformly spaced so that they lie each in a vertical line directly above the dadoes 9 in the lower plates. The plate 10 is preferably made of two plates as shown, the lower one only being dadoed.

Resting on the plates 10 is a supporting member 26 which is designed to support both the ceiling joists 11 and the rafters 12. It may be one solid timber, but I prefer to form it, as shown in Fig. 3, of a plurality of pieces secured together, by nails or otherwise. The inner of these pieces, designated by the numeral 27, see Fig. 3, projects inwardly beyond the plate 10 and directly in vertical alignment with the inner sill 1′. It is dadoed on its inner face at unit distances apart by mortises 28 to receive the tenoned ends of ceiling joists 11. The dadoes 28 are positioned directly in vertical alignment with the studs 8 and thus carry out my plan of unit spacing and standardization.

Above the ceiling joists are the rafters 12. In the construction shown in Fig. 1, the rafters are all in vertical alignment with the ceiling joists and are notched or recessed at 13 to rest on the supporting member 26. At their upper ends the rafters are provided with tenons fitting within dadoes in the sides of the ridge board 14. This construction is shown in detail in Fig. 5. In Fig. 4 I have shown how the rafters 12 can also be tenoned at 15 to fit within dadoes formed in the outer face of said supporting member 26. The tenon may be formed on either side of the notch 13, but I prefer to form it on the lower side as shown. When thus sawed the rafters can be dropped easily into position interlocking with the ridge board and supporting member and be thus securely and quickly fixed in place.

By my system of multiple unit spacing thus disclosed, it will be obvious that I can construct most economically buildings whose width or length is reckoned in units of 12, 16 or 24 inches, thereby utilizing standard lengths of lumber without waste. Where wide buildings are desired, it is convenient and easy to use more than one sill and different multiple lengths of joist. Thus for buildings employing a 24 inch multiple there may be laid down an intermediate or cross sill 29 (Figs. 6 and 7) and the cut-to-fit tenoned joists for a 12 foot building may be used for a 24 foot building, the intermediate sill being mortised on both sides to receive the tenoned ends. Likewise a ten foot and a fourteen foot set of joists may be also used instead, on the same 24 foot building, or a series of 8 foot stock may be used with two intermediate sills, or, as will be obvious, joists 4, 8, and 12 feet long, respectively, may be employed for the same purpose, the use of my unit formed stock permitting of great flexibility. This idea may also be followed out on walls, ceiling, roofing or wherever desired, as will be apparent. At 30, (see Fig. 7) I have shown how, by this unit spacing, I can use short lengths of joists by simply joining lengths, cut to any multiple of my unit space, and mortised to cross pieces 31, which are in turn secured, by nails if desired, to other joists, as shown. This principle of construction may be used to utilize short lengths of joists, studs, or even of rafters, it being easy to cut said short lengths in multiples of my unit distance and thus adapt them for use wherever desired. Ordinarily, in such construction, the sections 31 will not be tenoned at their ends, thus avoiding the necessity of providing specially sawed and mortised joists 4, or similar members.

In forming openings in the side walls, such as are necessary for windows or doors, I contemplate that, for convenience, said openings will be of a width equal to one or more of the unit distances used in spacing apart the joists, studs, etc., although manifestly this is not essential nor absolutely necessary. Thus, if the unit used is 24 inches, the window or door opening will be two or more units wide. I also contemplate that the windows will be spaced at the same

distance from floor and ceiling plates so that dadoes 18 may be cut in the studs adjacent the windows at equal distances from each end so that the said studs may be reversible. Thus it will not matter which end is used upwardly. The reversibility of the studs is also provided for by cutting the tenons on the ends thereof so that they will fit the dadoes in the plates 7 and 10 no matter which end is upward. Thus the undercut portion of the tenon is on one side of the stud at one end and on the opposite side at the other end. The dadoes 18 provide end-supporting connections to receive tenons on members 19 forming the ends of the window or door frames. Where a door is to be formed, the lower member 19 is omitted as in Fig. 2. Spacing the window openings at equal distances from floor and ceiling allows the use of short or jack studs 20, above and below the said window, thus making it necessary to cut but one length of short stud.

In the use of a hip roof, such as shown in Fig. 2, it is necessary to use short or "jack rafters" at the corners. These corners are called "starters," the rafters having a fixed position in relation to same. Where the angle of slope or pitch of the roof is known, my system of unit construction makes it possible to figure accurately in advance the length of these jack rafters. In standardized construction, it will be at once obvious that these jack rafters may be accurately cut in quantities at the mill and an assured fit always be maintained. Also in the construction shown in Fig. 1, there will be necessary, above the plates 10 at the ends of the building, a series of gable studs 22 of various lengths to support the siding. If the slope or pitch of the roof is standardized, and the unit of spacing known, the lengths of the gable studs will be easily calculated and they can be cut in quantities at the mill and an assured fit be relied upon and the correct number of pieces of each length could be provided. These gable studs can be cut square across on the upper ends thus allowing like lengths to be used on either side of the center. In Fig. 3, I have shown the ceiling joists relative to the floor joists. It will be apparent that they are of equal length because they are parallel and their ends are in vertical alignment. Further, it will be seen that the studs 8 may be used for interior partitions, for when a partition is formed I use flooring and ceiling boards of a combined thickness equal to one of the plates 7. Thus by first laying the floor and ceiling and then putting down top and bottom plates, like plates 7 and the lower members of plate 10, I have so spaced the said plates as to receive the studs 8 without modification. Hence, where it is necessary or desirable to form an interior wall in the building, any of the exterior studs 8 can be used for that purpose, thus making the exterior studs interchangeable.

It will be obvious that the unit formed system, as designed and worked out by me, makes the shaping and working up of the lumber at the mill a problem of easy calculation and makes the standardization of the members practicable. Buildings may be made of any desirable size or form as long as the dimensions are figured in terms of a predetermined unit distance. The type of roof, the gable ends of the house, all of which ordinarily are a source of difficulty in the way of standardization of building construction, will become easy to determine and will no longer trouble the builder. The siding, numbered 25 in the drawings, can be sawed to any unit length. It will thus be possible to use short pieces of boards for siding or flooring which might otherwise be wasted.

The calculation of the number of sills, joists, plates, studs, and rafters, the length and shaping thereof, can be at once determined when the size and form of the building is settled, and when the pitch of the roof, and number of doors and windows is decided. Having the timber cut, grooved and tenoned at the mill results in a great economy of time and renders errors in building construction practically impossible. Unskilled labor can largely be used; a great economy of labor and material will result. Nails will not be needed to the extent now ordinarily used because of the dovetailed connections, and the labor necessary for driving the nails will also be less.

Having thus described my system of unit construction, the further objects and advantages of which will be obvious to one skilled in the art without further description, what I claim as new and desire to protect by Letters Patent is:

1. A unit formed building construction, comprising side and end sills, uniformly spaced floor joists parallel with said end sills and having a mortise connection with said side sills, wall studs, lower and upper plates to which said studs are mortised, ceiling joists centered over certain of said studs, a ridge-board, and rafters centered over said studs and joists and having a dove-tailed connection with said ceiling joists and ridge-board in the manner described.

2. A roof construction for building comprising side plates, ceiling joists connecting said plates, said joists being uniformly spaced and having dovetailed tenons at their ends, fitting in dovetailed mortises in said plates, a ridgeboard, and rafters centered over said joists and having a dovetailed connection with said ridgeboard and said plates.

3. In a building construction, side and end

sills, floor joists connected at their ends with said side sills, lower plates on said sills, upper plates spaced above said lower plates, studs uniformly spaced and having tenons thereon fitting in mortises in said upper and lower plates, said mortises being cut of uniform depths, ceiling joists supported by said upper plates, and ceiling and floor boards of a combined thickness of one of said plates, whereby said studs may be used for interior walls and outer walls interchangeably.

4. In a unit formed building construction, side sills and end sills, plates on said sills and studs on said plates, said side sills having uniformly spaced dadoes on their inner faces, floor joists having tenons fitting in said dadoes, supporting members above said studs having dadoes on their inner faces in vertical alignment with the dadoes on the said side sills, and ceiling joists of the same length as said floor joists tenoned to fit in said dadoes in said supporting members.

In testimony whereof, I hereunto affix my signature, this the 11th day of February, A. D. 1921.

EDWARD A. LAUGHLIN.