April 7, 1942. H. THEILGAARD 2,279,215

ELECTRIC STEAM IRON

Filed May 29, 1939 2 Sheets-Sheet 1

Fig. 1.

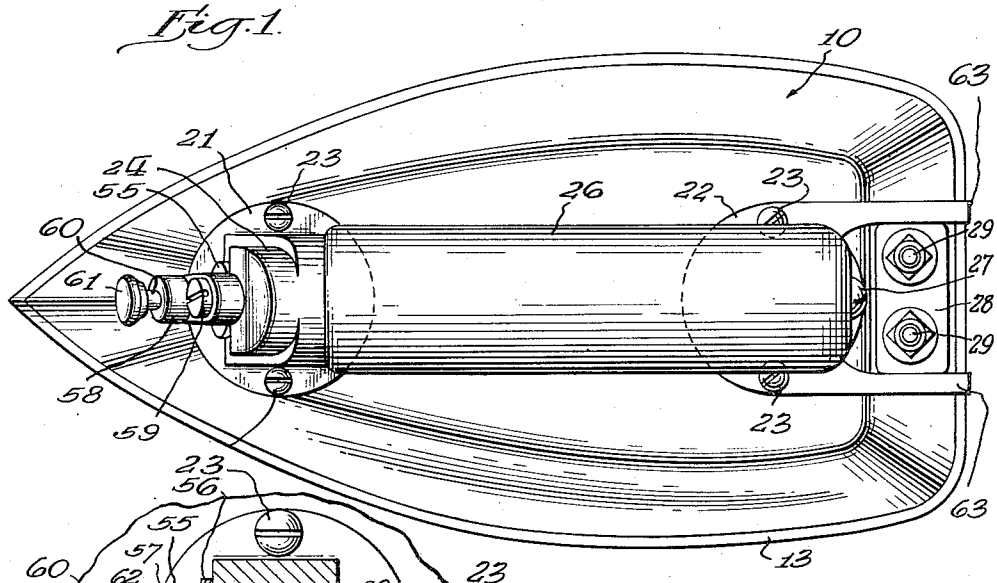

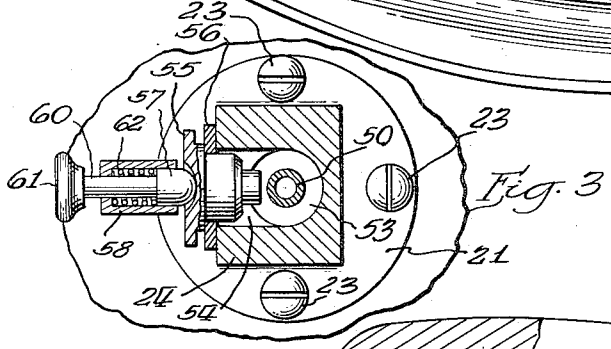

Fig. 3

Fig. 2.

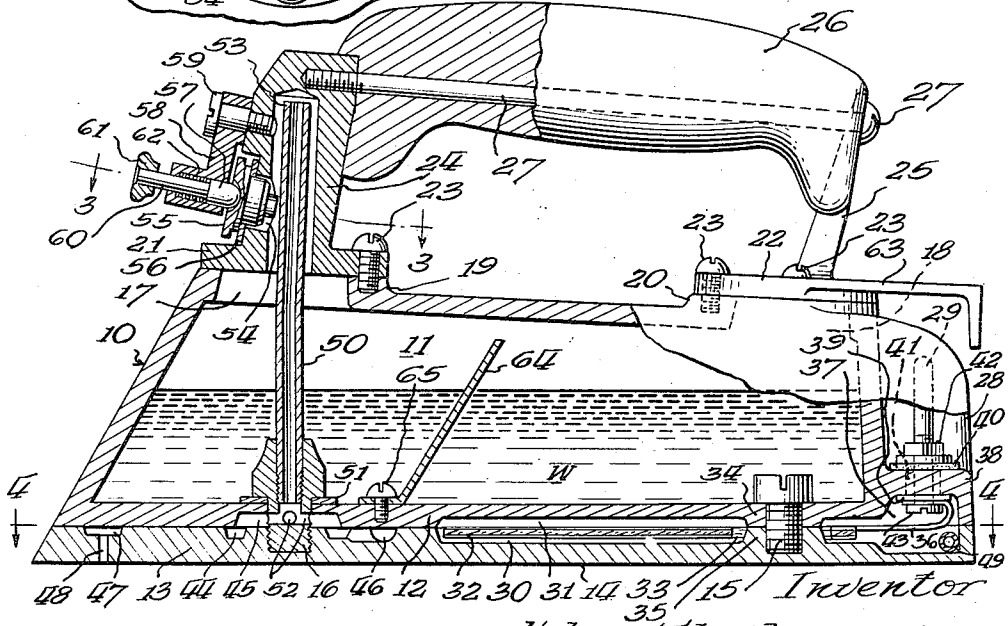

Inventor

By Holger Theilgaard

Marion S. Cayce Atty.

April 7, 1942. H. THEILGAARD 2,279,215

ELECTRIC STEAM IRON

Filed May 29, 1939 2 Sheets-Sheet 2

Fig. 4.

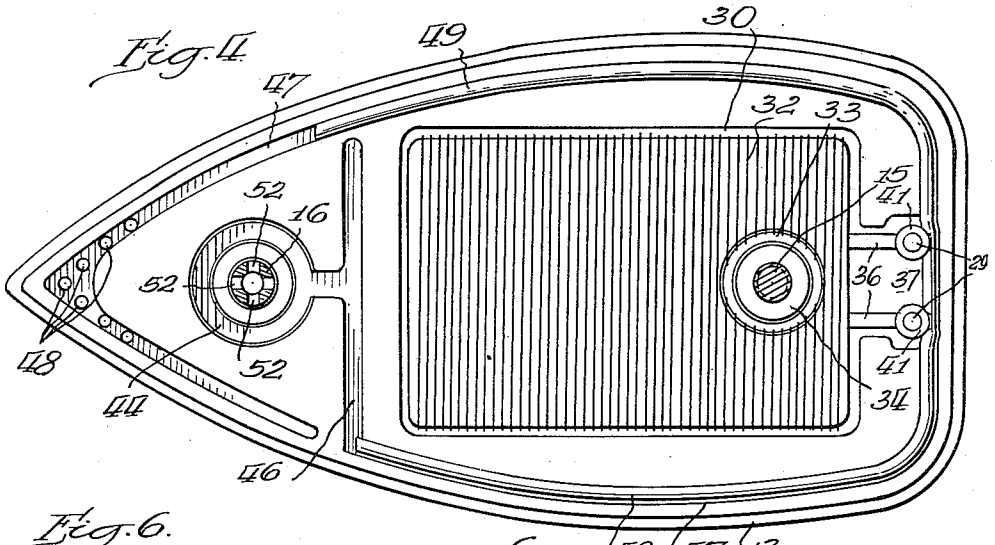

Fig. 6.

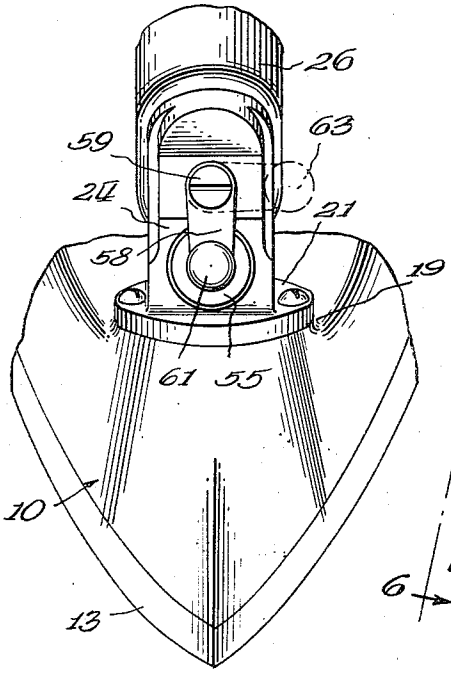

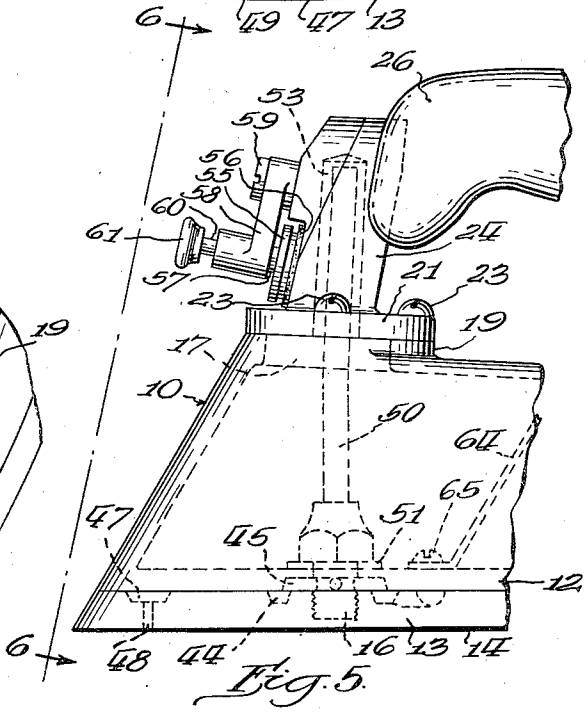

Fig. 5.

Inventor:
Holger Theilgaard
By Marion S. Cayne
Atty.

Patented Apr. 7, 1942 2,279,215

UNITED STATES PATENT OFFICE

2,279,215

ELECTRIC STEAM IRON

Holger Theilgaard, Chicago, Ill., assignor to La Salle Mortgage & Discount Company, a corporation of Delaware

Application May 29, 1939, Serial No. 276,310

1 Claim. (Cl. 220—86)

This invention relates generally to an electric sadiron provided with means for generating steam within itself and adapted to extravasate the same through perforations in the pressing surface thereof while the same is being used.

The invention has for its object the construction of an extremely simple sadiron for the accomplishment of the desired purposes, said sadiron being extremely light in weight by reason of its simplicity.

A further object of the present invention is to provide a sadiron of the character described with a novel blow-off mechanism combined with means for introducing water into said sadiron.

Still a further object of the present invention is to provide a sadiron of the character described, which will be of novel construction in permitting easy access to all parts thereof and consequently easy assembly and dissembly for cleaning and the like.

Still a further object of the present invention is to provide a sadiron of the character described which will have novel means for leading the steam from the steam generating chamber to the extravasating means.

A further object of the present invention is to provide in a sadiron of the character described, novel means for super-heating the steam.

Still a further object of the present invention is to provide a single member which will serve as a support for the handle of the sadiron, will serve as means for attaching said handle to the body of said sadiron, will serve as a steam dome, will be provided with means for introducing water into said sadiron, will be provided with blow-off means, and despite these functions, will be extremely simple in construction and easily replaceable.

With the foregoing and other objects in view which will appear as the description proceeds, the invention consists in certain novel features of construction, arrangement and combination of parts hereinafter fully described, illustrated in the accompanying drawings, and particularly pointed out in the appended claim, it being understood that various changes in the form, proportion, size and minor details of the structure may be made without departing from the spirit or sacrificing any of the advantages of the invention.

For the purpose of facilitating an understanding of my invention, I have illustrated in the accompanying drawings, a preferred embodiment thereof, from an inspection of which, when considered in connection with the following description, my invention, its mode of construction, assembly and operation, and many of its advantages should be readily understood and appreciated.

Referring to the drawings in which the same characters of reference are employed to indicate corresponding or similar parts throughout the several figures of the drawings:

Fig. 1 is a plan view of an embodiment of my invention;

Fig. 2 is a median sectional view of my device with portions thereof in elevation;

Fig. 3 is a sectional view taken along the line 3—3 of Fig. 2 and in the direction of the arrows;

Fig. 4 is a view taken along the line 4—4 of Fig. 3 of the sole of the sadiron in the direction of the arrows;

Fig. 5 is a side elevational view of a portion of my invention;

Fig. 6 is a frontal elevational view taken generally in the direction indicated by the line 6—6 of Fig. 5.

Referring to the specific constructional details, the character 10 designates generally a shell member which is hollow to provide internally thereof a water reservoir 11. The bottom wall 12 of said shell or reservoir 11 is mounted upon a sole plate 13, which forms the pressing surface for the sadiron on the bottom thereof as indicated at 14. The bottom wall 12 and the sole plate 13 are maintained together by means of a screw bolt 15 and a hollow hexagonal headed screw member 16.

The upper portion of the shell 10 is provided with front and rear openings 17 and 18, respectively. Said openings are provided with bosses 19 and 20, respectively thereabout. Mounted upon said bosses 19 and 20 are plate members 21 and 22, respectively. Said plate members are mounted upon said bosses by means of the screws 23. The members 21 and 22 are provided with upwardly extending portions 24 and 25, respectively. A handle member 26 is mounted between the portions 24 and 25 by means of the screw member 27 extending through the portion 25, the handle member 26, and being screw-threaded into the portion 24.

The rear of the shell 10 is further provided with a recess 28 which is adapted to accommodate a plug member, not shown, for engagement with the electrical prong members 29. Said plug member is of a conventional type and leads to an electrical outlet.

Referring now to the operational details, the base plate 13 is provided with a recess 30, which

forms with a similar recess 31 in the wall 12 a hollow chamber in which is disposed a heating element 32. Said element is provided with a circular space 33 which fits about the bossed portions 34 and 35 provided for the insertion therein of the screw bolt 15. Said heating element 32 is provided with leads 36 which extend into a small chamber 37 directly below the recess 28. Said chamber houses the electrical connections between the leads 36 and the prong members 29 which extend thereinto.

It will be noted that the prong members 29 are insulated from the shell wall 38 by means of insulating washers 39 and 40 and an insulating sleeve member 41. The nuts 42 upon the threaded portions of the prong members 29 hold the washers and connections in assembly. It is to be noted further that the prong members are provided with slotted members 43 to facilitate assembly and provide for efficient connection.

The base plate or sole 13 is provided in its upper face with a circular groove 44 about the portion which contains the member 16. The bottom of the wall 12 is provided at this point with a conforming circular groove 45 which combines with the groove 44 to form a circular chamber about the screw member 16. The chamber leads to a groove 46 which connects with a groove 47 about the outer edge of the plate 13. Said groove leads circuitously to the front portion of the sadiron where a plurality of perforations 48 open up to the pressing face 14.

The greater portion of the groove 46 is occupied by a hollow tubular member 49, which permits any steam in the groove to safely pass the chamber 37 without entering therein, as will further be explained below.

The member 16 is hollow and has a tube 15 fitted therein and extending out through the top thereof. The portion of the member 16 which is adjacent to the groove 45 is provided with a plurality of openings 52 which establish connection between the groove 45 and the tube 50. At the point where the member 16 is threaded into the wall 12 the gasket washer 51 is provided to prevent entrance of water directly to the groove 45.

The tube 50 projects into the central hollow 53 provided in the portion 24 of the front member 21. Said hollow 53 acts as a steam dome. The portion 24 is provided on its front face with an opening 54. Said opening is for the introduction of water into the reservoir 11 and is provided with a plug member 55 and washer 56. Said plug member and washer are held in a closed position within the opening 54 by means of a spring plunger 57 contained in the swingable crank arm 58, which is rotatably attached to the portion 24 by the screw 59. Said plunger 57 is provided with a reduced portion 60 and a knob 61 and is normally urged to the right, as viewed in Fig. 3, by reason of the coil spring 62.

When it is necessary to remove the plug member 55, the knob is grasped and pulled outward, moving the plunger to the left, as viewed in Fig. 3, and swung up to one side, as shown by the broken lines 63 of Fig. 6.

It is to be seen that the plug member 55 combined with the spring plunger 57 acts as a safety valve or blow-off, releasing steam when the pressure in the steam dome 53 becomes greater than the pressure exerted by the coil spring 62. Of course, the blow-off pressure may be predetermined by varying the resiliency of the coil spring 62.

The member 22 is provided with a pair of extensions 63 which act as rests for the sadiron when the same is placed on its heel.

A baffle plate member 64 is attached to the wall 12 inside the reservoir 11 by means of the screws 65 to prevent turbulence in the chamber 11 from causing water to splash into the dome 53.

The sadiron operates as follows: The heating element 32 causes the water in the reservoir 11 to boil. The steam generated thereby passes up to the steam dome 53, down the tubular member 50, and into the member 16. From there it passes out through the openings 52 into the grooves 44, 45 and 46. The steam then enters the tubular member 49, which is in close proximity to the heating element 32, and is superheated and dried therein. Said tube leads the steam past the chamber 37 and around to the front portion of the sole of the iron. Here the steam passes into the perforations 48 and is extravasated on to the apparel being pressed by the portion 14 of the sole 13.

It is thus seen that I have presented a simple but efficiently operating electrical steam iron which combines a group of novel and improved features of a highly desirable nature to make an economical fool-proof device.

It is believed that my invention, its mode of construction and assembly, and many of its advantages should be readily understood from the foregoing without further description, and it should also be manifest that while a preferred embodiment of the invention has been shown and described for illustrative purposes, the structural details are nevertheless capable of wide variation within the purview of my invention as defined in the appended claim.

What I claim and desire to secure by Letters Patent of the United States is:

A blow-off mechanism for the steam generating reservoir of a steam sadiron comprising an opening provided in said sadiron and leading to said steam generating reservoir, a plug member seated within said opening and removable to permit the introduction of liquid into said reservoir, a substantially cylindrical housing mounted axially of said opening, a reciprocable member mounted in said housing and having one end thereof engaging said plug member, the other end of said reciprocable member having a grasping portion for the manual manipulation of said reciprocable member, spring means mounted within said housing normally urging said reciprocable member in a direction axially towards said opening to cause said plug member to yieldingly engage against said opening, an arm pivotally mounted on said reservoir and having the housing attached thereto whereby the housing and reciprocable member may be swung to one side of said opening, said plug member being adapted to be moved against the force of said spring means when the pressure within said reservoir reaches a predetermined value.

HOLGER THEILGAARD.