2 Sheets--Sheet 1.

W. J. KEEP.

Improvement in Furnaces for Re-melting Iron and other Metals

No. 132,667. Patented Oct. 29, 1872.

Fig. 1.

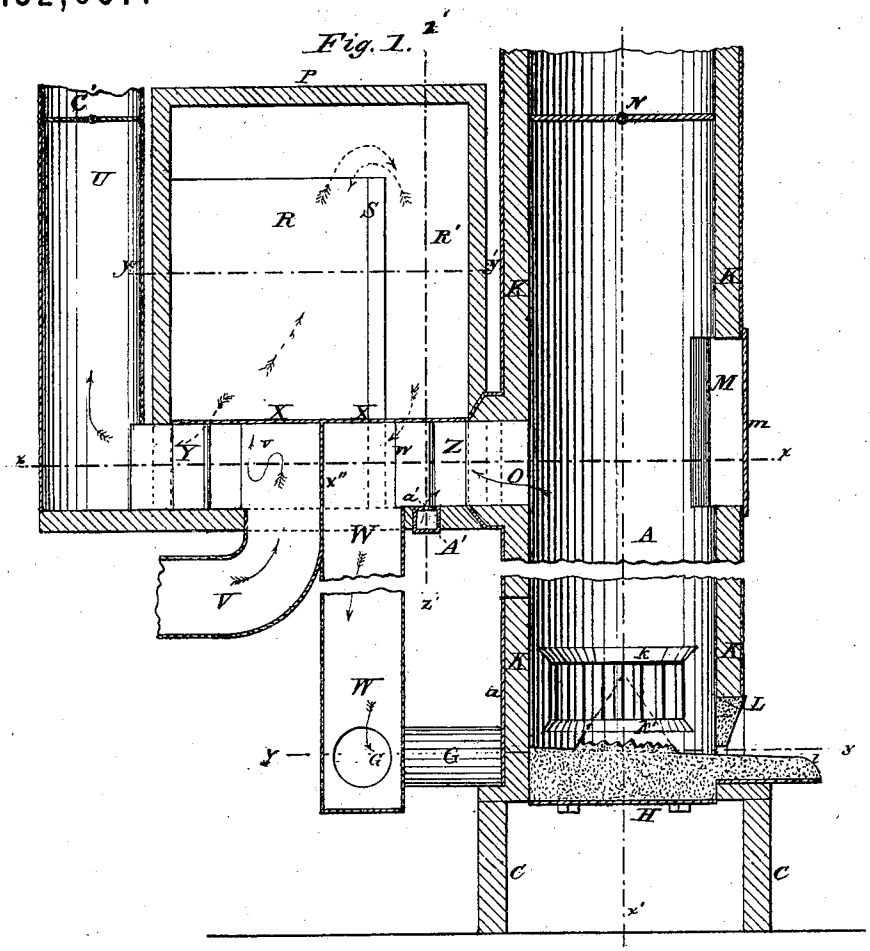

Fig. 2.

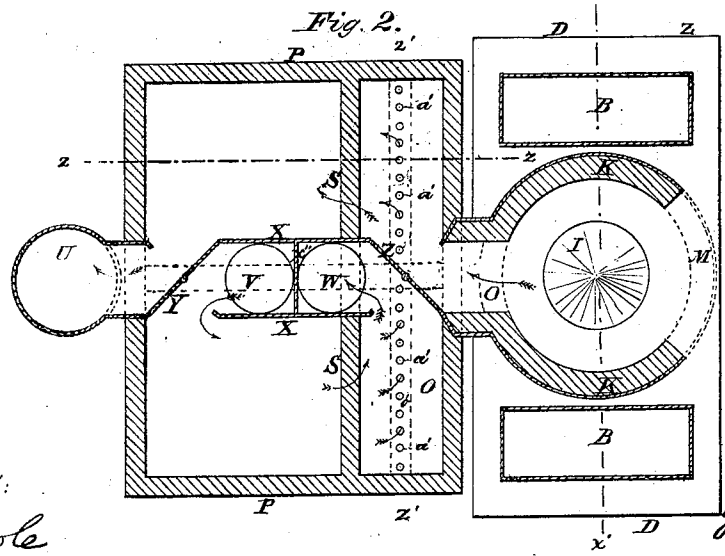

Witnesses:
C. A. Poole
John R. Young

Inventor:
W. J. Keep, by
Pindle and Lee his
attorneys.

AM. PHOTO-LITHOGRAPHIC CO. N.Y. (OSBORNE'S PROCESS.)

2 Sheets--Sheet 2.

W. J. KEEP.

Improvement in Furnaces for Re-melting Iron and other Metals

No. 132,667. Patented Oct. 29, 1872.

Fig. 3.

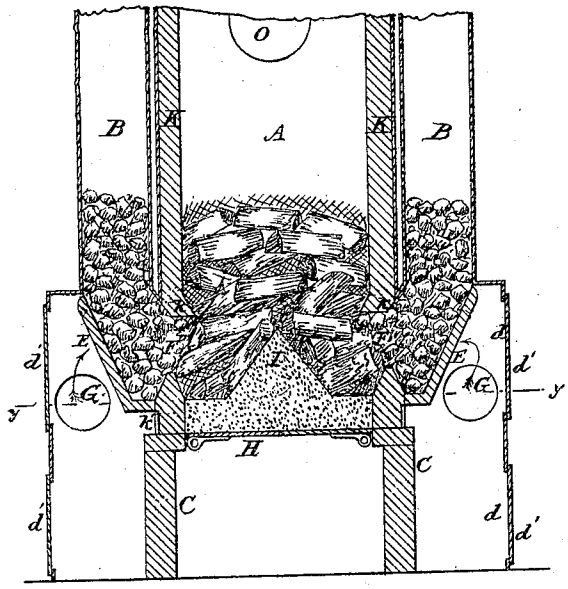

Fig. 6.

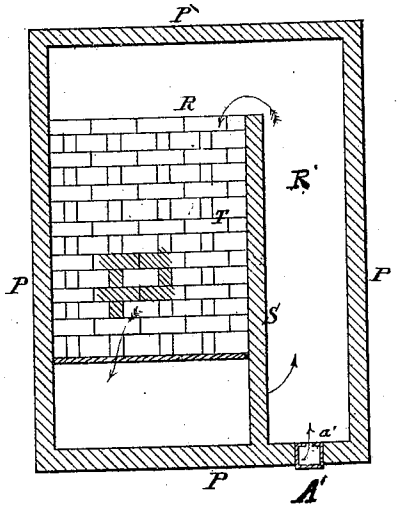

Fig. 4.

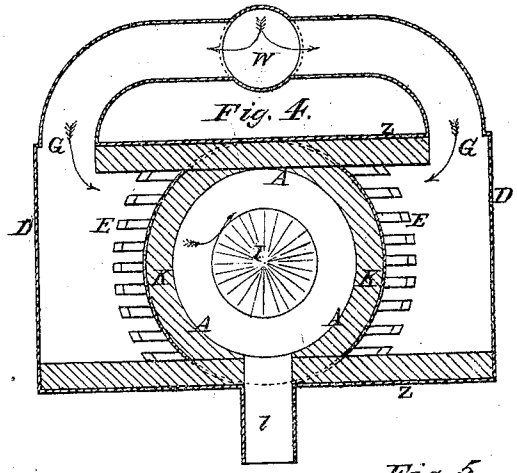

Fig. 7.

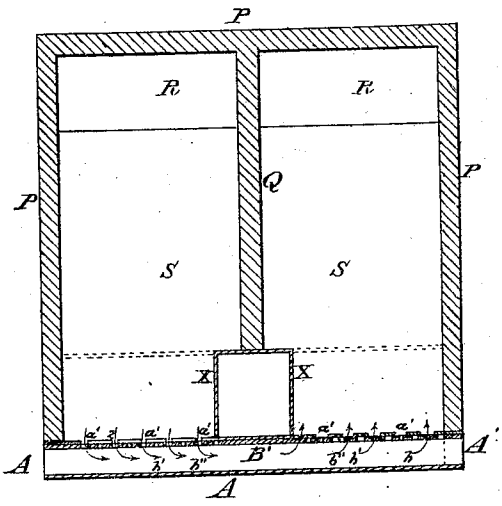

Fig. 5.

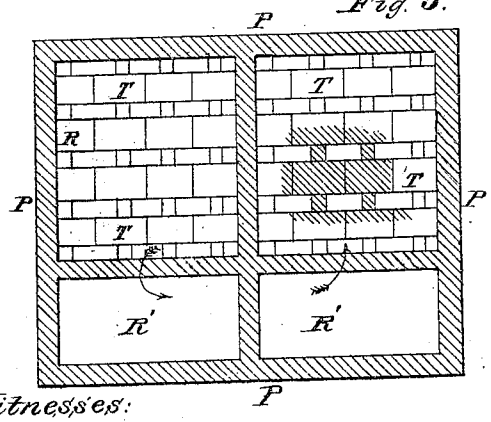

Witnesses:
C. H. Poole
John R. Young

Inventor:
W. J. Keep, by
Prindle and Lawrence
attorneys

A.M. PHOTO-LITHOGRAPHIC CO. N.Y. (OSBORNE'S PROCESS.)

UNITED STATES PATENT OFFICE.

WILLIAM J. KEEP, OF TROY, NEW YORK.

IMPROVEMENT IN FURNACES FOR REMELTING IRON AND OTHER METALS.

Specification forming part of Letters Patent No. **132,667**, dated October 29, 1872.

To all whom it may concern:

Be it known that I, WM. J. KEEP, of Troy, in the county of Rensselaer and State of New York, have invented certain new and useful Improvements in the Method of and Furnaces for Remelting Iron; and I do hereby declare that the following is a full, clear, and exact description thereof, reference being made to the accompanying drawing making a part of this specification, in which—

Figure 1 is a vertical central section of my apparatus upon a line extending from front to rear through cupola, hot-blast oven, and blast-pipe; Fig. 2 is a horizontal section of the same on line *x x* of Fig. 1; Fig. 3 is a vertical section on line *x' x'* of Figs. 1 and 2; Fig. 4 is a horizontal section on line *y y* of Figs. 1 and 3; Fig. 5 is a like view of the hot-blast oven on line *y' y'* of Fig. 1; Fig. 6 is a vertical section of said part on line *z z* of Fig. 2; and Fig. 7 is a like view of the same on line *z' z'* of Figs. 1 and 2.

Letters of like name and kind refer to like parts in each of the figures.

In the use of blast-furnaces of ordinary construction it is customary to charge the fuel and ore alternately in the same cupola or stack, as the intimate contact of the same seem necessary for the complete reduction of the ore. The same method of charging has been employed in remelting-furnaces, except that more care has been exercised so as to have the charge descend to the melting-point in separate layers having greater or less depth according to the caprice of each founder.

While this method seems best adapted to the former case it is productive of many and serious defects to the latter, very great experience and careful attention to minute details being required to avoid the production of hard or weak iron and to prevent great waste and expense.

The fuel in the lower part of the cupola is all that is needed, and that in the upper part, besides occupying valuable space, is wasted rapidly, and passing off in the form of carbonic oxide, materially injures the metal, as with the best of management the forcing of free oxygen over the surface of said metal when in a molten state, causes the same to become oxidized with rapidity.

Further, by close and continued contact with the iron the sulphur and phosphorus given off from the coal are, to a great extent, taken up by said iron, while the ash resulting from the combustion rests upon the molten metal, and forming a fused slag imparts its silicon to the same.

The adjustment of the amount and force of the blast is a very delicate operation, and serious results follow indiscreet management, as by the admission of too much air the melting-point is driven high up in the cupola, while a subsequent diminution of the blast will cause "scaffolding" and clog up said cupola. At the close of the operation it is necessary that the bottom of the cupola should be dropped in order to free it from the remaining iron and fuel, which, together with the slag, fall into the pit and harden into a mass, from which said iron is only separated after much loss of time, labor, and metal.

Another objection arises from the small percentage of the heating properties of the coal, which are utilized, and the consequent low temperature obtained, (the escaping gas being carbonic oxide, which indicates but three-sevenths of the temperature obtained where such escaping gas is carbonic acid,) as when No. 1 quality of iron is used for charging the product is a lower grade, (No. 2 or 3,) said result being due to the low temperature, as it is found that in the manufacture of iron a high heat produces a high grade of metal, while with a low temperature a corresponding reduction in quality of metal results; and, further, that by subjecting a low grade of iron to the degree of heat necessary to produce a higher grade such iron is changed in quality and raised to the higher standard or grade.

From the above it follows that if a cupola melted at a temperature corresponding to that to which the iron was subjected at the time of its manufacture the grade of said iron would not be changed, and consequently the same quality might be used that was required in the castings; and, further, that where large cupolas are now used for melting iron at a low temperature a much smaller cupola would answer the same purpose if a higher temperature were employed.

The object of my invention is to remedy these and other defects heretofore existing in the method and apparatus employed for re-

melting iron so as to enable the operation to be performed with greater economy and rapidity; to which end said invention consists, principally, in the method employed, substantially as and for the purpose hereinafter specified. It consists, further, in a cupola or remelting-furnace, constructed with two or more cylinders, one of which is for containing the metal to be operated upon, and the others the fuel for combustion when the same are so arranged as that said metal and fuel shall descend by the force of gravity as rapidly as the former melts and the latter consumes, so as to keep up a constant supply of said articles at the melting-point, substantially as and for the purpose hereinafter shown. It consists, further, in constructing the lower end of the fuel-magazine of or from bars so arranged as to form a grate upon which the fuel burns and through which the ashes and scoria fall, substantially as and for the purpose hereinafter set forth. It consists, further, in the peculiar construction of the bed-plate of the cupola, by means of which a receptacle is formed for containing molten metal, and ashes are prevented from falling into the same, substantially as is hereinafter shown and described. It consists, further, in the peculiar construction of said bed-plate, whereby the heat of or from the fuel is concentrated and caused to reach all of the metal, substantially as and for the purpose hereinafter specified. It consists, further, in contracting the whole or a part of the cupola immediately above the blast-openings so as to concentrate the heat and also prevent the molten iron from dropping into the fuel, substantially as is hereinafter shown. It consists, further, in the peculiar construction of the hot-blast oven, substantially as and for the purpose hereinafter set forth. It consists, further, in the peculiar construction and arrangement of the inlet and outlet passages of said oven and the means employed for controlling the same, substantially as and for the purpose hereinafter shown and described. It consists, further, in the means employed for supplying oxygen to the heated escaping gases for the purpose of perfecting the combustion of the same, substantially as is hereinafter specified. It consists, further, in the means employed for changing the course of the escaping gases from the upper end of the cupola to the hot-blast ovens or chambers, substantially as and for the purpose hereinafter shown. It consists, finally, in a cupola provided with a removable portion for the purpose of affording access to the interior of the same, substantially as is hereinafter set forth.

In the annexed drawing, A represents a chamber for containing iron, and B and B two fuel-chambers, arranged, preferably, upon opposite sides of the same, said parts being placed in a vertical position and having any desired shape or area in horizontal section. The central chamber A rests upon and is supported by means of suitable foundation-walls, C, while the fuel chambers or magazines B rest upon a casing or housing, D, which has, preferably, a rectangular shape and incloses the lower ends of said parts, as shown in Figs. 1 and 3. The magazines B have impervious walls to or just below the upper end of the housing D, from whence downward, to or near the lower end of the cupola, the inner side of each is removed and its outer side composed of grate-bars E, that incline inward and downward toward said cupola, the walls of which are removed so as to form openings F, that connect the lower end of the same with said magazines. The grates E are preferably made adjustable toward or from the cupola so as to vary at will the horizontal thickness of the fuel contained between the same, and enable anthracite or bituminous coal to be burned, either as lumps or powdered. The housing D is provided with two or more openings, *d*, upon opposite sides, for the purpose of stoking the fire, removing ashes, &c., which openings are tightly inclosed by means of corresponding doors *d'*, while a supply of air, for the purposes of combustion, is admitted through suitable openings G constructed in and through the rear side of said housing. The lower end of the cupola is inclosed in the usual manner by hinged doors H, which are covered by sand or fire-clay, said covering being extended upward at the center in the form of a cone, I, to a point near the upper edges of the openings F for the purpose of contracting the hearth, concentrating the force and heat of the blast, and giving to the latter an upward inclination. The interior of the walls of the cupola are lined with fire-brick K, which, from a point just above the openings F, extend inward and downward, so as to form boshes *k*, that contract the internal diameter of the cupola at that point so as to compel the melted iron to drop inside the line of said wall and prevent it from passing outward into the magazines. Another effect of the boshes is to concentrate the heat and increase the force of the blast. Below the boshes the lining K extends upward to a point about one-fourth the distance from the lower to the upper side of the openings F, so as to form a dam, *k'*, which prevents the molten iron from passing into the magazines. Said openings F may have any desired size, but it is better to extend them laterally than vertically so as to keep the melting point low down. The tymp or breast L is constructed as usual of sand or clay, as is also the spout *l*. An opening, M, is provided in and through the wall of the cupola for the purpose of charging the same, and when not in use is tightly inclosed by means of a door, *m*. Upon the rear side and near the lower end of the cupola a portion, *a*, of its wall is made removable for the purpose of affording access to its interior when necessary to effect repairs.

In order that the usual loss occasioned by the escape of heated and combustible gas

may be avoided, a valve, N, is fitted to the upper end of the cupola so as to enable the same to be closed, and an opening, O, provided in and through the rear wall of the same, through which said heated gases may pass into an oven for heating the blast, which oven is constructed upon the regeneration principle, as described below.

As seen in the drawing, the oven consists of a rectangular casing, P, which extends upward from the lower side of the opening O, and is divided by means of a central partition, Q, extending from front to rear, into two compartments, R, which latter are subdivided by a cross-partition, S, so as to form at the front side of the oven two smaller compartments, R′, that communicate at their upper ends over said cross-partition with said rear compartments R. The rear compartments R are filled with loosely-piled fire-brick T, from a point upon a line with the upper edge of the opening O to or near the upper edge of the partition S, and are connected at their lower ends and rear sides with the exit-flue U, while the front chambers R′ are unobstructed, and are connected at their lower ends and front sides to or with the interior of the cupola, so as to cause the heated escaping gases to pass upward through said chambers R′ into the chambers R, and downward through the latter into said exit-flue, said gases having, during such passage, imparted to the brick T and the lining of the oven a large percentage of their temperature. The cold-air pipe V and blast or hot air pipe W enter the lower side of the oven at its transverse center, and open into a housing, X, which is divided by means of a cross-partition, x'', into two compartments, v and w, which open, respectively, to the rear and to the front. Two butterfly-valves, Y and Z, are pivoted vertically within the spaces left between the ends of the housing and the contiguous walls of the oven, in such a manner that when placed diagonally in either direction each valve shall extend between one wall of said housing and the opposite side of the opening O or U to or from said oven, and cut off communication between one of the compartments R or R′ and said openings. By connecting the valves together, so as to cause them to be moved simultaneously, the current of heated escaping gas can be instantly changed from one set of compartments to the opposite set, while, as seen in Fig. 2, the course of the current of cold air will also be changed by the same manipulation.

As thus arranged, it will be seen that while the heated gases are passing through and heating the compartments upon one side of the oven, the air-blast enters the opposite heated side through the pipe V, passes upward, through the rear chamber R, into and downward through the front chamber R′, and from thence into the hot-air pipe W, and through the same into the cupola, said air having during such passage abstracted from the lining and loose brick of the compartments so large a percentage of their heat as to raise its temperature to about 1400° Fahrenheit. After the temperature of one set of compartments has become too low, and that of the opposite set has been raised to a high point, the position of the valves is reversed and the cooled chambers reheated, while the heated chambers are being cooled by the air-blast.

In order that the combustible gases thrown off from the cupola may be consumed and their heat utilized within the oven, an air-duct, A′, is formed upon the lower side of the casing P, immediately beneath the transverse center of the chambers R′, with which chambers communication is effected by means of a series of small openings, a', that are formed in and through the bottom of said casing. As thus arranged, the pressure of the blast forces air downward through the openings upon one side of the valve Z into the duct A′, from whence it passes upward into the chamber R′ upon the opposite side of said valve, where, meeting the escaping gases, said air is thoroughly intermingled therewith, and supplies the requisite oxygen to cause said gases to burn with an intense heat.

As it is desirable that a full stream of air should leave each of the openings a', a slide, B′, is placed within and bears against the upper side of the duct A′, and is provided with two series of openings, b' and b'', the first of which, b', corresponds in diameter to or with the openings a', while the second series, b'', are somewhat smaller than the same. The relative positions of the openings are such that when the openings a' and b' coincide upon one side of the valve Z, the openings a' and b'' coincide upon the opposite side of said valve, so that by so arranging the slide B′ as to cause the large openings in use to always be upon the air-blast side of the oven, it will be seen that air will be freely admitted to the duct A′, while, as the small openings in use are upon the opposite side of said oven, the escaping air will be concentrated, its velocity increased, and a full stream insured for each opening. A valve or damper, C′, placed within the exit-flue U, enables the same to be sufficiently closed to insure any degree of pressure within the cupola and oven less than the pressure of the blast, by which means the latent heat of the expanding air becomes apparent and is caused to remain.

In "taking off a heat" the operation is as follows: The cupola is filled with iron and the magazine with fuel, and the latter ignited at the grates. The air-blast is now started, and, passing through the grates into the cupola, carries with it the flame and heat from the burning fuel, which soon raises the temperature of the iron to the melting-point. As the iron at the lower end of the cupola melts that from above settles down and takes its place, while the heat not used for melting the metal below passes upward and is partially absorbed by the metal above, the remaining heat passing into the oven with the gas. As

the fuel burns away that from above settles down and in turn is consumed, so that the supply of heat is rendered constant. The more rapidly air is forced into the cupola the greater will be the heat generated and the more rapid the melting. If too rapid melting takes place the force of the blast can be reduced or said blast stopped without causing damage. The cupola may be allowed to cool down and again started when iron is next required. If slag forms in the cupola it may either be drawn off through the iron tap-hole or through a separate opening. Should an oxidizing flame be formed the grates must be moved further from the cupola, so as to increase the thickness of the column of coal and correspondingly increase the consumption of the same. If desired, the coal may be permitted to touch or partially mix with the iron at the bottom of the cupola; but it is thought best to keep them separate.

The apparatus thus described is believed to possess in a marked degree desirable qualities, while it is free from most if not all of the objections heretofore existing.

Having thus fully set forth the nature and merits of my invention, what I claim as new, is—

1. The hereinbefore-described method of melting iron, substantially as and for the purpose specified.

2. In a remelting-furnace, two or more cylinders for containing, separately, the metals to be operated upon and the fuel for combustion, when the same are so arranged that said metal and fuel shall descend by the force of gravity as rapidly as the former melts and the latter consumes, so as to keep up a constant supply of said articles at the melting-point, substantially as and for the purpose shown.

3. In a remelting-furnace in which separate cylinders are employed for containing the metal and fuel, a fuel-magazine having its lower end formed of or from grate-bars, substantially as and for the purpose set forth.

4. The peculiar construction of the bed-plate of the cupola A, by means of which a receptacle is formed for the reception of molten metal, and ashes are prevented from falling into the same, substantially as shown and described.

5. The peculiar construction of the bed-plate of the cupola, by means of which the heat from the fuel is concentrated and caused to reach all of the fuel, substantially as specified.

6. In a remelting-furnace in which the fuel is contained within a magazine separate from the compartment for containing the metal, a cupola having the whole or a part of its interior contracted immediately above the blast-openings, substantially as and for the purpose shown.

7. The hot-blast oven P, in which the compartments R and R′ and the valves Y and Z are arranged, substantially as and for the purpose set forth.

8. The inlet and outlet passages of the hot-blast oven O and U, respectively, when arranged as shown, and controlled by means of the valves Y and Z, substantially as and for the purpose shown and described.

9. The air-duct A′, provided with the openings *a′*, arranged within or upon the hot-blast oven, and combined with the slide B′, provided with the series of openings *b′* and *b″*, substantially as and for the purpose specified.

10. In combination with the hot-blast oven and cupola, constructed as described, the valve N pivoted to or within the upper end of said cupola, and the valve C′ pivoted within the exit-flue U, substantially as and for the purpose shown.

11. In a remelting-furnace, a cupola provided with a removable portion of its wall, substantially as and for the purpose set forth.

In testimony that I claim the foregoing I have hereunto set my hand this 10th day of June, 1872.

WILLIAM J. KEEP.

Witnesses:
T. S. MILLER,
H. T. GAY.